International Journal of Engineering & Technology, 7 (1.1) (2018) 418-420

International Journal of Engineering & Technology

Website: www.sciencepubco.com/index.php/IJET

Research paper

Modulation diversity for differential amplitude and phase shift keying technique

M. Kanthimathi [1] *, R. Amutha [2], S. Anusha [3]

[1] *Department of ECE, Sri Sairam Engineering College, Chennai, Tamil Nadu, India*
[2] *Department of ECE, SSN College of Engineering, Kalavakkam, India*
[3] *Department of ECE, Sri Sairam Engineering College, Chennai, Tamil Nadu, India*
**Corresponding author E-mail:*

Abstract

Modulation diversity can reduce the bit error rate in fading channels. We make use of the advantage of modulation diversity in non-coherent differential modulation technique. Increase in modulation diversity is obtained by rotating signal constellation. Coordinate interleaved Differential amplitude and phase-shift keying modulation (DAPSK) is particularly advantageous compared to the Differential phase-shift keying (DPSK) technique. Energy optimization is done to minimize the energy consumption. Simulation results shows that the proposed differential detection for different rotation angle achieves better BER performance than constant phase differential detection with modulation diversity. The energy required to successfully transmit a bit is also reduced for proposed system compared to Differential phase shift keying based system.

Keywords: *Signal Space Diversity (SSD); Differential Detection; Wireless Sensor Network (WSN); Energy Efficiency; Spectral Efficiency.*

1. Introduction

Signal space diversity combined with differential detection is very effective in scenario where actual channel state information is difficult to achieve. It also eliminates the pilot symbols for estimating the channel information and equalization. Spectrally efficient technique such as DAPSK is advantageous compared to Quadrature amplitude modulation (QAM) in distortion environment where signal compression take place and this is explained in [1]. In signal space diversity technique the diversity order of the signal set is increased by rotating the constellation points. The constellation set is expanded by interleaving the real and imaginary component of each constellation point independently. As the dimension of the signal set is increased there is less possibility of errors due to compression in the signal set caused by the fading effects and this is analyzed in [2]. The expansion in the signal set results in improved gain in the fading channel compared to the non rotated constellation set.

Non-coherent transmission is particularly useful in fast fading channel as perfect knowledge of the fading coefficients is difficult to achieve. Differential space time modulation was proposed to avoid channel estimation at the receiver for fast fading channel in [3]. MDPSK modulation with time diversity using a repetition code was proposed in [4] but this method required additional. Differential detection bandwidth with multiple antennas is analyzed in [5]. DAPSK modulation was considered to transmit high data rate in terrestrial digital transmission system [6]. The modulation techniques to overcome non-linear effects due to high power amplifiers at the transmitter are illustrated in [7], [8]. Non-coherent technique in amplify-and-forward relay network is proposed in [9]. Non-coherent space time modulation is studied in [10]. Transmit energy and circuit energy analysis of SISO and virtual MIMO systems for different modulation schemes are done in [11]. The performance of component interleaving in signal set is analyzed in [12]. The benefits of co-operation in single-hop and multi-hop network are explained in [13]. In [14] and [15], a space-time coded cooperation to reduce energy consumption was introduced by the authors. In [16], transmission delay, energy-delay cost and consumed energy per bit is minimized by applying chain based protocols.

In this work we combine the benefits of signal space diversity in DAPSK modulation scheme in block fading channel. We derive optimization based on the signal constellation parameters to minimize the required energy and analyze the energy consumption per bit for the differential detection technique. To the best of our knowledge differential modulation diversity was not employed in DAPSK modulated signals.

The paper is framed as follows. In Section II we illustrate the energy optimization procedure and system model adopted for the analysis of differential modulation diversity for DAPSK modulation system. In section III we analyze differential detection equations for the DAPSK system and the energy analysis for the DAPSK with modulation diversity. Simulation outputs are discussed in section IV. Finally, conclusive remarks are reported in section V.

2. DAPSK energy consumption

Energy optimization

Data bits are differential mapped into DAPSK symbol as expressed in Equation 1. At the receiver symbol detection is done separately estimating the amplitude and phase angle between the present and the previous symbol given in Equation 2. The rotated constellation is achieved by multiplying the mapped signal with the rotation matrix given in Equation 3. The wireless channel is modelled as a Rayleigh flat fading. A component interleaver is used at the transmitter to independently interleave the in phase and quadrature

Copyright © 2018 M. Kanthimathi et al. This is an open access article distributed under the Creative Commons Attribution License, which permits unrestricted use, distribution, and reproduction in any medium, provided the original work is properly cited.

phase component to enable expansion of the signal set. The component interleaver performance is important to achieve gain in modulation diversity system. Perfect phase recovery is assumed at the receiver.

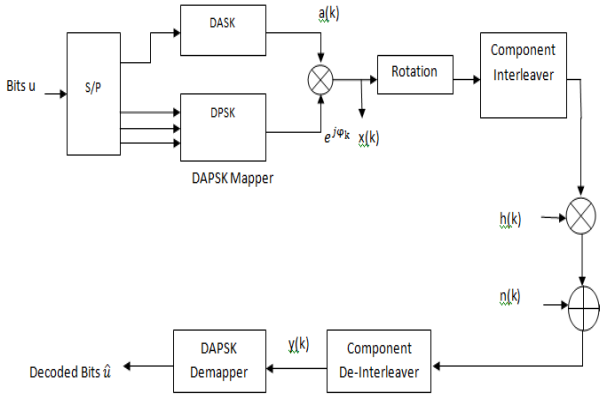

Fig. 1: System Model of the Proposed DAPSK Modulation Diversity

The bit error probability of DAPSK in Gaussian channel is summation of bit error probability of DPSK and DASK and is given in Equation 4. The error probability of DPSK is given in Equation 5 and the error probability of DASK is given in Equation 6.

$$d_k = a_k \exp(j\varphi_k) = s_k\, d_{k-1} \tag{1}$$

$$\hat{s}_k = \hat{d}_k / \hat{d}_{k-1} = \left(\hat{a}_k / \hat{a}_{k-1}\right) \exp\left[j(\hat{\varphi}_k - \hat{\varphi}_{k-1})\right] = \hat{r}_k \exp(j\Delta\hat{\varphi}_k) \tag{2}$$

$$T = \begin{bmatrix} \cos\theta & -\sin\theta \\ \sin\theta & \cos\theta \end{bmatrix} \tag{3}$$

$$P_{M-DAPSK} = \frac{1}{\log_2 M}\left[\log_2 M_1\left(P_{M_1-DPSK}\right) + \log_2 M_2\left(P_{M_2-DASK}\right)\right] \tag{4}$$

$$P_{M_1-DPSK} = \frac{1}{2}\left[\frac{1}{\log_2 M_1} Q\left\{\frac{2}{\sqrt{1+a^2}}\sqrt{\frac{S}{N}}\sin\left(\frac{\pi}{\sqrt{2M_1}}\right)\right\} + \frac{1}{\log_2 M_1} Q\left\{\frac{2a}{1+\alpha^2}\sqrt{\frac{S}{N}}\sin\left(\frac{\pi}{\sqrt{2M_1}}\right)\right\}\right] \tag{5}$$

$$P_{M_2-DASK} = Q\left(\frac{\alpha-1}{\sqrt{1+\alpha^2}}\sqrt{\frac{E_b}{N_0[1+(1+\alpha^2)^2/4]}}\right) \tag{6}$$

The energy required to successfully transmit a bit is evaluated by inverting Equation (4). The optimization criteria for minimum energy consumption can be designed as in Equation (7)

$$\underset{\{\alpha\}}{\text{minimize}}\{E_b(P_{M-DAPSK})\} \tag{7}$$

Energy consumption analysis for differential modulation diversity
In this section, we analyze the required energy to successfully send a bit. Minimizing the transmission energy consumption is an important issue of wireless nodes especially in wireless sensor network. This is useful in extending the life time of a WSN. Overall energy required to successfully transmit a bit depends on the power consumed by the power amplifiers according to link budget analysis and the total circuit power consumption P_c as in [11]. The system parameters used to evaluate the energy consumption per bit is similar to analysis done in [11].

$$P_{out} = E_b R_b \frac{4\Pi d^2}{G_t G_r \lambda^2} M_l N_f \tag{8}$$

To achieve fixed end to end BER, the required energy to successfully receive a bit at the receiver is E_b, R_b is the bit rate, and'd' is the transmission distance.

$$P_a = (1+\alpha)P_{out} \tag{9}$$

$$P_c = M_t(P_{DAC} + P_{filt} + P_{mix}) + 2\,P_{sync} + M_r(P_{LNA} + P_{IFA} + P_{ADC} + P_{filt} + P_{mix}) \tag{10}$$

The parameters in Equation (8) to (11) are explained in detail in [11]. The total energy consumption per bit E_{bt} for a fixed-rate system is expressed as in

$$E_{bt} = \frac{P_a + P_c}{R_b} \tag{11}$$

3. Simulated results

MATLAB software is used to derive energy consumption per bit is found for DAPSK modulation for different values of ring ratios. There are 2 rings in the 16-DAPSK constellation with eight PSK points in each ring. The BER values are minimum for a ring ratio of 1.8. Hence DAPSK constellation with 1.8 ring ration consumes minimum energy compared to constellation with ring ratio of 2 and 2.2. The DAPSK constellation consumes less energy compared to 16-DPSK.

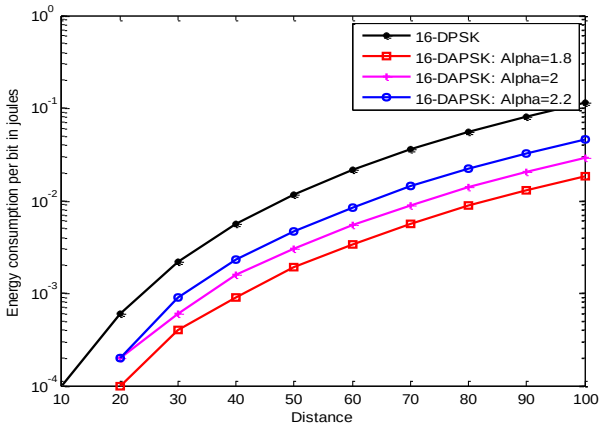

Fig. 2: Energy Consumption per Bit Comparison 16-DAPSK and 16-DPSK.

BER values as a function of E_b/N_0 for coherent QPSK with gray coding and non-coherent 16-ary DAPSK and 16-ary DPSK. For the non-coherent DAPSK system the amplitude ring ratio α is taken as 2 and the phase changes are taken as 8-ary PSK. Figure 3 depicts the BER performance of modulation diversity scheme for a QPSK constellation in a Rayleigh fading channel. According to the graph the modulation diversity scheme with rotation angle θ=26° outperforms the SSD scheme for QPSK with rotation angle 17°, 22 ° and 35 °. At 10-3 BER there is approximately 2 dB gain in E_b/N_0 for SSD scheme with rotation angle 26° compared to rotation angle 17°.

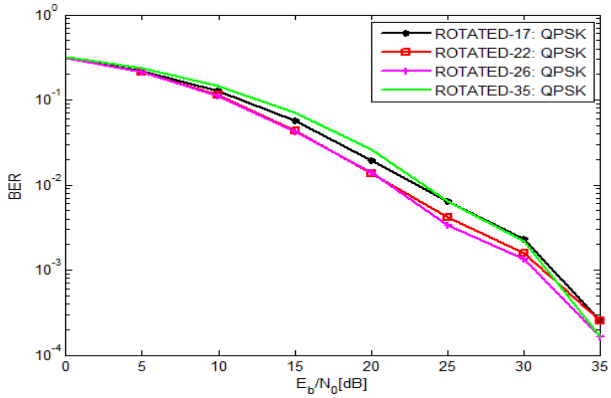

Fig. 3: BER Comparison of Coherent QPSK Signal Space Diversity System for Different Rotation Angle.

In the simulation of energy analysis one source and one destination is assumed. The overall energy consumption per bit for varying distance between source and destination is calculated for coherent QPSK SSD scheme, DPSK with modulation diversity and DAPSK

with modulation diversity. Figure 4 shows that the energy consumed per bit for QPSK for rotation angle 26º is less compared to angle 17º. The energy consumption per bit for non-coherent scheme with modulation diversity is illustrated in Figure 5. The simulation result shows that the DAPSK system requires less energy to successfully transmit a bit compared to DPSK system.

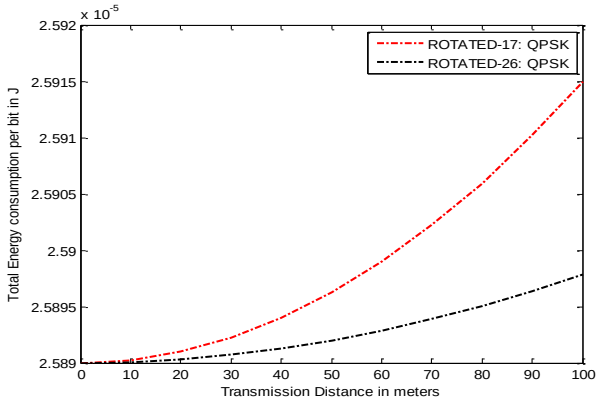

Fig. 4: Overall Energy Consumption per Bit of QPSK SSD System over Distance for Different Rotation Angles.

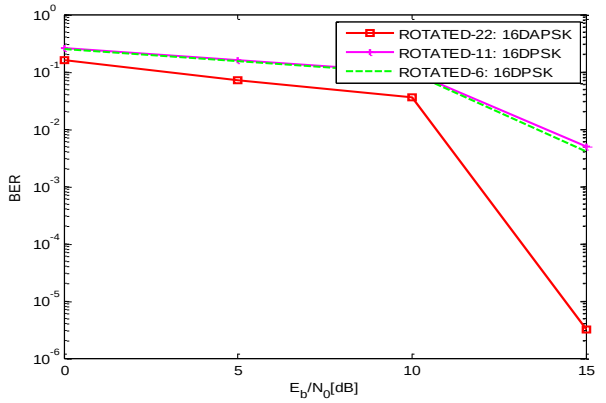

Fig. 5: Modulation Diversity BER Plots for DPSK and DAPSK Technique.

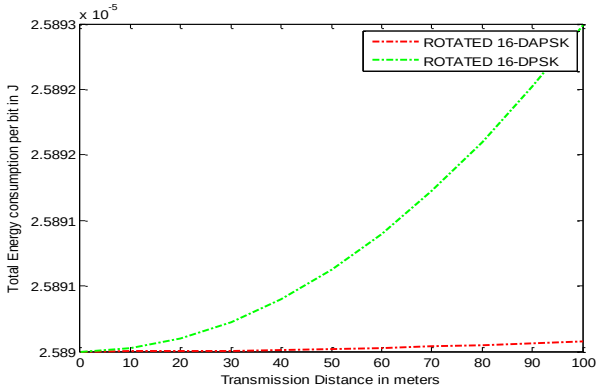

Fig. 6: Overall Energy Consumption per Bit over Distance for DAPSK and DPSK System.

4. Conclusion

Simulation results show that BER values of the proposed DAPSK with modulation diversity is advantageous compared to DPSK with modulation diversity. This non-coherent detection is a better choice particularly in practical systems where channel estimation and equalization is difficult to achieve. The energy efficiency of this spectrally efficient DAPSK modulation system proves to be better than DPSK modulation system. This technique avoids pilot symbol transmission for CSI recovery. This work can be extended to fast fading channel and multiple symbol differential detectors can be employed to get improved performance.

References

[1] Webb WT, Hanzo L & Steele R, "Bandwidth efficient QAM schemes for Rayleigh fading channels", IEEE Proc.I, Vol.138, No.3, (1991), pp.169–175. https://doi.org/10.1049/ip-i-2.1991.0023.

[2] Boutros J & Viterbo E, "Signal space diversity: A power- and bandwidth-efficient diversity technique for the Rayeigh fading channel", IEEE Trans. Inform. Theory, Vol.44, (1998), pp.1453–1467. https://doi.org/10.1109/18.681321.

[3] Schober R & Lampe L, "Noncoherent receivers for differential space–time modulation", IEEE Trans. Commun., Vol.50, (2002), pp.768–777. https://doi.org/10.1109/TCOMM.2002.1006558.

[4] Dallal YE & Shamai S, "Time diversity in DPSK noisy phase channels", IEEE Trans. Commun., Vol.40, (1992), pp.1703–1715. https://doi.org/10.1109/26.179934.

[5] Hochwald BM & Sweldens W, "Differential unitary space–time modulation", IEEE Trans.Commun., Vol.48, (2000), pp.2041–2052. https://doi.org/10.1109/26.891215.

[6] Engels V & Rohling H, "Multilevel differential modulation technique (64-DAPSK) for multicarrier transmission systems", Eur. Trans. Telecommun., Vol.6, No.6, (1995), pp.633–640. https://doi.org/10.1002/ett.4460060605.

[7] Benedetto S, Biglieri E & Daffara R, "Modeling and performance evaluation of nonlinear satellite links-a Volterra series approach", IEEE Transactions on Aerospace and Electronic Systems, (1979), pp.494-507. https://doi.org/10.1109/TAES.1979.308734.

[8] Pupolin S & Greenstein L, "Performance analysis of digital radio links with nonlinear transmit amplifiers", IEEE Journal on selected areas in communications, Vol.5, No.3, (1987), pp.534-546. https://doi.org/10.1109/JSAC.1987.1146546.

[9] Ishibashi K, Ochiai H & Kohno R, "Low complexity bit-interleaved coded DAPSK for Rayleigh fading channels", IEEE J. Sel. Areas Commun., Vol.23, No.9, (2005), pp.1728–1738. https://doi.org/10.1109/JSAC.2005.853879.

[10] Liang XB & Xia XG, "Unitary signal constellations for differential space-time modulation with two transmit antennas: parametric codes, optimal designs, and bounds", IEEE Transactions on Information Theory, Vol.48, No.8, (2002), pp.2291-2322. https://doi.org/10.1109/TIT.2002.800498.

[11] Cui S, Goldsmith AJ & Bahai A, "Energy-efficiency of MIMO and cooperative MIMO techniques in sensor networks", IEEE J. Sel. Areas Commun., Vol.22, No.6, (2004), pp.1089-1098. https://doi.org/10.1109/JSAC.2004.830916.

[12] Taricco G & Viterbo E, "Performance of component interleaved signal sets for fading channels", IEEE Electronics Letters, Vol.32, No.13, (1996), pp.1170–1172. https://doi.org/10.1049/el:19960816.

[13] De Oliveira Brante GG, Kakitani MT & Souza RD, "Energy efficiency analysis of some cooperative and non-cooperative transmission schemes in wireless sensor networks", IEEE Transactions on Communications, Vol.59, No.10, (2011), pp.2671-2677. https://doi.org/10.1109/TCOMM.2011.063011.100744.

[14] Maham B, Hjorungnes A & Narasimhan R, "Energy-efficient space-time coded cooperation in outage-restricted multihop wireless networks", IEEE Transactions on Communications, Vol. 59, No.11, (2011), pp.3111-3121. https://doi.org/10.1109/TCOMM.2011.082911.100280A.

[15] Jie D, Liu DP & Wu HR, "Energy efficiency of virtual MIMO transmission schemes for cluster-based wireless sensor networks", The Journal of china universities of posts and telecommunications, Vol.18, No.4, (2011), pp.31-38. https://doi.org/10.1016/S1005-8885(10)60080-5.

[16] Sheikhpour R & Jabbehdari S, "An energy efficient chain-based routing protocol for wireless sensor networks", KSII Transactions on Internet and Information Systems, Vol.7, No.6, (2013), pp.1357-1378. https://doi.org/10.3837/tiis.2013.06.001.