International Journal of Engineering & Technology, 7 (1.2) (2018) 101-109

International Journal of Engineering & Technology

Website: www.sciencepubco.com/index.php/IJET

Research paper

DVR based reactive power control strategy of DFIG for wind energy generation during unbalanced grid voltages

S. Geethanjali [1] *, S. Shanmugapriya [2]

[1] *Asst. Professor, Dept. of Electrical and Electronics Engineering, SRM University, Kattankulathur, Tamil Nadu*
[2] *Asst. Professor, Dept. of Electrical and Electronics Engineering, SRM University, Kattankulathur, Tamil Nadu*
**Corresponding author E-mail: mailpriya10@gmail.com*

Abstract

This document offers a whole new one on direct power control (DPC) technique for a doubly fed induction generator (DFIG)-based the wind vitality era program. This tactic relies on the one on one supervision regarding system productive and reactive strength by simply deciding on applicable voltage vectors on the rotor feature. This strategy works by using the mechanical system flux that take away the complications linked to rotor flux. This guidelines with this strategy rectangular calculate delineated intimately with this document. The one unit parameter needed by the projected DPC technique is usually which the mechanical system resistance as their effect on the system effectiveness is located to get minimal. Simulation final results on the 1.5 MW DFIG program exhibits the effectiveness and robustness in the projected supervision tactic in the course of versions regarding unit details. DVR is usually given to management the facility excellent issues and thereby management the active and reactive power.

Keywords: *Direct Power Control (DPC); Doubly Fed Induction Generator (DFIG); Direct Torque Control; Voltage Source Converter; Voltage Vector; Dynamic Voltage Restorer (DVR).*

1. Introduction

Electrical energy is that the most popular explanation for power for the residences, perform sites and conjointly industrial sectors. Human population and conjointly industrial progress get terminated in major boosts at intervals power body process throughout the last many years. This essential issue provides determined international locations round the world take into thought different varieties of power.

Due to deployment of non-conventional energy sources, more importance given on the renewable sources of energy especially wind. As the power requirement increases on a daily load basisseveral wind turbines have been installed and the power ratings of the wind turbines are increasing. But the major problem is the stability issues of the wind farms when integrated to the power grid. However, in most cases we choose symmetrical voltages, but in reality asymmetrical cases are much more frequent thereby, causing unbalanced voltages in transmission system. The stator current of DFIG is highly sensitive to the slightest unbalancing nature of the grid voltage. This unbalancing in both voltage and current can cause many problems in the system such as mechanical stress due to output power pulsation, failure of component, overheating.

In this paper, wind turbine, drive train, DFIG and converter model connected to a grid. Under anunbalanced conditions, the system is analyzed and the corresponding active and reactive power is controlled using DVR. The presented method for wind energy system transient analysis is implemented in MATLAB/SIMULINK.

2. Wind energy generation system

Wind turbines use a doubly-fed induction creator (DFIG) composing of wound rotor induction creator and also a great AC/DC/AC IGBT-based PWM converter. The particular stator turning is connected on to the 50 Hz grid while rotor is raised on from varying regularity from the AC/DC/AC converter. The particular DFIG technology enables getting rid of maximum power from the wind regarding reduced wind rates by optimizing the wind turbine pace, although minimizing hardware worries about the wind turbine in the course of gusts involving wind.

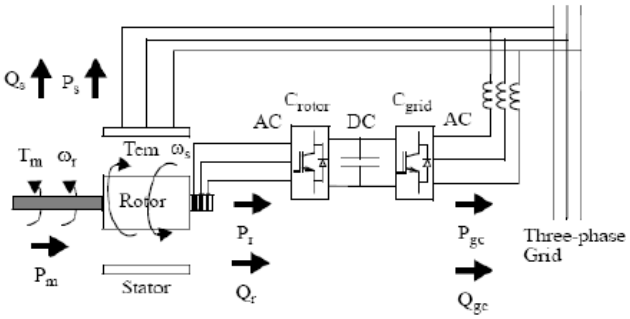

Fig. 1: Power Flow Diagram of DFIG.

The mechanical power and the stator electric power output are computed as follows [1]:

$$P_r = T_m * \omega_r \quad (1)$$

$$P_s = T_{em} * \omega_s \quad (2)$$

Copyright © 2018 S.Geethanjali, S.Shanmugapriya. This is an open access article distributed under the Creative Commons Attribution License, which permits unrestricted use, distribution, and reproduction in any medium, provided the original work is properly cited.

For a loss less generator the mechanical equation is:

$$J\frac{d\omega_r}{dt} = T_m - T_{em} \quad (3)$$

In steady-state at fixed speed for a loss less generator:

$$T_m = T_{em} \text{ and } P_m = P_r + P_s \quad (4)$$

And it follows that:

$$P_r = P_m - P_s = T_m\omega_r - T_{em}\omega_s = -sP_s \quad (5)$$

Where,
$s = (\omega_s - \omega_r)/\omega_s$ is defined as the slip of the generator

2.1. Dynamic simulation of DFIG in terms of DQ – winding

The general model for wound rotor induction machine is similar to any fixed-speed induction generator as follows:

1) Voltage equations:

Stator Voltage Equations:

$$Vqs = p\lambda qs + \omega\lambda qs + rslqs \quad (6)$$

$$Vds = p\lambda ds - \omega\lambda qs + rslds \quad (7)$$

Rotor Voltage Equations:

$$Vqr = p\lambda qr + (\omega - \omega r)\lambda dr + rriqr \quad (8)$$

$$Vdr = p\lambda dr - (\omega - \omega r)\lambda qr + rridr \quad (9)$$

2) Power Equations:

$$Ps = 3/2\ (Vds\ ids + Vqsiqs) \quad (10)$$

$$Qs = 3/2\ (Vqs\ ids - Vds\ ids) \quad (11)$$

3) Torque Equation:

$$Ts = -\ 3p/4\ (\lambda dsiqs - \lambda qs\ ids) \quad (12)$$

4) Flux Linkage Equations:

Stator Flux Equations:

$$\lambda qs = (\ Lls + Lm\ )\ iqs + Lm\ iqr \quad (13)$$

$$\lambda ds = (\ Lls + Lm\ )\ ids + Lm\ idr \quad (14)$$

Rotor Flux Equations:

$$\lambda qr = (\ Llr + Lm\ )\ iqr + Lm\ iqs \quad (15)$$

$$\lambda dr = (\ Llr + Lm\ )\ idr + Lm\ ids \quad (16)$$

3. Control design in stator-voltage and stator-flux oriented frames

The mechanical power extracted by a wind turbine from the wind is expressed by the cube law [2].

$$P_w = \tfrac{1}{2}\rho_{air}A_{blade}C_p\,(\beta.\lambda)\ v_w^3 \quad (17)$$

$$\lambda = R_{blade}\omega_m / v_w \quad (18)$$

Where,

ρ_{air} = air density [kg/m^3],
A_{blade} = area covered by rotor blades [m^2],
C_p = turbine performance coefficient,
v_w = wind speed [m/s],
R_{blade} = radius of the rotor blades [m],
ω_m = angular speed of the blades

a) Generator control of DFIG wind turbine

Speed control of a DFIG is normally transformed into power control. The controller of the rotor-side converter is a two-stage controller which is comprised of a real and reactive power controller [3]. Stator-flux oriented frame has been commonly utilized frame for the design and analysis of DFIG. In this frame the q-axis and d-axis components of the rotor currents are used for active and reactive power control respectively.

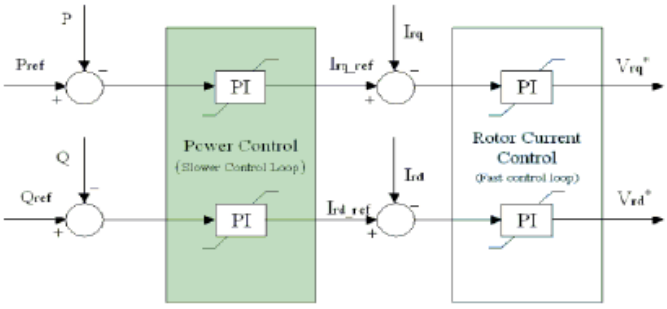

Fig. 2: DFIG Rotor Side Controller.

b) DFIG transient and steady-state model in d-q reference frame

Park's model is the most commonly used model for the DFIG. Using standard motor principles, the mathematical representation of stator voltage, rotor voltage and the flux equations as per space vector theory [4].

$$V_{sd} = R_s i_{sd} + \frac{d}{dt}\lambda_{sq} - \omega_s\lambda_{sq} \quad (19)$$

$$V_{sq} = R_s i_{sq} + \frac{d}{dt}\lambda_{sd} + \omega_s\lambda_{sd} \quad (20)$$

$$V_{rd} = R_s i_{rd} + \frac{d}{dt}\lambda_{rd} - \omega_r\lambda_{rq} \quad (21)$$

$$V_{rq} = R_r i_{rq} + \frac{d}{dt}\lambda_{rq} + \omega_r\lambda_{rd} \quad (22)$$

$$\lambda_{sd} = (L_{ls} + L_m)i_{sd} + L_m i_{rd}\ ,$$

$$\lambda_{sq} = (L_{ls} + L_m)i_{sq} + L_m i_{rq} \quad (23)$$

$$\lambda_{rd} = (L_{ls} + L_m)i_{sd} + L_m i_{sd}\ ,$$

$$\lambda_{rq} = (L_{lr} + L_m)i_{rq} + L_m i_{sq} \quad (24)$$

Where,
R_s, R_r, L_{lr} = resistances and leakage inductances of the DFIG stator and rotor windings.
L_m = mutual inductance,
V_{sd}, V_{sq}, V_{rd}, V_{rq}, i_{sd}, i_{sq}, i_{rd}, λ_{sd}, λ_{sq}, λ_{rd}, λ_{rq} = d and q components of the space vectors of stator and rotor voltages, currents and fluxes
$\omega_s$andω_r are the angular frequencies of stator and rotor currents.

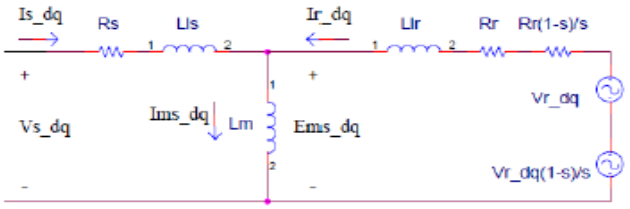

Fig. 3: DFIG Steady-State Equivalent Circuit in D-Q Frame.

Since the angle difference is same whether we consider the stator winding resistance and leakage inductance or we don't consider

them, it has negligible effect on the magnetization current I_{ms_dq} and stator-flux space vector λ_{s_dq}.

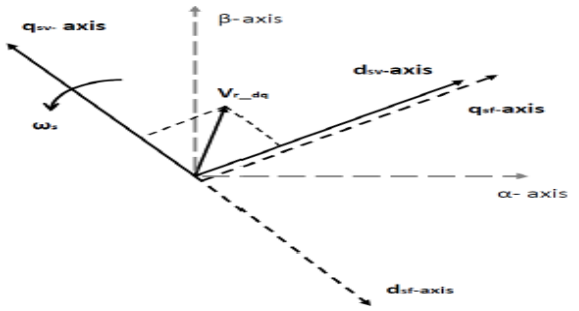

Fig. 4: Relationship between Stator-Voltage and Stator-Flux Oriented Frames (Neglecting Stator Winding Resistance and Leakage Inductance).

c) Pitch Angle Controller

The pitch angle controller model as shown in Fig 5 is useful when wind speed is high and the generator speed can no longer be controlled by increasing the generated power because of capacity constraints of generator and converters/inverters. Therefore the blade pitch angle is adjusted to limit the aerodynamic efficiency of the rotor. This prevents the rotor speed becoming too high. The pitch angle should be varied to balance the electrical and mechanical power [6].

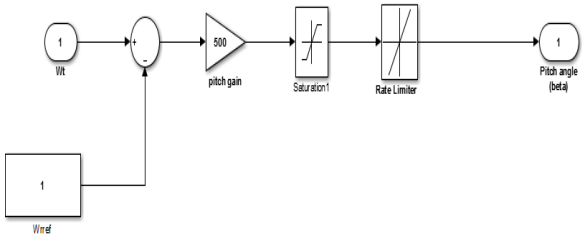

Fig. 5: Pitch Angle Controller Model.

Doubly-Fed Induction Generator (DFIG) is connected to the grid via its two converters which is the Rotor Side Converter (RSC) and Grid Side Converter (GSC). Stator of the DFIG is connected to the grid directly while the rotor is connected via the converters to the grid. Proportional Controlled (PI) based Pulse Width Modulation (PWM) generator is used for generating and supplying the pulse into the convertors. Choke is there for limiting the high starting current from the generator.

d) Drive Train Model

The wind turbine power can be controlled via the power coefficient. Practically, it is controlled by adjusting the pitch angle to maintain the power from wind turbine C_p function has the highest value of $C_{Pmax} = 0.48$ where the pitch angle $\beta = 0$. In order to capture the maximum power from wind, β should be equal to zero.

The drive train system consists of shaft, gearbox etc. The two-mass model of the drive train system is given by [5]

$$T_t - T_{sh} = 2*H_t* \frac{d\omega t}{dt} \quad (25)$$

$$\frac{\omega_t - \omega_r}{W_{ebase}} = \frac{d\theta sta}{dt} \quad (26)$$

$$T_{sh} = [\theta_{sta} *K_{ss} + K_d *(W_t - W_r)] \quad (27)$$

$$T_{base} = \frac{Pnom}{W_{ebase}} \quad (28)$$

$$T_m = T_{base}* T_{sh} \quad (29)$$

Where,

T_t and T_{sh} = output torque and shaft torque of the turbine

H_t = turbine inertia constant.

θ_{sta}= shaft twist angle

K_{ss}, ω_t = shaft stiffness coefficient and angular speed of the wind turbine

P_{nom}= rated mechanical power of wind energy system

W_{ebase}= electrical base speed

T_{base}= base torque of wind turbine

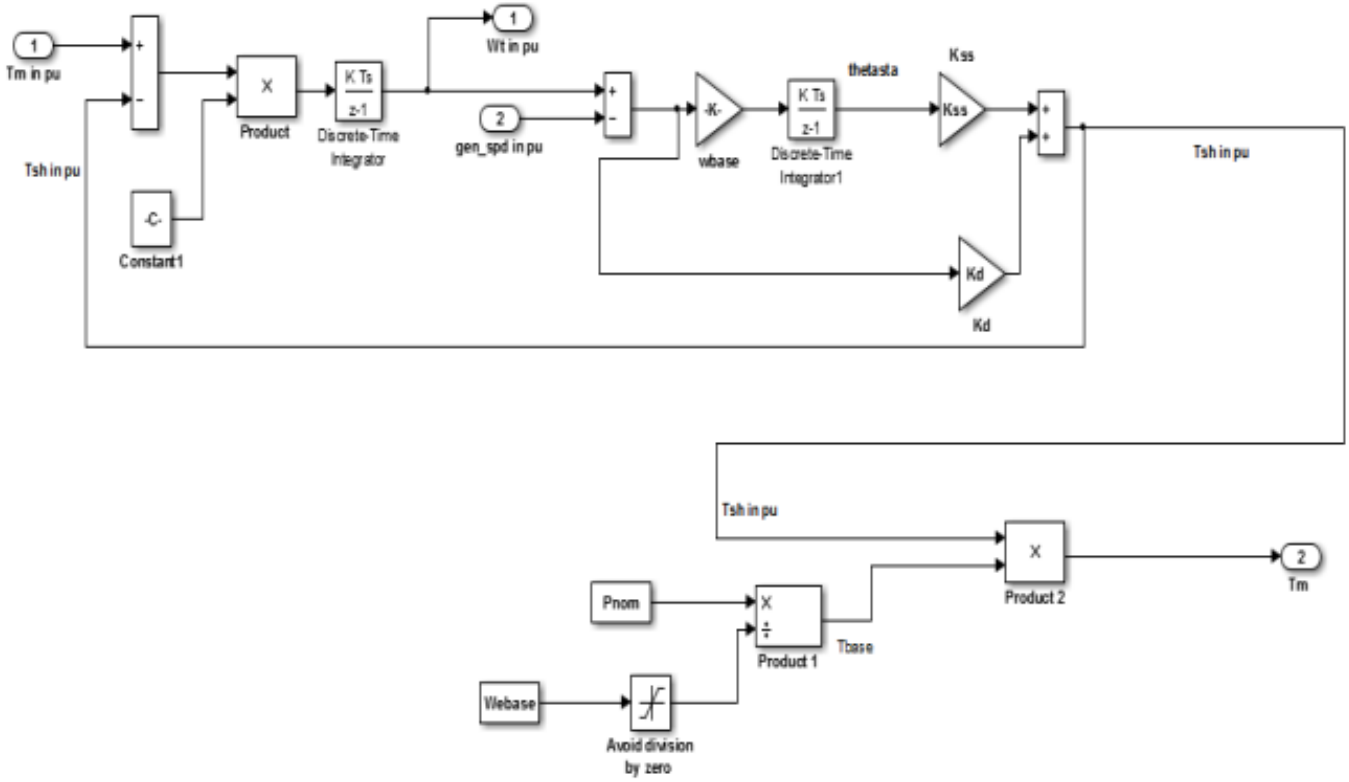

Fig. 6: Drive Train Model.

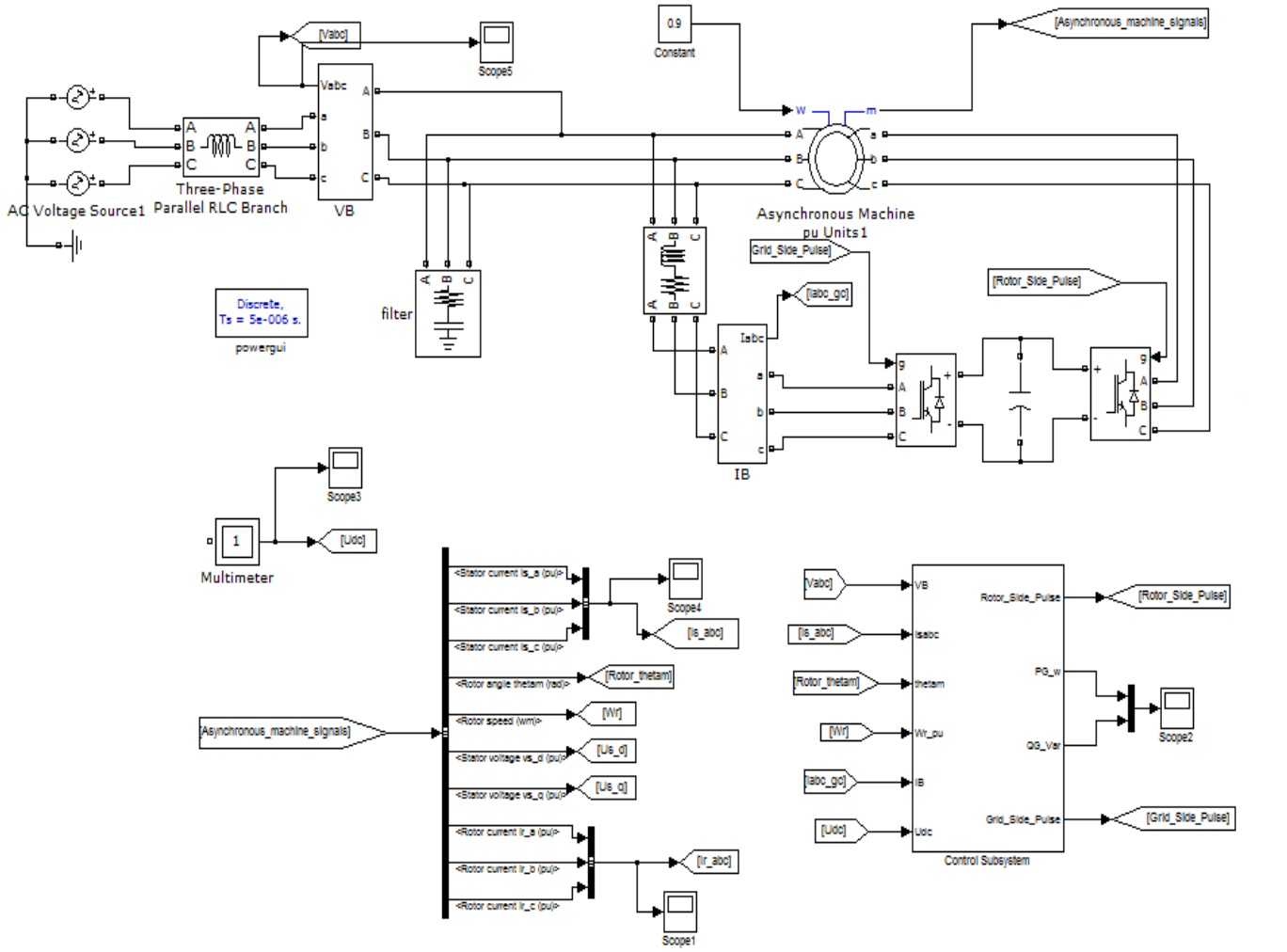

Fig. 7: DFIG with Its Converters.

4. Synchronization control to connect DFIG to the grid

The stator-flux orientation frame has been implemented later using two different techniques based on the estimation of stator-flux space vector angle. The simulation results present the effectiveness of synchronization under different conditions and different reference frames. The main aim of successful synchronization is to reduce stresses on the electrical and mechanical components of the wind turbine. Also it helps in preventing power system disturbance due to stator-grid connection. The mechanical stress is caused by heavy transient torque at the start-up and electrical stress is due to huge heavy start-up currents which are transient in nature and take some to achieve steady state conditions.

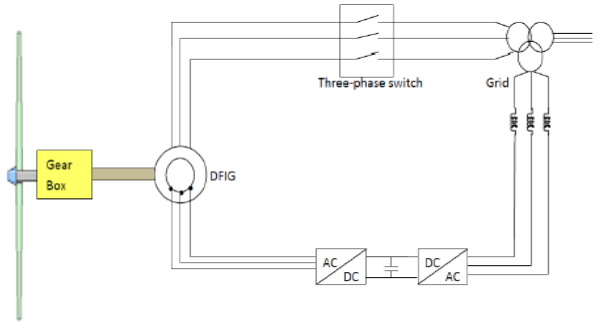

Fig. 8: DFIG-Grid Synchronization System.

The control technique, a phase-locked-loop (PLL) computes the grid voltage phase displacement required for the system control orientation and synchronization procedures. The PI controller gives an angular frequency which is integrated to obtain the grid voltage space vector angle [6] and [7].

The single line diagram of test system used in this study is illustrated in Figure 3. The grid model consist of a 33 kV, 60 Hz, grid supply point, feeding a 25 kV distribution system through 33/25 kV, 1000 MVA step down transformer, which is fed a 460V system through 25kV/460V, 1000 MVA step down transformer.The line of 33 kV, 30KM nominal-Π line. The DFIG based wind turbine is of 1.5 MW

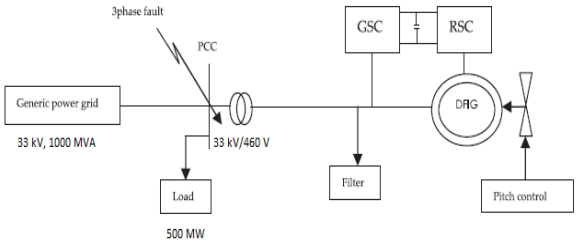

Fig. 9: Single Line Diagram for the System.

The DFIG is thus connected to the power grid via the Point of Common Coupling (PCC) and a three phase or symmetrical fault is created in the load side. The Simulink model is shown in Fig. 9.

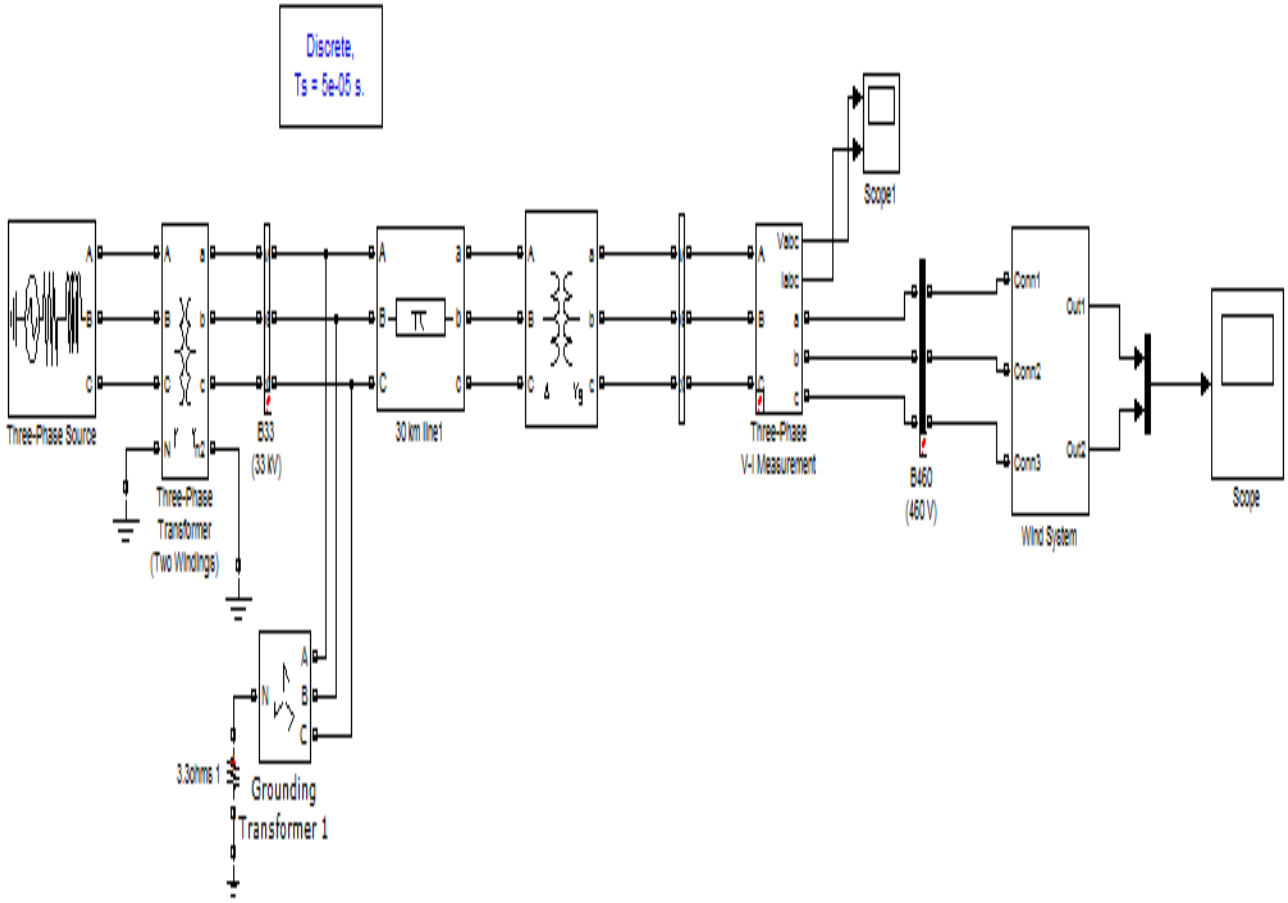

Fig 10: DFIG Connected to Grid.

5. Dynamic voltage restorer

Dynamic Voltage Restoration (DVR) is a method and apparatus used to sustain, or restore, an operational electric load during sags, or spikes, in voltage supply. Often used in manufacturing areas requiring significant power to run tools/equipment, and utility plants, this custom device mitigates potential damage to equipment and undesirable slowdowns to the production line caused by an abrupt change in electric load. This method uses critical devices such as an automatic Transfer switch and IGBT Modules in order to operate.DVR (Dynamic Voltage Restorer) is a static var device that has seen applications in a variety of transmission and distribution systems. It is a series compensation device, which protects sensitive electric load from power quality problems such as voltage sags, swells, unbalance and distortion through power electronic controllers that use voltage source converters (VSC)[8].

In normal conditions, the dynamic voltage restorer operates in stand-by mode. However, during disturbances, nominal system voltage will be compared to the voltage variation. This is to get the differential voltage that should be injected by the DVR in order to maintain supply voltage to the load within limits.The amplitude and phase angle of the injected voltages are variable, thereby allowing control of the real and reactive power exchange between the dynamic voltage restorer and the distribution system.

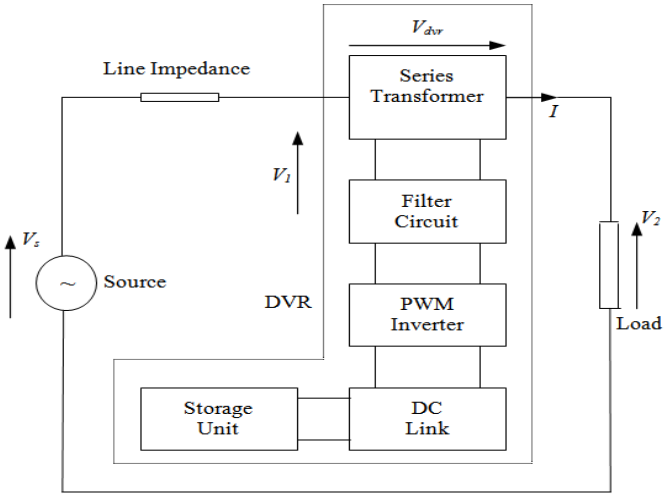

Fig. 11: Schematic Diagram of a Dynamic Voltage Restorer.

The DC input terminal of a DVR is connected to an energy storage device of appropriate capacity. As mentioned, the reactive power exchange between the DVR and the distribution system is internally generated by the DVR without AC passive reactive components. The real power exchanged at the DVR output AC terminals is provided by the DVR input DC terminal by an external energy source or energy storage system.

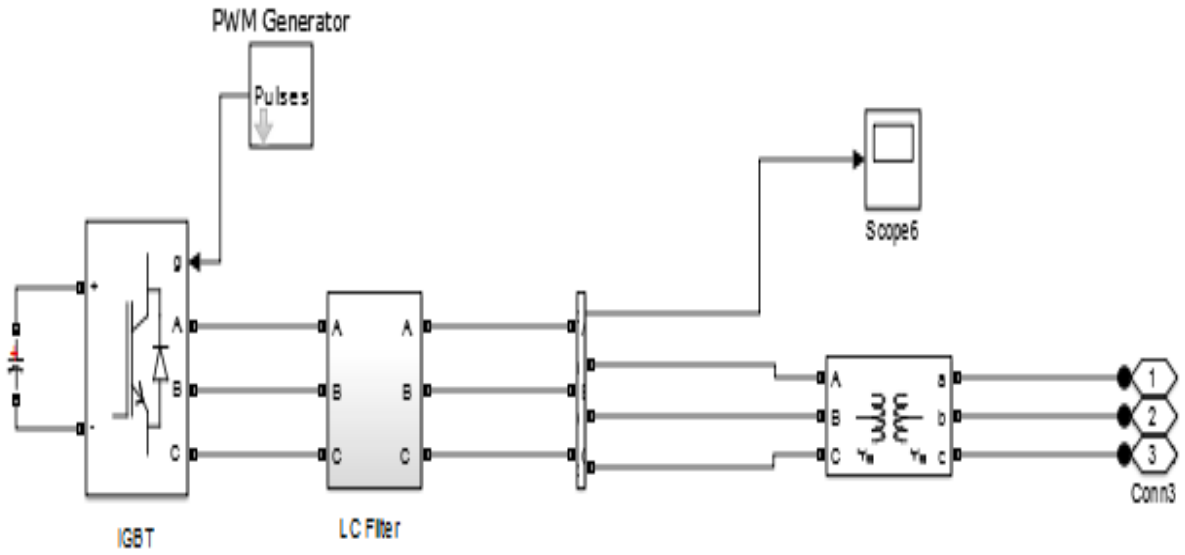

Fig.12a: DVR Simulink Block.

6. Simulations and results

The DFIG based system is connected to the grid with a 3-phase fault on the system is as shown below.

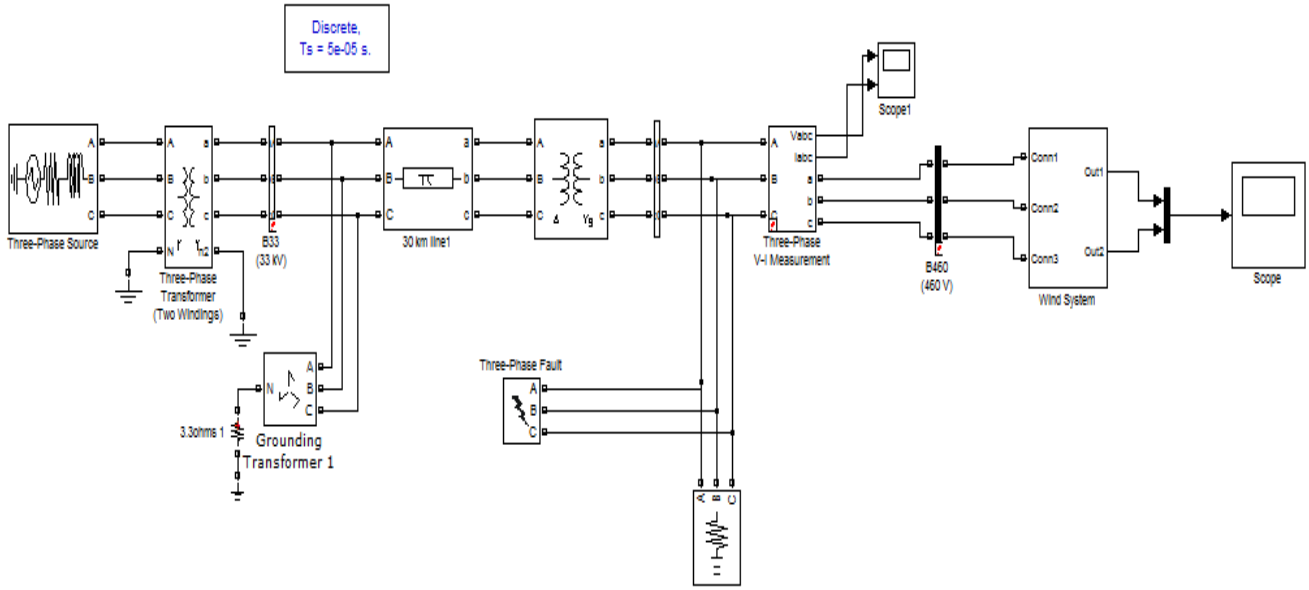

Fig. 12b: DFIG Connected to Grid with Fault.

Stator voltage and current, Rotor voltage and current

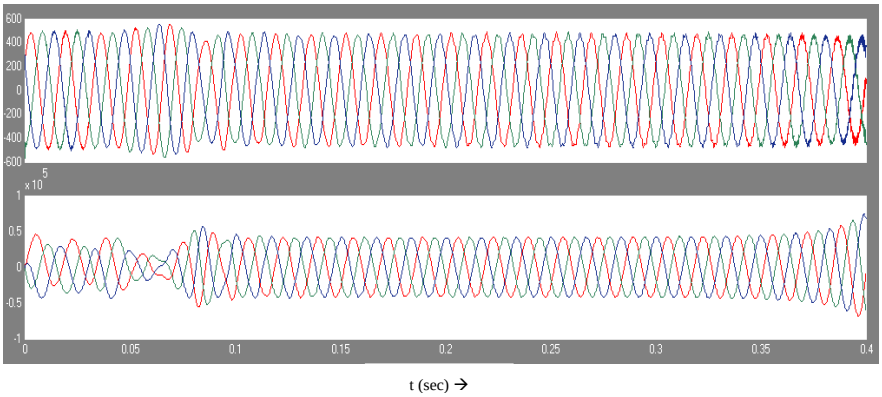

Fig. 13: Stator Voltage And Current (V) Waveform.

Under normal operating condition, the active and reactive power respectively.

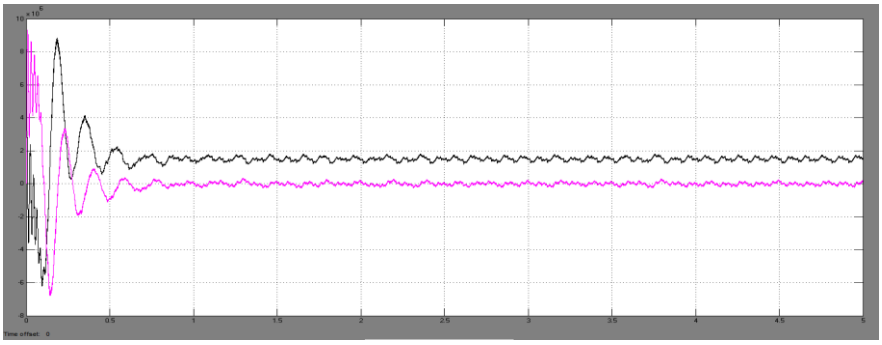

t (sec) →

Fig. 14: Active (W) and Reactive Power (VAR) with Controller and Without Fault.

During Fault condition

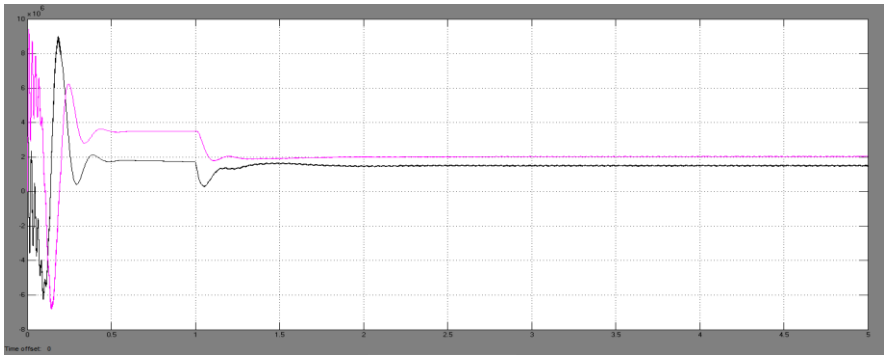

t (sec) →

Fig. 15: Active (W) and Reactive Power (VAR) with Controller and with Fault.

As refer form Fig.15, The amount of reactive power during unbalanced/fault condition time is more than the active power.

So with the use of DVR the power is compensated and with time its achieving steady state condition i.e it's becoming constant about the origin axis.

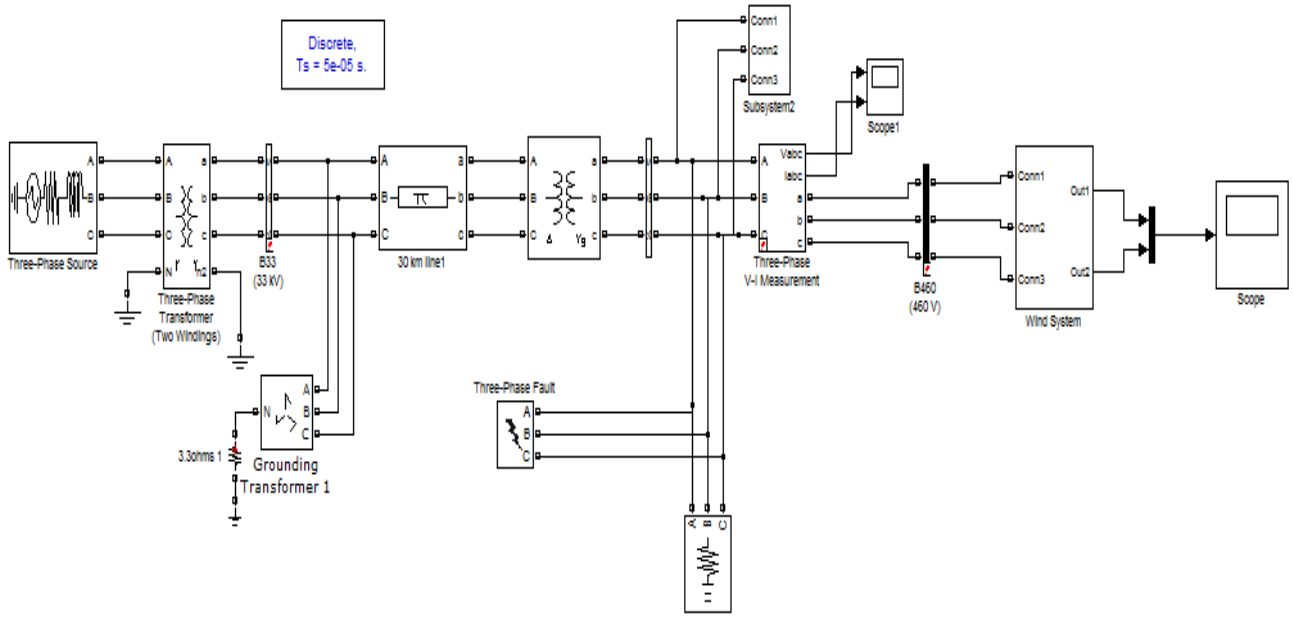

Fig. 16: DFIG Connected to Power Grid with DVR.

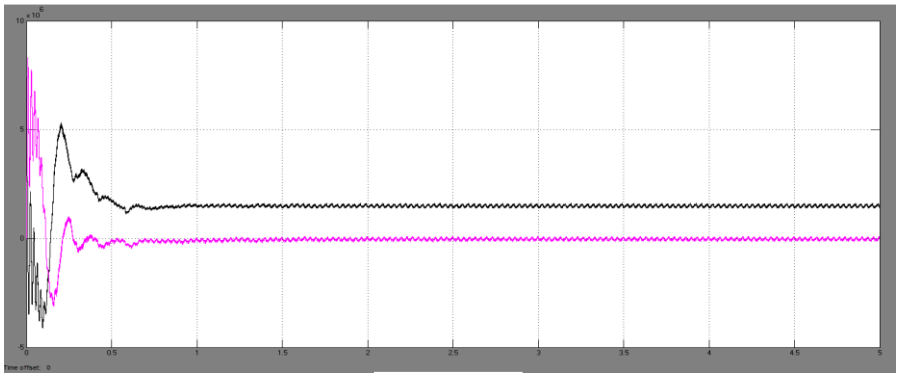

Fig. 17: Active (W) and Reactive Power (VAR) with Controller and without Fault.

During Fault condition

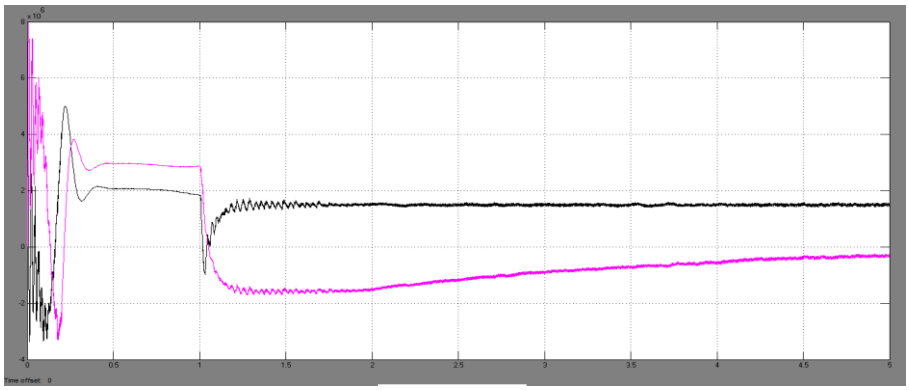

Fig. 18: Active (W) and Reactive Power (VAR) with Controller and with Fault.

Considering both the cases before fault i.e without and with DVR the amount of active power required remains constant, almost symmetrical, which also remain same in case of reactive power. Which implies that the system is under normal condition.
Now, considering the case during and after fault, the amount of reactive power required increases and after the fault is cleared its still more than the active power. With the use of DVR, the reactive power compensation is achieved and the system will attain a steady state condition.

7. Conclusion

Doubly fed induction generator is modeled in vectorized form in the synchronous frame associated with the stator voltage space vector, and also active power and reactive power is controlled by using PI controllers by injecting the rotor voltage (slip frequency).). Even though there is a change in reactive power set value the active power is not changed i.e., independent control of active and reactive power takes place.
With the use of DVR the power quality problems and the reactive power compensation is achieved thus bringing the system into a steady state situation.
We have considered only the constant wind speed, whereas the variable wind speed can be studied under different unbalancing condition, loading condition and to overcome with different FACTS devices. Also, new advanced controller can be used in the modelling of converter unit of the wind turbine.

Appendix

- Lumped DFIG Parameters

Nominal power: 1.5 MVA
Nominal voltage (LL): 460 V
Nominal Frequency: 60 Hz
Pair of poles: 2
Stator resistance and inductance: 0.01965, 0.0397 pu
Rotor resistance and inductance: 0.01909 0.0397 pu
Dc link capacitance: 1000 mF

- Transformer

Nominal power: 1000 MVA
Nominal Frequency: 60 Hz
Ratio: 25000/460 V, Δ/Y

- GRID

Nominal power: 1000 MVA
Nominal voltage (LL): 25 kV
Nominal Frequency: 60 Hz
Source Impedance: 0.0001 Ω

References

[1] PavlosTourou, ConstantinosSourkounis,"DFIG-based Wind Energy Conversion Systems Under Unbalanced Voltage Dips", International Symposium on Power Electronics, Electrical Drives, Automation and Motion, 2014.
[2] Min MinKyaw, V.K. Ramachandaramurthy, "Fault ride through and voltage regulation for grid connected wind turbine," Renewable Energy, vol. 36, pp. 206-215, 2011. https://doi.org/10.1016/j.renene.2010.06.022.
[3] A.D. Hansen, P. Sorensen, F. Blaabjerg, "Overall control strategy of variable speed doubly-fed induction generator wind turbine", (in Grid Integration and electrical systems of wind turbines and wind farms [CD-ROM]), Nordic Wind Power Conference 2004 (NWPC 04), Göteborg (SE), 1-2 March 2004.
[4] N. Mohan, Advanced Electric Drives- Analysis, Modeling and Control using Simulink, Minneapolis, MN: Minnesota Power Electronics Research & Education, ISBN 0-9715292-0-5, 2001.
[5] H. Li, B. Zhao, C. Wang, H. W. Chen and Z. Chen, "Analysis and Estimation of Transient Stability for a Grid-Connected Wind

Turbine," Renewable Energy An International Journal., vol. 36, pp. 1469-1476, Aug. 2010. https://doi.org/10.1016/j.renene.2010.08.023.

[6] J.L. Da Silva, R.G. de Oliveira, S.R. Silva, B. Rabelo, W. Hofmann, "A Discussion about a Start-up Procedure of a Doubly-Fed Induction Generator System", NORPIE/2008, Nordic Workshop on Power and Industrial Electronics, 9-11 June 2008.

[7] Jung-Woo Park, Ki-Wook Lee, Dong-Wook Kim, Kwang-Soo Lee, Jin-Soon Park, "Control Method of a Doubly-Fed Induction Generator with a Grid Synchronization against Parameter Variation and Encoder Position", Industry Applications Conference, 2007, 42nd IAS Annual Meeting, Conference Record of 2007 IEEE, pp. 931-935, New Orleans, LA, 23-27 September 2007.

[8] M. Kavitha, T. Chandrasekhar, D. Mohan Reddy, "Designing of dynamic voltage restorer (DVR) to improve the power quality for restructured power systems," American Journal of Electrical Power and Energy Systems. Vol. 2, No. 3, 2013, pp. 94-97. https://doi.org/10.11648/j.epes.20130203.15.

[9] Siraj, K.; Siraj, H.; Nasir, M," Modeling and control of a doubly fed induction generator for grid integrated wind turbine." Power Electronics and Motion Control Conference and Exposition (PEMC), 2014 16th International, 2014, Page(s): 901- 906.