International Journal of Engineering & Technology, 4 (1) (2015) 104-112
www.sciencepubco.com/index.php/IJET
©Science Publishing Corporation
doi: 10.14419/ijet.v4i1.4161
Research Paper

Design and implementation of data collection module for WSN application

Valentina Markova *; Teodora Trifonova, Venceslav Draganov

Technical University of Varna, Department of Telecommunications, Varna, Bulgaria
**Corresponding author E-mail: via@tu-varna.bg*

Copyright © 2015 Valentina Markova et al. This is an open access article distributed under the Creative Commons Attribution License, which permits unrestricted use, distribution, and reproduction in any medium, provided the original work is properly cited.

Abstract

This paper presents the design and implementation of universal low cost data collection module (DCM), which is an essential part of remote monitoring system based on wireless sensor network. The proposed module expands the capabilities of a measuring node for collecting data from greater number of sensors. The DCM includes four parts: one group multiplexers for data acquisition, second group multiplexers for power management, voltage to current converters and DC/DC converters. The universal DC/DC converters provide autonomous power supply for the sensors and the multiplexers, which can be turned on or off for a certain period of time. The data collecting, monitoring and logging functions are realized through a LabVIEW project.The proper operation and the reliable performance of the system were proved by practical experiment. The proposed module makes the WSN-based system a versatile solution for a variety of monitoring applications.

Keywords: *Circuit Design; Data Collection; Sensor Systems; Wireless Sensor Network; Software Design.*

1. Introduction

Nowadays wireless sensor network (WSN) developments have great influence on human's life. Wireless sensor monitoring systems are widely used in fields like agriculture, industry, environmental and building monitoring [1]. WSN is a collection of sensor nodes connected by a wireless medium to perform distributed sensing and processing tasks [2].

There is a large spectrum of sensor node platforms available in the market, like National Instruments WSN platform, Crossbow Berkeley Motes, Lynx Technologies, and various Bluetooth kits, including the Casira devices from Cambridge Silicon Radio [3]. Some producers offer for their platforms integrated sensors for temperature, atmospheric pressure, humidity and ambient light intensity or others.

One of the interesting and perspective applications of WSN is the building monitoring. In this case sensor nodes can be placed in predefined positions in order to optimize the system efficiency [4]. The main benefit of using WSN for indoor building monitoring is the low installation and maintenance costs with good performance and flexibility.

Because of its universality we decided to use WSN platform developed by National Instruments (NI), which gave us the flexibility to connect a wide range of sensors for a variety of monitoring, testing, and measurement applications [5]. NI WSN measurement nodes are powered by a TI MSP430 microcontroller, which is optimized for low-power, multiyear deployment instead of processor speed, memory, and computing power.

LabVIEW – the graphical programming environment is an intuitive way for engineers and scientists to quickly develop applications for testing, data acquisition and control. With LabVIEW WSN, the behaviour of NI WSN measurement nodes can be customized to extend battery life, increase acquisition performance, and management of the interface with sensors.

During the working process on development of WSN-based system for remote monitoring of environmental parameters of home and workplace we were hampered by some constraints of the NI WSN node 3202 [6], [7]. It has only 4 analog inputs, which allow only 4 sensors to be attached at one and the same time. So, in cases in which more than 4 physical

phenomena had to be measured it should be used at least one additional node, or sensor board, integrating sensors for temperature, atmospheric pressure, humidity, light intensity or others. In the first case, the necessary number of sensor nodes has to be spread over a certain area (room) for monitoring a range of parameters. This is easy to implement and maintain approach but the trade- off is the higher price of the whole system. The second option is more difficult to realize because for any possible application it should be found particular sensor board, with a certain set of sensors and specified outputs and interfaces.

In this paper we present a different, low cost solution to the above mentioned problem, consisting of design and implementation of data collection module (DCM), which expands the capabilities of the NI sensor node. The combination of NI sensor node, gateway and proposed module make this system a versatile solution for monitoring applications.

2. Overall design of system

The proposed monitoring system based on WSN includes sensors, DCM, sensor node NI WSN 3202 and NI WSN gateway 9791, managed by lab VIEW**.** The system architecture is shown on Fig.1. The DCM is connected to sensor node through a twisted pair of wires. The collected data are further transmitted wirelessly to the gateway and then are transferred to the PC through Ethernet cable.

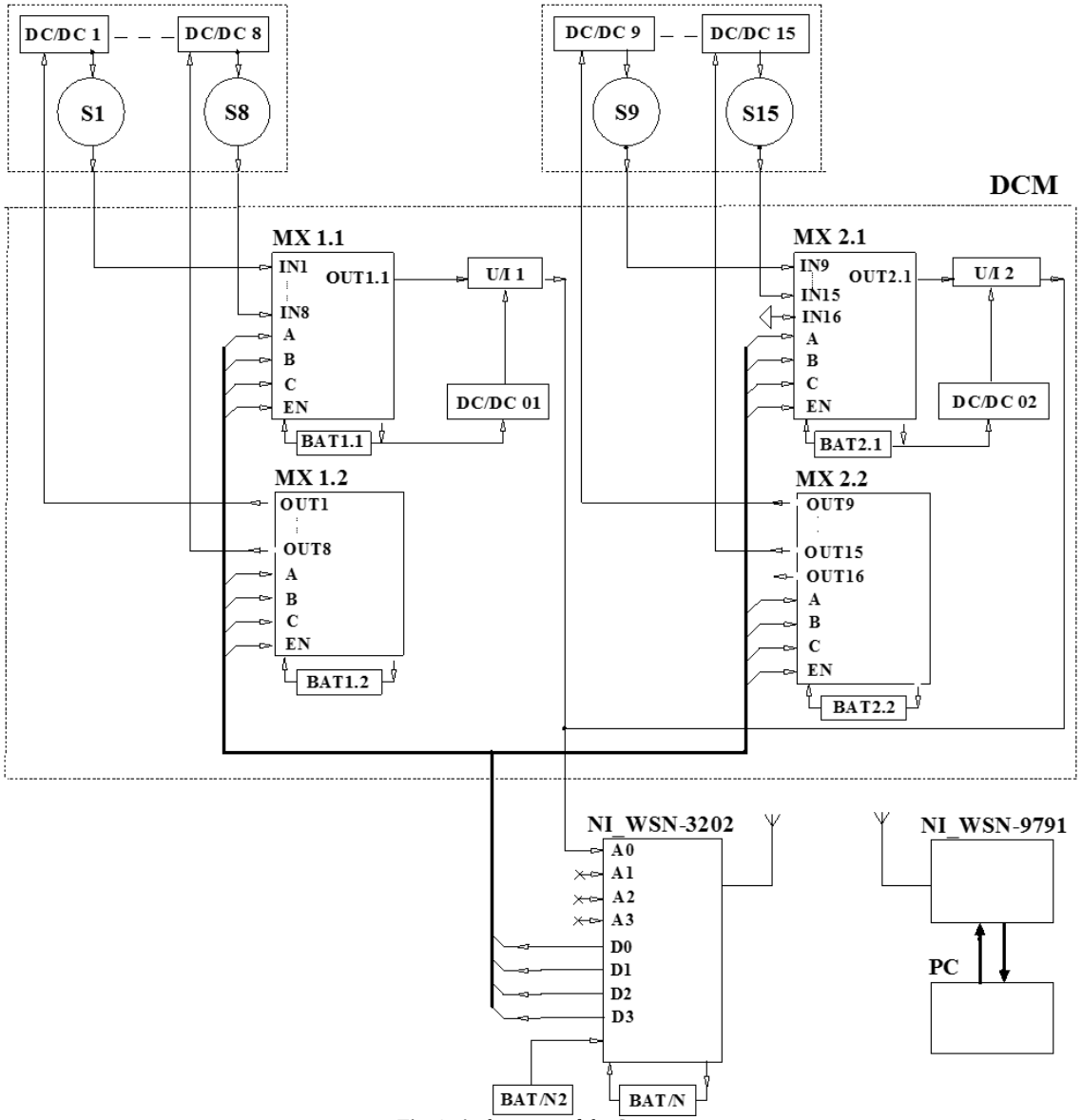

Fig. 1: Architecture of the Systems

In this project the real data are sensed by15 smart sensors S1 ÷ S15, which convert the data in DC voltage. The values of voltage vary between 0V and 2V depending on a parameter of the environment.

To be ensured one of the conditions for the sensors to be considered as smart, they are powered by an autonomous power supply units (DC/DC1 ÷DC/DC15), which is able to be turned on for a certain time. The proposed DCM has two 8-channels multiplexers MX1.1 and MX2.1, which are also charged by autonomous power supply units (BAT1.1, BAT2.1).
The connection between the DCM and input A0 of the node depends on the distance between them. When the distance is less than 6m, the multiplexer's outputs OUT1.1 and OUT1.2 (Fig.2) should be connected directly to the node via twisted pair. In the opposite cases, for distance above 6m the outputs of the multiplexers should be connected with the input of the node via U/I converter in order to be minimize possible disturbances in the cable and to be ensured higher stability of the input voltage of the node input.
The management of the multiplexers is ensured by the digital outputs of the node. The power supplies of the sensors turns on and off by second group multiplexers (MX1.2 and MX2.2), also managed by the digital outputs of the node.

3. Hardware design of data collection module

The DCM used in the proposed system includes four parts: one group multiplexers (MX1.1, MX2.1)– for data collection; second group multiplexers (MX1.2 and MX2.2) – for power supplies management; U/I converters; DC/DC converters.

3.1. Circuit diagram of first group multiplexers

Fig.2 displays the circuit diagram of the 8-channel analog multiplexer modules (MX1.1, MX2.1).
For greater universality, the DCM is designed, so that the connected sensors could be with current or voltage outputs. When the sensor has current output, it produces a voltage drop across the resistorR_1on the relevant input (for instance In1 on Fig.2). The voltage values vary between 0 and 2V. If the used sensor is with voltage output, the input resistor R_1 should be removed.The resistance values of both resistors R_9, R_{10}, which are equal, vary between 10 and 100kΩ with tolerance 1%.

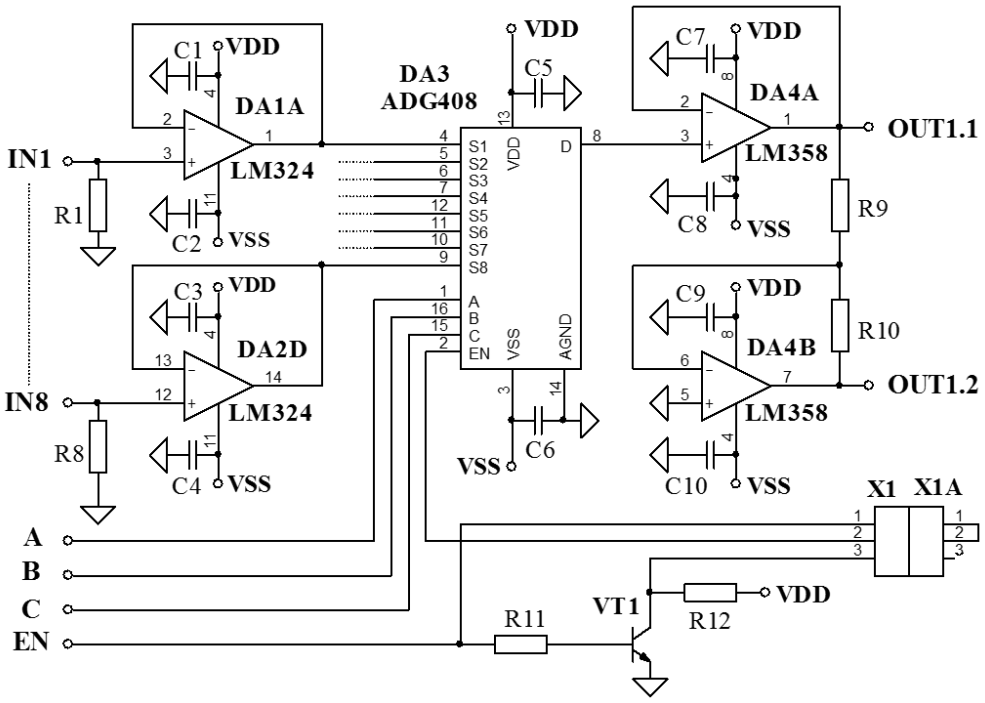

Fig. 2: Circuit Diagram of 8-Channel Analog Multiplexer (MX1.1, MX2.1)

The output voltage of the multiplexer DA3 (ADG408) [8] is applied to the output of the DCM Out1.1 via buffer amplifier DA4A (gain G= 1) and to the output Out1.2 via inverting amplifier DA4B (G = -1). Consequently when the voltage of the output Out1.1 fluctuates from 0 to 2V, then the voltage of Out1.2 fluctuate accordingly from 0 to -2V at the same time.
The input signals are being switched to the output of the multiplexer DA3 in accordance with the control signals A, B, C and enable signal on input EN. When the 2-pin jumper X1A is plugged to the connector XA via pin1 and pin2, then the enabling signal activates MX1.1. Otherwise, if pin3 is short-circuited with pin2 via the jumper, the enabling signal triggers the transfer of the MX2.1 via transistor VT1. The scheme is powered by two voltages VDD = +10V and VSS = -10V.

3.2. Circuit diagram of second group multiplexers

Fig.3 shows the circuit diagram of the other group multiplexers (MX1.2, MX2.2), managing the power supply units of the sensors (DC/DC units in fig.1). The control voltages, for the inclusion of DC/DCunits, are fed to the output 1÷ 8 by multiplexer DA1 (HEF4051) [9]. The values of these voltages are determined by the ratio of the values of the resistor R9 and the resistors R1 ÷ R8. The control of these multiplexers is similar to that of the previous two multiplexers.The preference given to the analog multiplexer HEF4051 instead of using a suitable digital one is because of two reasons: first - the overall consumption of the scheme is lower and second - it allows greater flexibility in determining the value of the generated control voltages.

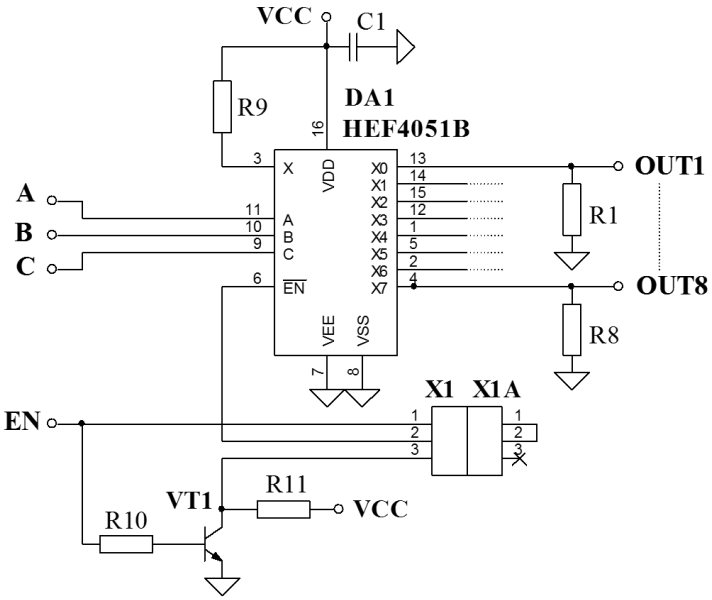

Fig. 3: Circuit Diagram of 8-Channel Analog Multiplexer (MX1.2, MX2.2)

3.3. Circuit diagram of U/I converters

Fig.4 presents the circuit diagram of voltage to current converter, plugged to the multiplexers' outputs. The output current, proportional to the input voltage, flows through the resistor R_L and creates a voltage drop equal to the input voltage, as pointed in (1).

$$U_{out} = R_L I_{out} \quad (1)$$

where:

U_{out} -output voltage of the U/I converter, [V]

I_{out}- output current of the U/I converter, [mA]

R_L - load resistance, [Ω]

The output current can beexpressed bythe voltage U_r (3), at sufficiently large gain of the transistors VT1 and VT2:

$$I_{out} = \frac{U_r}{R_6 + RP_2} \quad (2)$$

and

$$\boldsymbol{U_r = V_{CC} - U_{DA1}} \quad (3)$$

where:

$\boldsymbol{V_{CC}}$– power supply, [V]

R_6–resistance, [Ω]

RP_2 – potentiometer, [Ω]

With the amplifier DA1B it is achieved an offset of the input signal, providing compliance between the zero values of the output and input voltage.

The output voltage of the amplifier DA1A can be expressed like in (4):

$$U_{DA1} = U_{off}\left(1 + \frac{R_2}{R_1}\right) - U_{in}\frac{R_2}{R_1} \quad (4)$$

where:U_{off} is output voltage of voltage divider R_3, RP_1, R_4.

The potentiometer RP_1 is used to adjust the value of the load current to zero ($I_{out} = 0$), if the input voltage is zero U_{in} = 0. When the input voltage is 2V (U_{in}=2V), with the potentiometer RP_2 the current value through the load is changing to 20mA. The maximum output voltage is 2V at a load current of 20mA and R_L = 100Ω. For fine adjustment of the scheme, both settings can be performed sequentially several times. The maximum length of the connecting wires (between U/I converter and WSN 3202) is determined, so that the maximum resistance of the circuit would not exceed 40Ω.

For ensuring high stability of the output current, the supply voltage (common for both part of the scheme) should also be applied with very high level of stability. Both amplifiers are supplied with voltages: $VDD = +10V$ and $VSS = -10V$. For normal functioning of the converter, the value of the voltage VDD is determined by the condition (6).

$$VDD \geq VCC + 2V \quad (6)$$

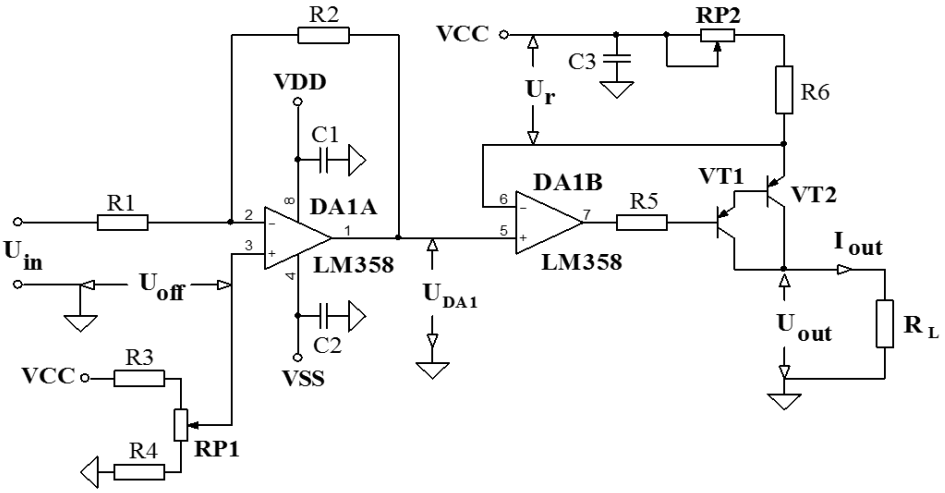

Fig. 4: Circuit Diagram of U / I Converter

3.4. Circuit diagram of DC/DC converters

The last component of this DCM is the universal converter DC/DC, displayed on Fig.5, ensuring the necessary autonomous supply voltages for the sensors and multiplexers MX1.1 and MX2.1 (DC/DC 1÷DC/DC16 on Fig.1). When the voltage of the battery vary in the wide range (2.5 to 5,5 V), the proposed converter generates the stable DC voltages +5 V (VCC) and ± 10V (VDD, VSS). The MCP1252 converter has extremely low supply current and low external parts count, which makes it ideal for small, battery-powered applications [10]. A shutdown mode is also provided for further power reduction. The second converter MAX680 provide ±10V outputs from a +5V input voltage [11]. This device is suitable for a variety of applications that need both positive and negative voltages, generated from a single supply. When the supply voltage is applied to the sensor, the output voltage can be trace with System Manager, as shown on Fig.10.

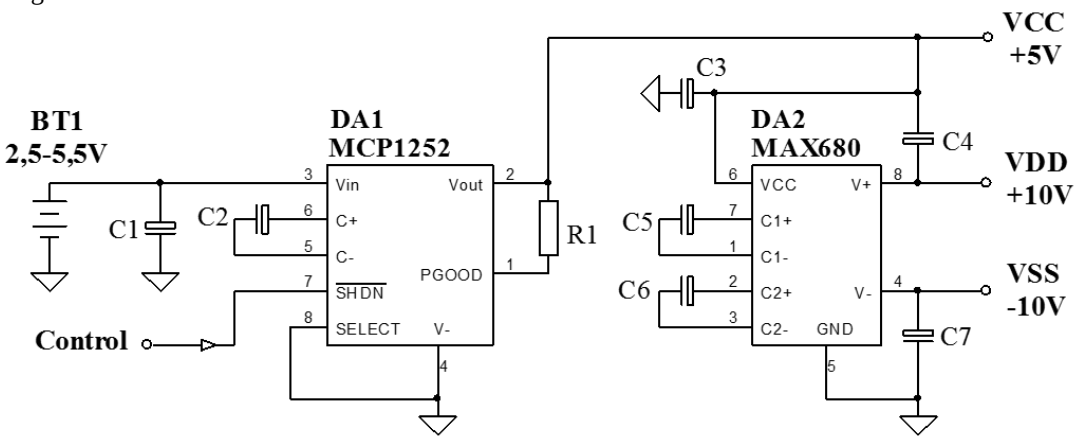

Fig. 5: Circuit Diagram of DC/DC Converter

Finally, the functionality of the proposed schemes was simulated with Multisim, following by elaboration of their PCB designs (Fig.6). The experimental studies confirmed the working capacity and the efficiency of the modules.

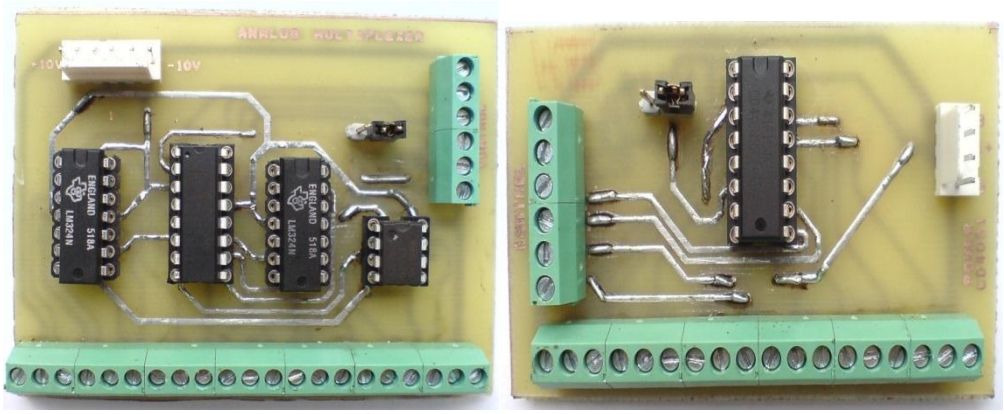

Fig. 6: PCB Design of Multiplexers –A) MX1.1, MX2.1; B) MX1.2, MX2.2

4. Software implementation consideration

The proposed DCM is part of WSN-based system for remote monitoring ofenvironmental parameters of workplace. The software configuration andmanagement of overall system is performed by LabVIEW.LabVIEW is a powerful graphical programming environment for quickly development of application for control, data acquisition and analysis. LabVIEW programs are called virtual instruments (VIs). Each VI has three components: a blockdiagram, a front panel and a connector panel. The last is used to represent the VI in the block diagrams of other, calling VIs.

Fig.7 contains a screenshot of the block diagram of VI for management of the first group multiplexers (MX.1.1, MX2.1), collecting data from the sensors. Data from the sensors are applied to *AIO* of the DCM. The logic follows an iterative process inside a *While* loop for save the data stream in 16 shift registers*y, z...o, i* (one for each sensors). The multiplexers' outputs are managed by MathScript node, where the data are normalized to the actual parameters of the sensors by appropriate formulas. Finally, all the data are displayed on XY Graphs. For further analysis, all collected data from sensors are logged to files.

This system aims not only to manage the multiplexers, but also to collect and effectively save data from different types of sensors. The system allows adjustments of the operating time of each of the sensors by pause (s) (located in the program code), in order not to work permanently, which shoulddecrease the energy consumption. For maximum system efficiency the sensors have different time slot for the measurements. The minimum power consumption of the sensors is a very important indicator of the system, because the sensors in the modern WSN have autonomous power supply, which can power them up to 10 years.

The Flowchart on Fig. 8 illustrates the operation principle of the system, how to manage the multiplexer and how to save the data consistently. The Case – structure submits various control instructions to themultiplexer in binary code.This structure is responsible for recording the parameters in the buffer and subsequently, to output data from this structure. Reading of "i" depends on the performance of the cycle. When "i" = 16 the cycle is interrupted andstarts the execution of the next cycle. In LabVIEW it's represented by the *for loop*.

The next part of the flow chart is a cycle that determines the number of the measurements and the time interval between every two measurements. This part of the program is the outer cycle *While loop* on fig6. It is also responsible for keeping the information up to the moment when the STOP button is pressed, which breaks the cycle and passes the data to *XY Graphs* for plotting the graphics. The proposed program allows management of sixteen sensors that are connected to one input of the node WSN 3202.

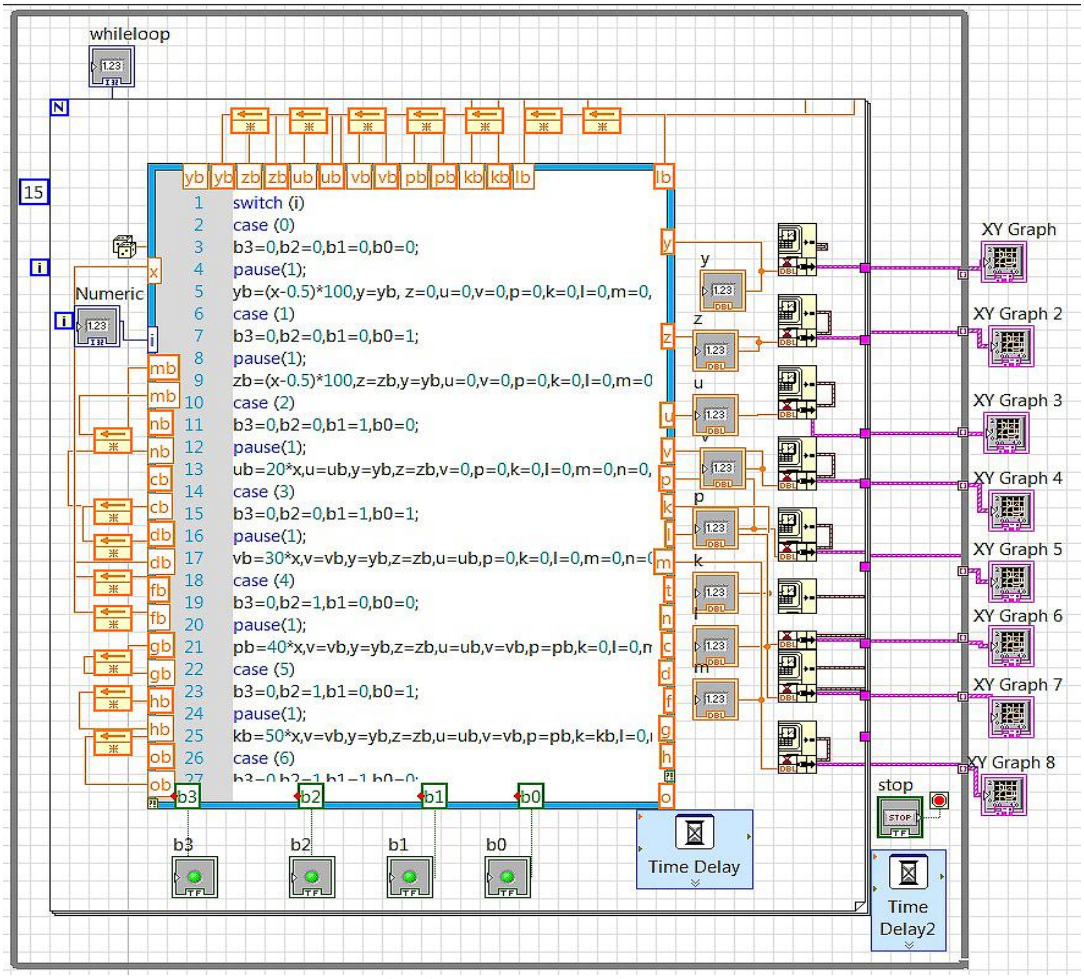

Fig. 7: Block Diagram of VI for the Management of Multiplexers MX1.1 and MX2.1

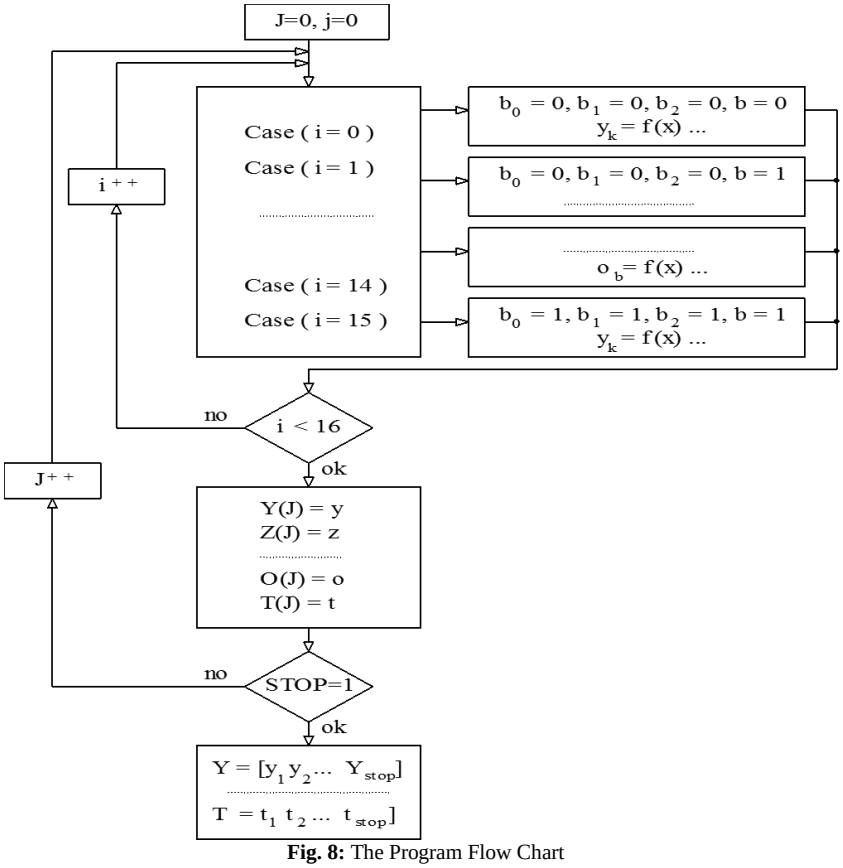

Fig. 8: The Program Flow Chart

5. Test the overall system operation

To test the functionality of the overall system in the context of its application for monitoring the environmental parameters of workplace, it was realized the next scenario. The proposed system is used for measurement of the velocity of the indoor air flow. As required for optimum working conditions, the velocity of the air in the room should be from 0.2 to 0.5 m/s. The maximum velocity of the air flow for indoor activities should not exceed 1m/s.When the air flow is over 5m/s it is not recommended to work in this room. It should be taken into account that the rate of the air movement in a room strongly depends on indoor air temperature. The higher room temperature presupposes an increase in comfortable area limits.

The next paragraph represents the measurement procedure. The air flow sensor is connected to input 1 of the multiplexer MX1.1. The overall measurement system is depicted in Fig.9. The WSN node 3202 (1) communicates wirelessly with the gateway 9791. The output of the multiplexer MX1.1 (2) is connected to the analog input AI0 of the node. The above-described LabVIEW programs used for data acquisition, displaying and logging data to specific lvm measurement files for further analysis and processing. The air flow sensor (4) is fed from DC/DC converter (5), managed by the multiplexer MX1.2 (3).The control of both multiplexers is performed by digit outputs (DI01÷DI04) of the node through four bits digital code. The block (6) is autonomous power supply of DC/DC converter (5).

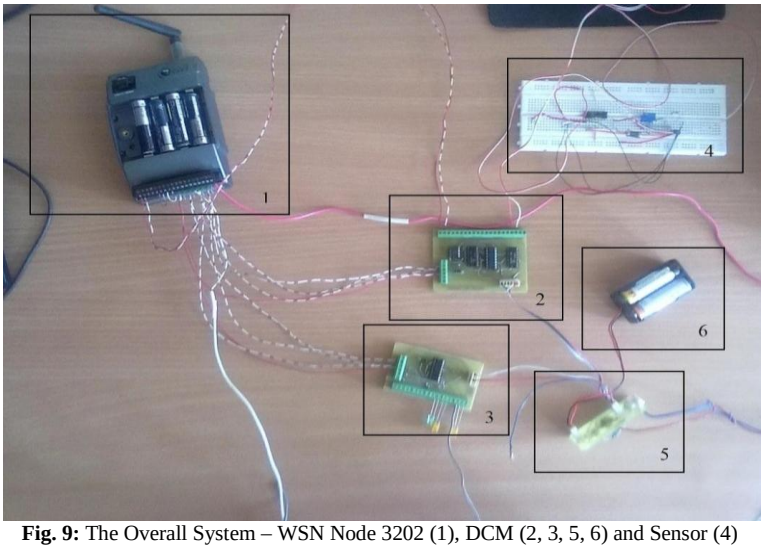

Fig. 9: The Overall System – WSN Node 3202 (1), DCM (2, 3, 5, 6) and Sensor (4)

When submitting the correct code “0001”, the sensor gets supplied and transmits voltage to the node. The code “1111” turns off all the sensors. The correct operation of the measuring system can be traced through System Manager, as shown on fig.10. The LabVIEW code is used to present the data in an intuitive fashion to a non-specialize end-user. Fig.11 displays the graph of the monitored parameter. The two peaks of the characteristic correspond to higher velocity of air in the room when the door or windows are the open. The results show that the working conditions are suitable for work from the “velocity of the air” point of view. The system operates successfully and has possibility for connecting more sensors to it, for better research onquality of the work environment in the room.

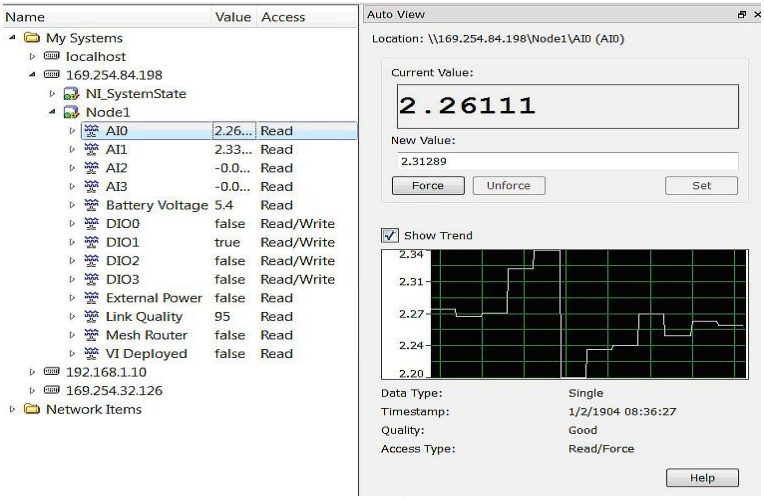

Fig. 10: Screen Shot of System Manager

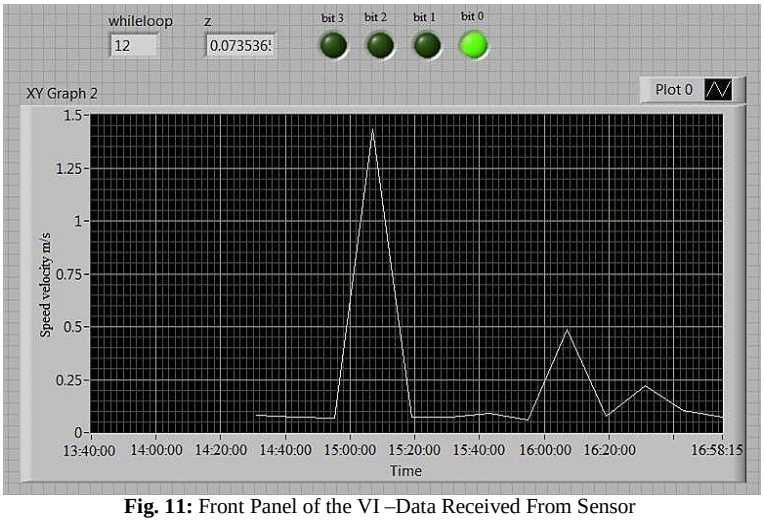

Fig. 11: Front Panel of the VI –Data Received From Sensor

6. Conclusion

The main contribution of this paper is the efficiency and universality of the proposed data collection module. Among its many features, the most salient one is its ability to provide autonomous power supply for the sensors and the multiplexers.

Our idea is to build universal, low cost WSN based system for remote monitoring of a great variety of the environmental parameters. The proposed DCM expands the capabilities of NI WSN node 3202. This opens up a great range of new applications. Through practical data acquisition, it was proved the reliable performance and proper operation of the system.

Our future work will include additional research and achievement of wholly functioning WSN-based systemfor measurement of the indoor environmental parameters; low-cost customized hardware design for integration of the necessary sensors to the proposed DCM and implementation of LabVIEW project that enables distance monitoring and experimental studies.

Acknowledgements

This work was supported byOP"Competitiveness" of EU under Grant BG161PO003-1.2.04 – 0044-C0001/20.08.2013"Development of sustainable capacity of a center for applied technology related to health".

References

[1] Peng, Y., Yong, X., Peng, X.Y., "GEMS: A WSN-based greenhouse environment monitoring system", IEEE Conf. I2MTC'2011, Graz, Ausria, 10-12 May2011, pp.1-6, 10.1109/IMTC.2011.5944132

[2] Zuo, X., Gao, W., Zhang, G., Zhao, J., Xia, D., "Design of environmental parameters monitoring system for watermelon seedlings based on wireless sensor networks", Intern. Journal Applied Mathematics&Information, 2011, 5, (2), pp.243-250

[3] Gomez, C., Paradells J., Caballero, J., "Sensors everywhere: wireless network technologies and solutions", F.V.E., Spain, 2010

[4] Stamatescu, G., Sgarciu V.,"Integration of wireless sensor networks with virtual instrumentation in a residential environment ", U.P.B. Sci. Bull., 2013, 75, (2), pp.41-52

[5] NI:'NI Wireless sensor network' , http://www.ni.com/wsn/

[6] Trifonova T., Markova V., V. Draganov, K. Angelova,V. Dimitrov, "Smart sensor network for ergonomic evaluation of working environment" , Proc. XLVIII Int.conf. ICEST2013, Ohrid, Macedonia, vol.1, pp.371-374 June, 2013http://www.icestconf.org/images/proceedings/icest_2013_01.pdf

[7] Trifonova T, V. Markova, V. Draganov , Development of smart sensor for monitoring relative air humidity in the workplace, Proc. Inter. Conf. ELECTRONICS' 2013, Sozopol, Sept 2013

[8] ADG408 datasheet:http://www.analog.com/static/imported-files/data_sheets/ADG408_409.pdf

[9] HEF4051B datasheet: http://www.nxp.com/documents/data_sheet/HEF4051B.pdf

[10] MCP1252 datasheet:http://ww1.microchip.com/downloads/en/DeviceDoc/21752a.pdf

[11] MAX680 datasheet: http://datasheets.maximintegrated.com/en/ds/MAX680-MAX681.pdf