International Journal of Engineering & Technology, 7 (3.36) (2018) 201-206

International Journal of Engineering & Technology

Website: www.sciencepubco.com/index.php/IJET

Research paper

Comparison of 5 GB/s WDM Optical System for Different Modulation Format Using Polarization Interleaving Technique.

Saif H. Abdulwahed[1], Adil Hameedshakir[2], Fahamahassoonsalman[3], Mohannad A. M. Al-Ja'afari[4],Ameer H. Ali[5].

Najaf Technical Institute, Al-Furat Al-Awsat Technical University, 31001 Al-Najaf, Iraq

Abstract

In this paper investigates a Polarization Interleaving (PI) technique with two modulation format (direct modulation and Carrier Suppressed Return to Zero (CSRZ)) for application in long haul optical system to mitigate the effects of the dispersion and nonlinear. The system is designed with 5 GB/s, 200 Km, 100 GHz channel spacing Wavelength Division Multiplexing (WDM) four channels. The simulation results are validated by analyzing the Quality Factor (Q-factor) versus power and Bit Error Rate (BER) versus Signal-to-Noise Ratio (SNR). It is found that there is an improvement in channels after the PI. For optical direct modulation at 6 dB SNR, an improvement about (0.4 0.8 and 0.6) orders of BER for channel 1, 3 and 4 respectively, while the same performance in channel 2. In CSRZ for the same SNR an improvement of (6.6 4.6 4.8 and 6, 4) orders of BER for channels 1 2 3 and 4 respectively. While in the term of Q- factor of P_o=0 dBm. For optical direct modulation in improvement of (2, 3.2 and 0.7) for channel 1, 3 and 4, and there is a reduction in performance to the channel 2about 0.5 Order. An improvement (41.5, 31.7, 39 and 35.7) order of BER for 1,2,3,4 channels respectively. Generally, the threshold power after polarization technique has been improved about (0.5, 10) orders in term of optical direct modulation and CSRZ respectively. All results are expressed in form of BER verses SNR and Q-factor verses power.

Keywords: *Polarization interleaving PI, direct optical modulation, carrier suppressed return to zero CSRZ*

1. Introduction

The variety of services offered in optical communications has driven to increase the demand for optical transmission because it provides a wide bandwidth and a high spectral efficiency[1].The addition of more channels by reducing the distances between the channels also the increased data rate has led to increased crosstalk and increase the nonlinear and distortion effects that disturb the signal in long distances, especially Four Wave Mixing (FWM), which is the most important factor in the destruction the signal in the Dense Wavelength Division Multiplexing(DWDM) systems[2].One of the techniques used to reduce the FWM problem is the PI technique which employed in several studies to improve spectrum efficiency such as:Haider J. Abd, et. al., 2013, demonstrate an approach to make a reduction in nonlinear optical impairments by utilisingPI technique, it was found that the FWM power was drastically reduced to -64 dBm when the polarization technique was used[2].Juhao Li, et. al., 2013, have been proposed an experimentally 40-Gb/s PIOrthogonal Frequency Division Multiplexing – Passive Optical Network (OFDM-PON) with double sideband modulation for high speed next generation optical access network[3].Junfei Shi, et. al., 2014, presents a cost-effective 40Gb/s transmission scheme for OFDM-PON over 100km Single Mode optical Fiber(SMF) based on double-sided multiband and PI[4].LeebaBabu, et. al., 2016, used the Fiber Optical Parametric Amplifiers (FOPA) that used for multi-wavelength amplification in WDM systems. They used parallel polarized pumps and PI of WDM signals can be used, leading to an additional improvement in the signal quality. By mitigating the crosstalks by these techniques, WDM signal quality can be improved and hence high performance FOPAs can be designed for use in WDM communication systems [5].Bangjiang Lin, et. al., 2017, experimentally demonstrate optical Multiple Inputs and Multiple Outputs (MIMO) transmission for-Non-Orthogonal Multiple Access (NOMA) based Passive Optical Network (PON) using PI [6].

2. Overview

The odd numbers of channels are fed to the multiplexer and passed to the polarization controller which it changes the States Of the Polarization (SOP). The even numbers are multiplexed and followed by polarization controller with a 90° phase shift. At the end of transmission part, the channels are multiplexed using polarization complainer to combine the output signals from each polarization controller. The received signal will be processed by the polarization splitter to separate the orthogonally polarized signals from each other. Demultiplexers are used to allocate each signal to its receiver.The general block diagram of the entire optical system is shown in Figure 1.

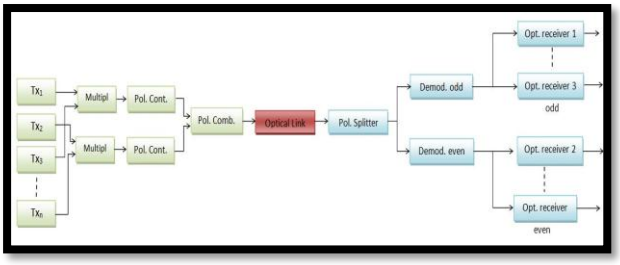

Fig 1: Block diagram of the proposed optical system.

Copyright ©2018 Authors. This is an open access article distributed under the Creative Commons Attribution License, which permits unrestricted use, distribution, and reproduction in any medium, provided the original work is properly cited.

The stander equations of the PI at the receiver side are described as follow[7]:

$$E_n = I_n + \sqrt{\varepsilon}[I_{n+1} + I_{n-1} + I_{n+2} + I_{n-2} + \cdots] \quad \textbf{(1)}$$

$$i_n(t) \propto |E_n|^2 = |I_n|^2 + \sqrt{\varepsilon}[I_n.I_{n+1} + I_n.I_{n-1} + I_{n+1}.I_{n-1} + \cdots] + \varepsilon[|I_{n+1}|^2 + |I_{n-1}|^2 + |I_{n+2}|^2 + |I_{n-2}|^2 + \cdots] \quad \ldots(2)$$

Two types of modulation schemes will be explained in this paragraph. The first one is the ordinary optical transmitter, which consists of Continue Wave CW-laser and an electrical signal fed into the Mech-Zender modulator as shown in Figure 2, and the second is the CSRZ.This type is characterized by phase alternates between the adjacent bits by the π.So that, in even position of bits (2n), the signals have a 0 degree phase shift, and in odd position of bits (2n+1), the signals have a π degree phase shift.It's produced by passing the Non-Return to Zero (NRZ) signal to the Mach Zehnder Modulator (MZM) modulator to achieve the optical signal that modulated a gain with sign pulse generator by another MZM modulator. This mechanism can be illustrated by Figure 3[8,9].

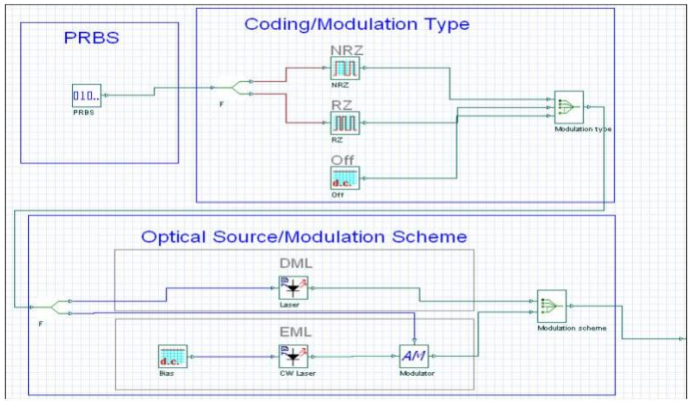

Fig 2: Block diagram of the direct modulation schemes.

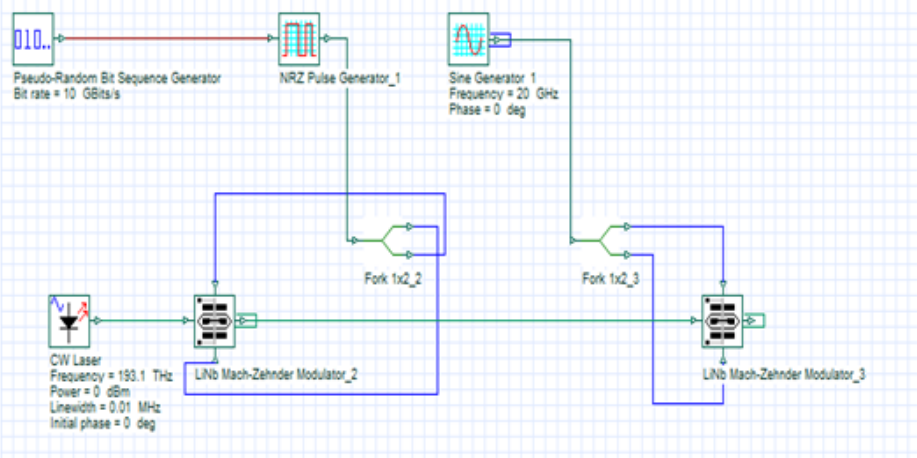

Figure 3: Block diagram of the CSRZ modulation schemes.

3. Design and simulation

In our system, a comparison between an optical system with and without PI technique has made. Figure 4 shows four channels WDM system with 100 GHz spacing between each channel.

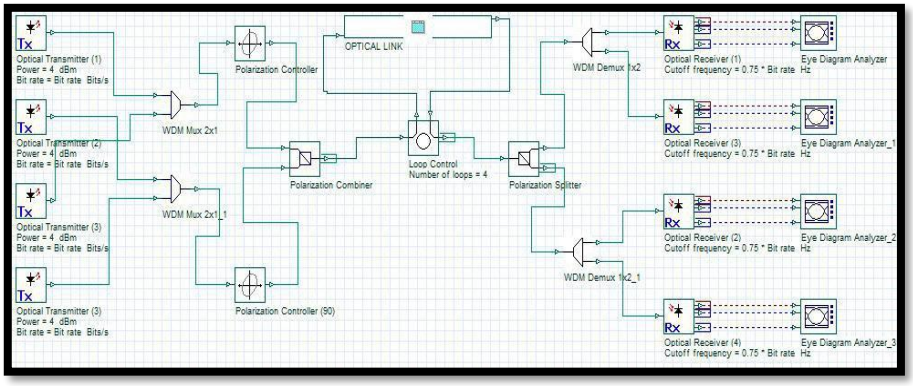

Figure 4: software layout of the proposed system.

The optical fiber link that showed in the Figure (5) consists of four loops. Each loop has (50Km) fiber length with attenuation of (0.2 dB/Km). An amplifier will reduce the attenuation of the fiber link with a gain of (10 dB).

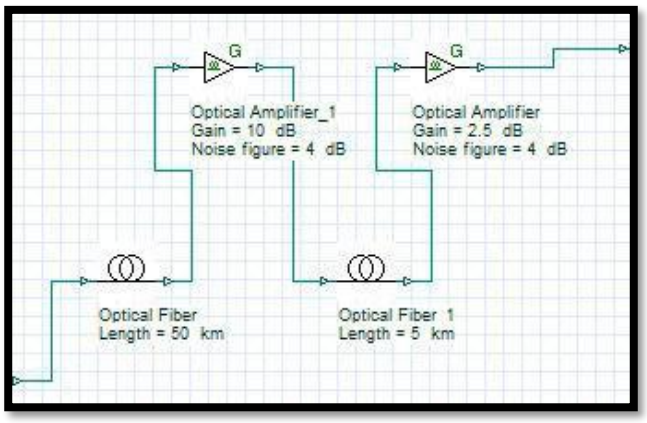

Figure 5: Optical link diagram of the system.

A Dispersion Compensation Fiber (DCF), with following parameters length (5 Km), attenuation (0.5 dB/Km) and dispersion (-167.5), used to remove the dispersion in the optical fiber. Finally, in the single loop, there is an amplifier with (2.5 dB) gain to eliminate the attenuation of the (DCF) link. The signal traveled through (200 Km) fiber length to the receiver.The data rate of the system is (5 Gb/s). With two modulation schemes (ordinary optical transmitter and CSRZ), the performance of the system was evaluated in terms of the versus BER and power versus Q-factor for each channel (even and odd channel) of the optical PI scheme.

4. Results and discussion

Figures 6 to 9 show that the performance of the BER versus SNR for four channels with and without PI. It can easily be seen that the performance in CSRZ is better than the performance of direct modulation after PI. In this scenario, the BER of each channel will evaluate at SNR=6 dB. The BER performance of the channels is (-5.6, -6, -6.6 and -5) for direct modulation while the CSRZ is (-11.8, -10.6, -10.6 and -10.8) for channel 1 to 4 respectively. We can see that channel 1 has the best performance, while the channel 4 overcomes the channels 2 and 3 that they have the same performance.

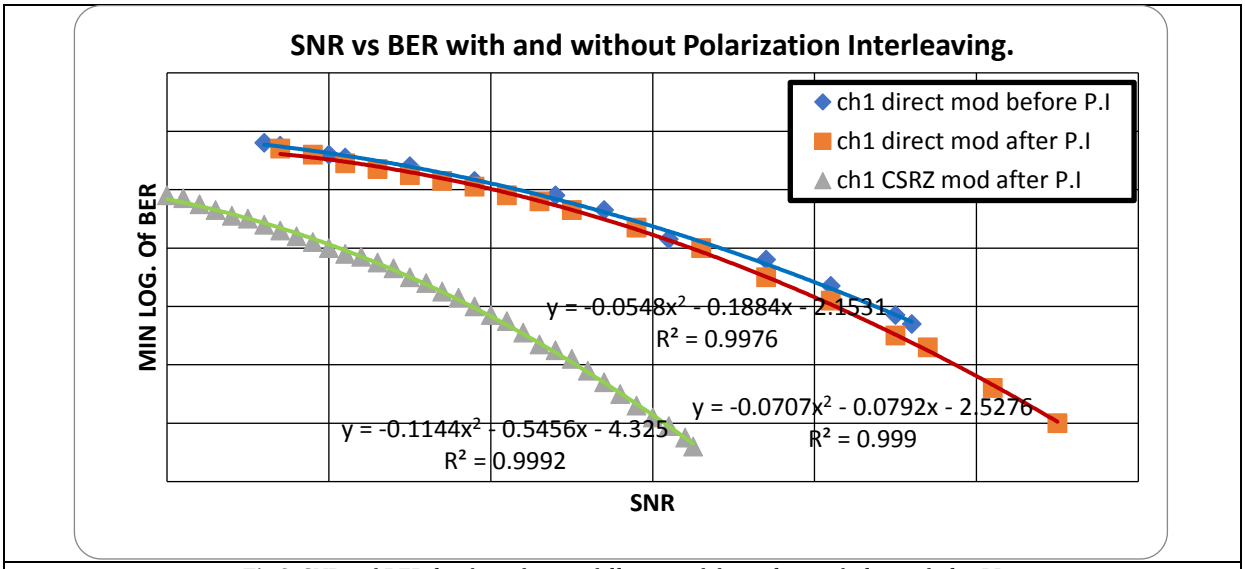

Fig 6: SNR and BER for channel one at different modulation formats before and after PI

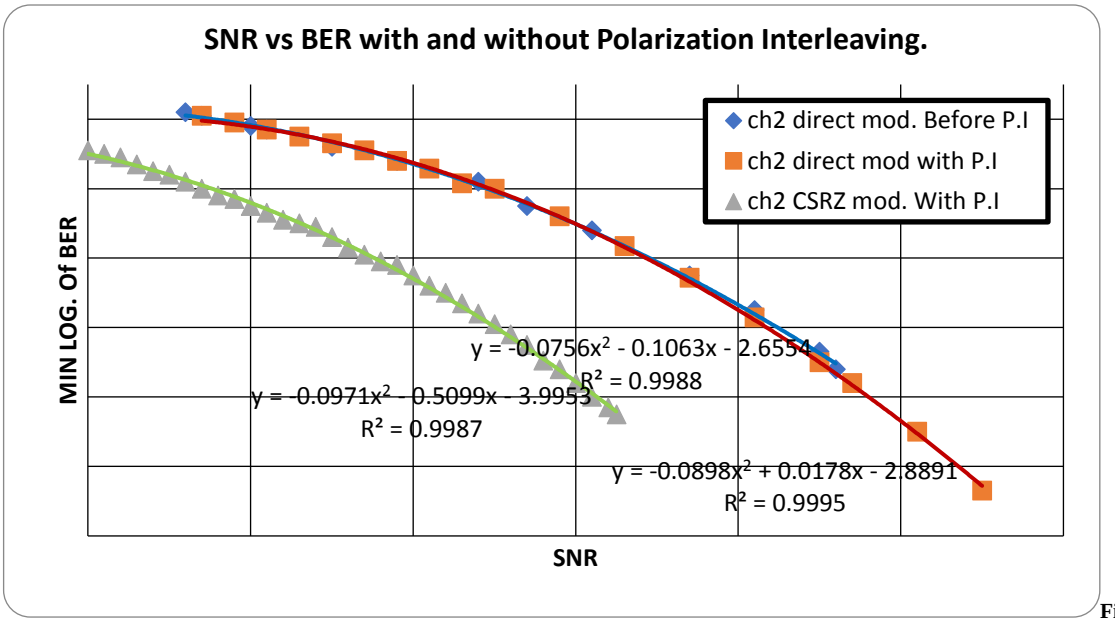

Fig 7: SNR and BER for channel two at different modulation formats before and after PI.

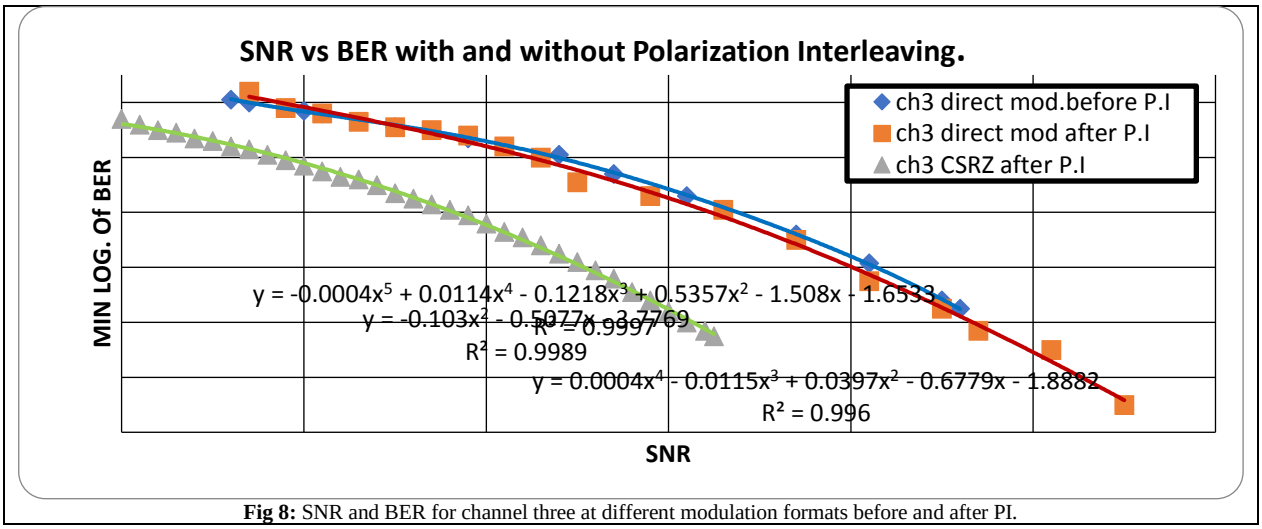

Fig 8: SNR and BER for channel three at different modulation formats before and after PI.

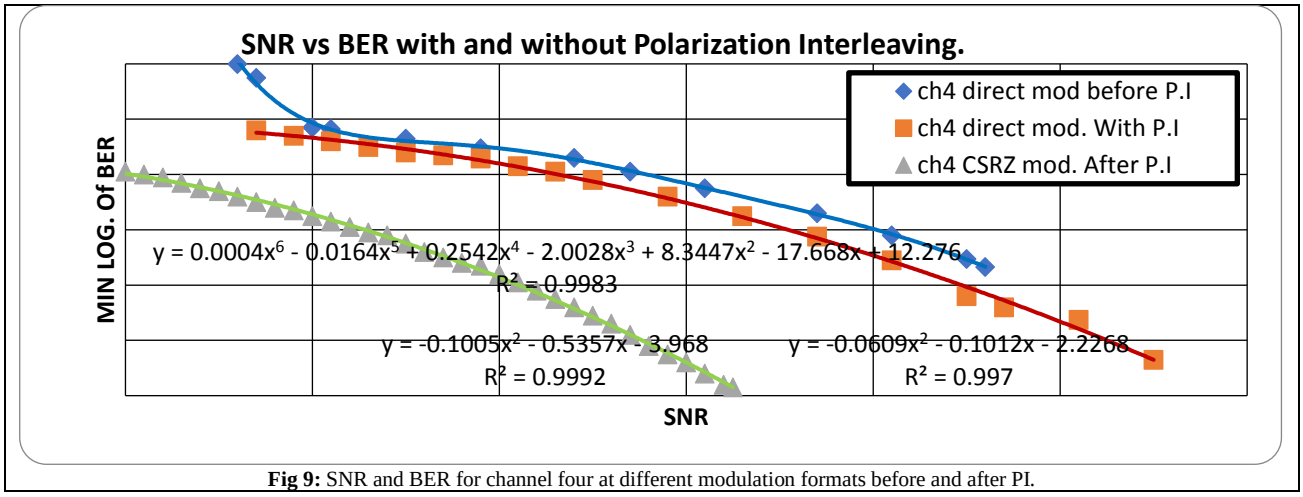

Fig 9: SNR and BER for channel four at different modulation formats before and after PI.

Figure 10 illustrated the behavior of the system before PI for direct modulation precisely channel four has the best performance at the threshold point nearly 0dB while generally all channels lave convergent beveller After PI as seen from Figure 11 the performance of the WDM system has been improved and that can be observed by the shifting of the threshold point about 3 orders in power. That mean whatever the power of the channel increased after PI (that less impairments) with reach the threshold point is better than increasing the power in case of before PI Now for figure 12 the performance of system with CSRZ after PI has a threshold power at 10 dBm and that clearly an improvement has been observed For comparison purpose channel four has been taken, At 0 dB, the Q-factor in case of direct modulation before PI 28 and after PI 29.8 while in case of CSRZ modulation it was 65 so the improvement by 37 order in case of CSRZ and 1.8 order in case of direct modulation after PI.

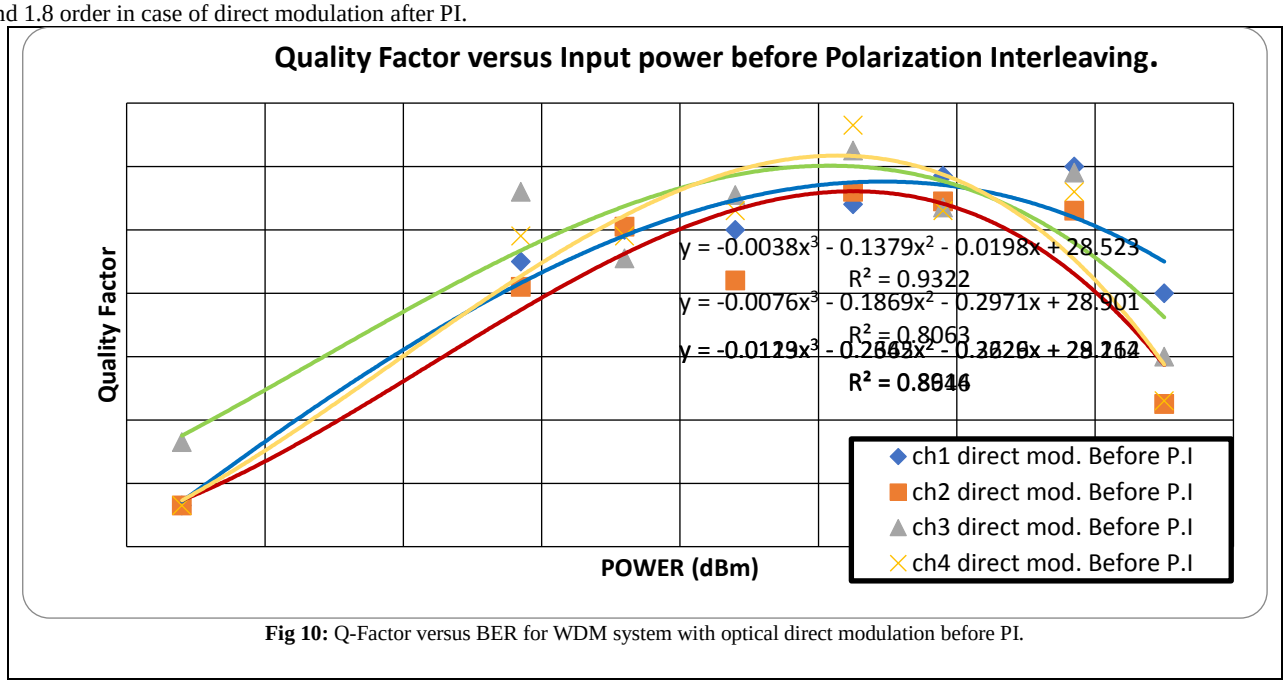

Fig 10: Q-Factor versus BER for WDM system with optical direct modulation before PI.

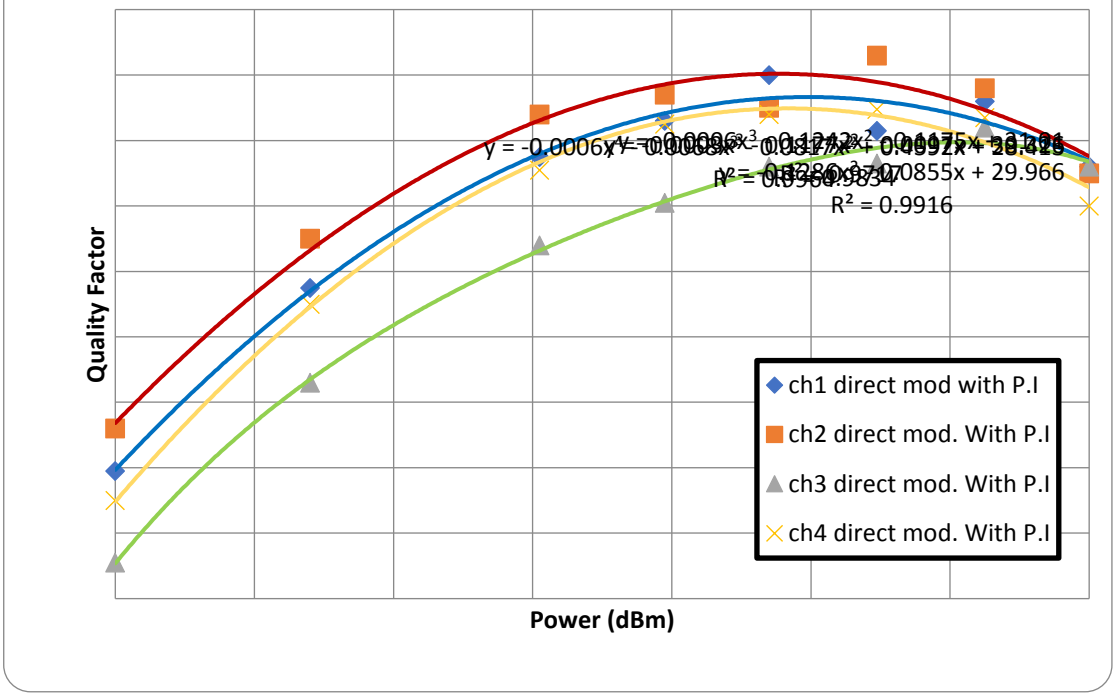

Fig 11: Q-Factor versus BER for WDM system with optical direct modulation after PI.

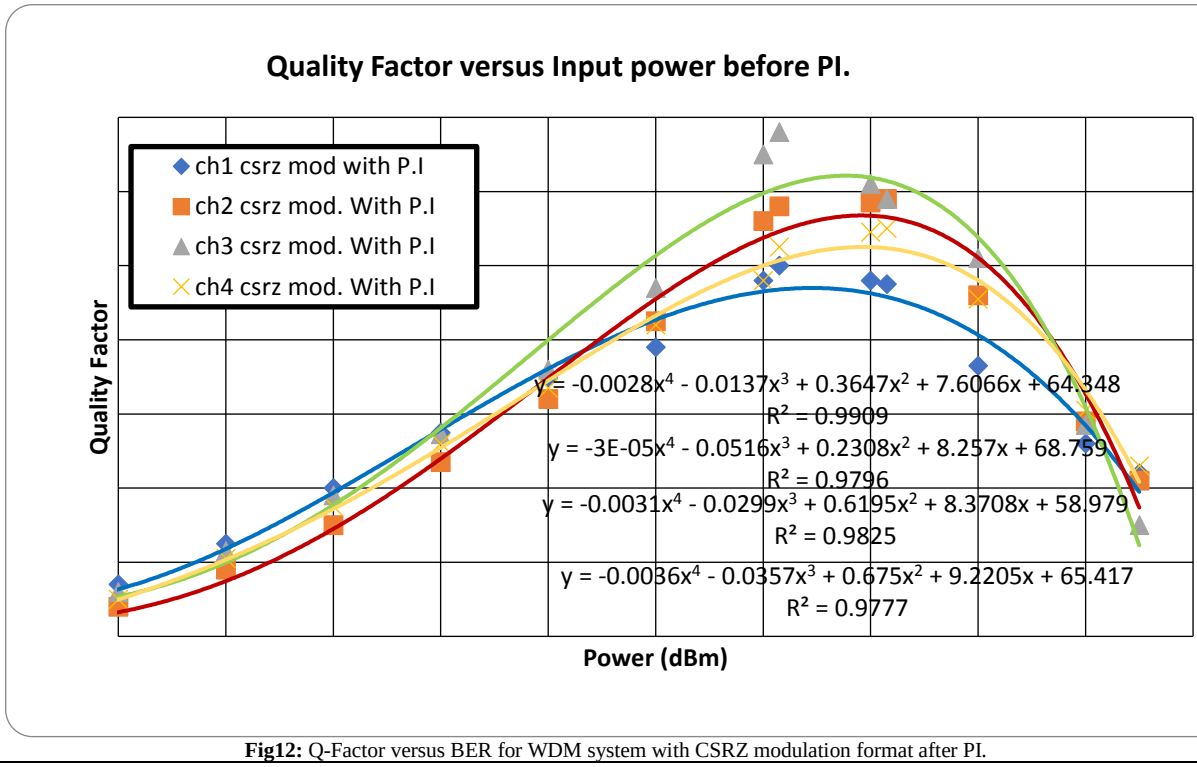

Fig12: Q-Factor versus BER for WDM system with CSRZ modulation format after PI.

5. Conclusion

It is clear that the nonlinear effects have severe damage to optical signals, especially at long distances. The PI technique was used for a 200 km long optical system with four channels spaced by 100 GHz away, for two modulation scheme (direct modulation and CSRZ). CSRZ gives more reduction in the nonlinear effect as well as better performance in the behavior of WDM system than direct modulation. In term of BER at SNR, there is an improvement about (6.6, 4.6, 4.8 and 6, 4) orders for channels 1 2 3 and 4 respectively.An enhancement by order (41.5, 31.7, 39 and 35.7) have been achieved in term of Q-Factor at power = 0 dBm for 1,2,3,4 channels respectively. And threshold power improved by (0.5 and 10) for optical direct modulation and CSRZ respectively.

References

[1] Saif H. Abdulwahed 'Investigation in the dispersive medium of the FRFT and its effect on WDM system' International Journal of Advanced Computer Research, Volume-5 Issue-20 September-2015.

[2] Haider. J. Abd et al ' Mitigation ofFWM Crosstalk in WDM SystemUsing Polarization Interleaving Technique', 978-1-4673-6075-3/13/2013 IEEE.

[3] Juhao Li et al ' Polarization-interleaved OFDM-PON with DSBModulation', 978-1-4799-0434-1/13/2013 IEEE.

[4] Junfei Shi, et. al.,'40Gbps Double-sidedMultiband OFDM-PON based on Polarization interleaving and Direct Detection',978-1-4799-6507-6/14/2014 IEEE.

[5] LeebaBabu, et. al.'Performance Analysisof CrosstalkSuppression in WDM System with FiberOptical Parametric Amplifier', International Journalof Advanced Research in Electrical, Electronics and InstrumentationEngineering, Vol. 5, Issue 2, February 2016.

[6] Bangjiang Lin, et. al., 'Optical MIMO NOMA-PON based on single carrier transmission and polarization interleaving', Optical Fiber Technology36 (2017) 412–416.

[7] Saif H. Abdulwahed,Master Thesis,University of Technology Baghdad.

[8] Saif H. Abdulwahed ' Mitigation of fiber nonlinearity effects in ultra-high dense WDM system by using FRFT for 32 channel system' , Eng. & Tech. Journal,Vol.34, part (A), No.1 , 2016.

[9] Saif H. Abdulwahed'8×10 Gbps optical system with DCF and EDFA for different channel spacing', International Journal of Advanced Computer Research, Vol 6(24),2016.