International Journal of Engineering & Technology, 7 (3.36) (2018) 181-184

International Journal of Engineering & Technology

Website: www.sciencepubco.com/index.php/IJET

Research paper



Hybrid Technique for Piezoelectric Operating Frequency Tuning

Murtadha Shaheen[1*],Sabah Mohammed Mlkat Al Mutoki[2],Ishraq M. Tufeik[1] and Karla Mossi[1], Ahmad Ghanim Wadday[3]

[1]Department of Mechanical and Nuclear Engineering, Virginia Commonwealth University, 401 W Main St, Room E3237, Richmond, VA 23284, USA

[2]Al Furat Al Awsat Technical University,Samawa Technical Institute

[3]Al Furat Al Awsat Technical University

**Corresponding Author E-mail: almalikima@vcu.edu*

Abstract

The maximum electrical power is extracted from the piezoelectric generator when the resonance frequency matches that of the environmental vibration. To address this issue, mechanical or electrical tuning, and bandwidth widening strategies have been introduced. Mechanical tuning can be achieved by adjusting the mass or length of the structure. For electrical tuning, a shunt capacitor can be used to change the stiffness of a piezoelectric structure. The bandwidth widening can be accomplished by exploiting an array of structures each with a different resonant frequency. In this paper, a hybrid system using a multi piezoelectric bimorph cantilevers is deployed. This is based on achieving mechanical tuning, electrical tuning, and bandwidth widening simultaneously to develop a significant increment in piezoelectric frequency range. This method is performed by using three bimorph cantilevers. Each one has the same natural frequency, but using two different tip masses by mechanical tuning will result in three different natural frequencies. These cantilevers are connected in series to have a wide bandwidth energy harvester.

Keywords: *Piezoelectricity, energy harvesting, frequency tuning*

1. Introduction

Different wireless and portable applications have been developed in recent years providing convenience and new capabilities. However, the batteries used to power such devices add to toxic waste, require repeated preservation or tedious changing the batteries, and usually results in transcending the volume required for some applications (Kong et al., 2010). As a remedy to this issue, energy harvesting systems have been introduced by researchers and different environmental energy sources such as sunlight, wind, heat, and vibration, can be utilized for energy harvesting. The vibration can be found almost ubiquitously in our daily life and, hence, have fascinated much research attention (Tang et al., 2010,Hsu et al., 2014, andKok et al., 2011)). Vibration energy harvesters deliver the maximum output electric power when working at resonance, which means that the harvesters are not efficient and effective in environments with indiscriminate vibrations or vibrations with time dependent frequencies.

To date there are, in general, two approaches to resolving this problem. The first is to amend, or tune, the resonant frequency of a piezoelectric generator so that it matches the frequency of the environmental vibration at all times. This can be accomplished by altering the mechanical characteristics of the structure or electrical load on the harvester and they are called mechanical and electrical tuning strategies (Zhu et al., 2010 and Xue et al., 2008). The second technique is to expand the bandwidth of the piezoelectric harvester and it can be accomplished for instance by using an array of piezoelectric beams with a different resonant frequency,Lallart et al. (Lallart M. et al., 2010)proposed a low-cost self-tuning method based on the properties of systems driven at their resonance and on low-cost stiffness tuning scheme described by Guyomar et al.(Guyomar et al., 2008). This technique allows a satisfactory tuning of the resonance frequency on a wide range, at all the excitation frequencies while guaranteeing a net positive energy output. A tunable resonant frequency power scavenging device in a cantilever beam form—to move its resonant frequency to match that of the ambient vibration—wasestablished by Wu et al.(Wu et al., 2006). This system utilizes a adjustable capacitive load to change the gain curve of the beam and a low power microcontroller samples the ambient frequency and alters the capacitive load to match vibration frequency in real-time. Ferrari et al.(Ferrari et al., 2008) presented a multi-frequency electromechanical piezoelectric scavengerplanned for driving autonomous sensors from ground vibrations. The harvester is collected of several bimorph beams with diverse natural frequencies, whose rectified voltage outputs are fed to a storage capacitor. They proved the possibility of consuming the converter with input vibrations across a broadband frequency spectrum, improving the efficiency of the energy conversion over the case of a single harvester. Shahruz (Shahruz, 2006b)considered the performance of mechanical band-pass filters to be utilized in energy harvesters. Such a filter consists of an ensemble of beams where at the tip of each cantilever a mass, identified as the proof mass, is attached

In this paper, a hybrid approach using a multi piezoelectric bimorph cantilevers is presented. This is based on a technique of achieving mechanical tuning, electrical tuning, and bandwidth widening simultaneously to develop a significant increase in frequency range for the vibration-based energy harvester. In this innovative work three bimorph cantilevers with the same characteristics have been used. Each one has the same natural frequency, but using two different tip (proof) masses and different lengths by mechanical tuning will

Copyright ©2018 Authors. This is an open access article distributed under the Creative Commons Attribution License, which permits unrestricted use, distribution, and reproduction in any medium, provided the original work is properly cited.

result in three different natural frequencies. These three cantilevers are electrically connected in series and mechanically in parallel to have a wide bandwidth energy harvester. Using three different ceramic capacitors for each cantilever, each one will have several hertz of frequency shifting to have an extended range of operating frequency around each individual natural frequency. Hence rather than having three resonant frequencies the system has twelve natural frequencies and maximum power peaks.

1.1 Mechanical tuning

It can be satisfied by changing either the mass of the cantilever or the length which is also ultimately considered as cantilever mass changing.
The resonant frequency of a spring-mass structure is given by(Zhu et al., 2010):

$$f_r = \frac{1}{2\pi}\sqrt{\frac{k}{m}} \quad (1)$$

Where: k is the spring constant and m is the inertial mass. When tuning the resonant frequency of the generator, one can change either the spring constant or the mass.
For a cantilever with a mass at the free end (seeFigure 1), the resonant frequency is given by (Blevins, 1979)

$$f_r = \frac{1}{2\pi}\sqrt{\frac{Y\,w\,h^3}{4l^3(m+0.24m_c)}} \quad (2)$$

where Y is Young's modulus of the cantilever material; w, h, m, l, and m_c, are the width, thickness, inertial mass, length, and the mass of the cantilever, respectively.

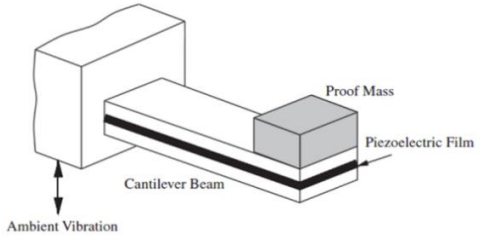

Fig 1: A cantilever with a tip mass at the free end (Shahruz, 2006a).

1.2 Bandwidth widening

In order to harvest energy efficiently from a variety of vibration sources, energy scavenger should have wide bandwidth in designated frequency intervals. A device with such a property is nothing but a mechanical band-pass filter (Shahruz, 2006b). Figure 2 shows a beam–mass system (Shahruz, 2006a) that can be made into a band-pass filter when dimensions of the beams and masses of the proof masses are chosen appropriately.

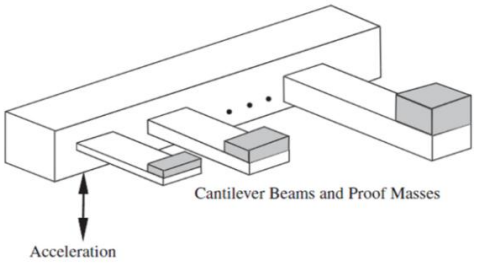

Fig 2: A band-pass filter of cantilever beams and proof masses (Shahruz, 2006a).

1.3. Electrical tuning

The basic principle of electrical tuning is to change the electrical damping by adjusting the load, which causes the power spectrum of the generator to shift (Zhu et al., 2010). By adjusting shunt circuit conditions applied across the piezoelectric layer, the effective elastic modulus of the layer changes and hence the overall stiffness of the structure changes. Since the natural frequency of the structure is dependent on its stiffness, by varying the shunt conditions, the natural frequency can be adjusted or tuned to a desired value(Charnegie, 2007). For a bimorph the upper, lower and in between natural frequency limits are represented by the following three equations respectively.

2. Hybrid technique

In this study, a hybrid technique is used for frequency tuning. By combining the three aforementioned frequency tuning techniques in one system, a new hybrid technique can be developed to have a broadband piezoelectric operating frequency spectrum. The electrical equivalent circuit for this system is shown in Figure 4. It has been implemented by using three bimorph cantilevers with different tip masses and lengths resulting in three natural frequencies.The cantilevers were connected in series and three different ceramic capacitors for each cantilever have been used. Each capacitor causes a frequency shifting to get a particular resonance frequency.The system has an extra range of operating frequency around each individual natural frequency.

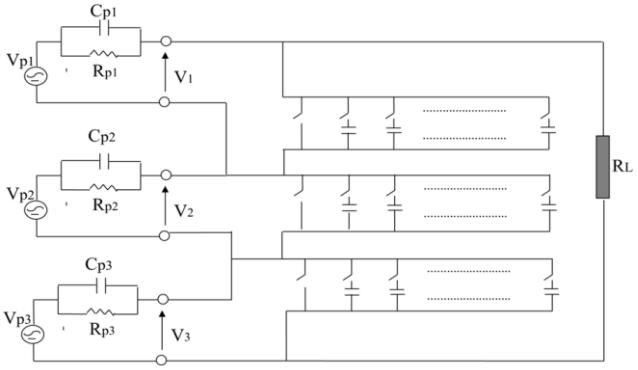

Fig 3:. Electrical equivalent circuit for the developed hybrid piezoelectric frequency tuning system.

2.1. Experimental setup

The implementation for the proposed method was performed using some equipment and electric passive devices. An arbitrary Function Generator, Tektronix type AFG 2021 (20 MHz), was used to supply a sinusoidal 80 mV peak to peak voltage to a power amplifier Bruel&Kjaer Type 2718, which was used to support a shaker (Type 4809). The shaker provides different levels of vibration acceleration which can be measured using an accelerometer, DeltaTron made by Bruel and Kjaer Type 4508B with 100 mv/g and 0.3 Hz to 8 kHz frequency range. Three similar bimorphs, manufactured by Piezo Systems, Inc. with model number T226-A4-503X (each one consists of two oppositely poled PZT-5A piezoelectric elements bracketing a brass substructure layer, and the two piezoelectric elements are connected in series (Kong et al., 2010). They have been placed properly to a thick plastic piece on the top of a bar fastened to the shaker as shown in Figure 5. A resistance decade box, TENMA made Type 72-7270, with 1Ω to 11 MΩ resistance range was used to have different load resistance values. The load resistance was connected in parallel with the bimorph cantilevers output and the shunted capacitors through serial switches to have different collections of RC parallel circuits. Type TDS2012B digital oscilloscope with 100 MHz, 1 GS/s was used to measure the output peak to peak voltage across the load resistor. Then the measured voltage was used to calculate the output power.
Each bimorph has a 110 Hz resonance frequency when its full length (6.35 cm) is used without mechanical or electrical tuning. In this work the first cantilever was tuned mechanically by adjusting

its length to 5.35 cm to have a resonance frequency of 92 Hz (no tip mass was used). The mechanical tuning was applied to the second bimorph by changing the length to 5.05 cm and using a 0.65 g tip mass to get a 99 Hz resonance frequency. A length of 4.85 cm and tip mass of 1.1 g were chosen for the third cantilever to be tuned mechanically and have a resonance frequency of 114 Hz. These three piezoelectric bimorph cantilevers have been connected in series to develop a bandwidth widening system with three main resonance frequencies of 92 Hz, 99 Hz, and 114 Hz. Two techniques have been used so far which are the mechanical tuning and bandwidth widening. To extend the operating frequency spectrum to 12 resonance frequencies instead of 3, three different capacitors with values of 55 nF, 100 nF, and 470 nF were shunted to the load resistance through manual series switches. By adjusting the stiffness for each bimorph, the resonance frequency was changed.

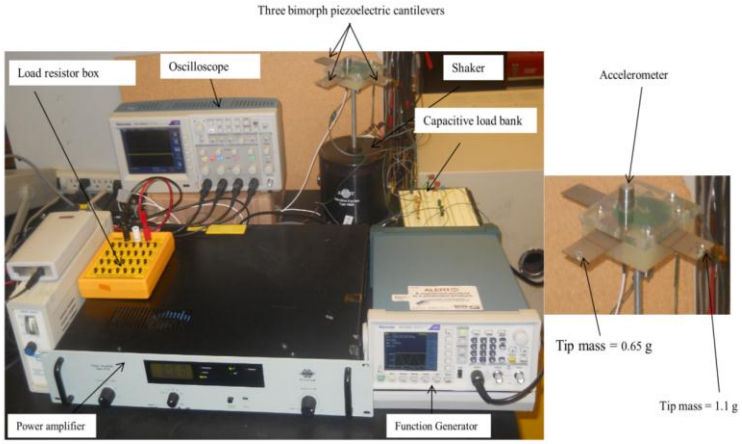

Fig 4: Experimental setup for the developed hybrid piezoelectric frequency tuning system

3. Results and discussion

Mechanical tuning and the bandwidth widening, an electrical tuning has been applied and 12 resonance frequencies have been gained. The first three frequencies resulted from the original case, in which no capacitor was connected, were 92 Hz, 99 Hz, and 114 Hz. The second three resonance frequencies of 91 Hz, 98 Hz, and 113 Hz resulted from shunting a 55 nF capacitor to the load resistance. Resonance Frequencies of 90 Hz, 97 Hz, and 112 Hz were gained using a shunt capacitor of 100 nF. The fourth group of frequencies of 89 Hz, 96 Hz, and 111 Hz was resulted from a parallel capacitor of 470 nF. It is really clear that there is a significant increase in the number of resonance frequencies using the hybrid technique for frequency tuning. The 12 average power peaks for the system with load resistance of 100 kΩ and 20 kΩ are shown in Figure 10a and 10b respectively. It can be noticed that there are 12 peaks for voltage and power at different frequencies. The maximum output voltages for all tuned frequencies were measured at a maximum load resistance of 1 MΩ, while the maximum power values were extracted at an optimal load resistance of 100 kΩ which is exactly equal to the sum of three inherent capacitive impedances connected in series as shown in Figure 4.

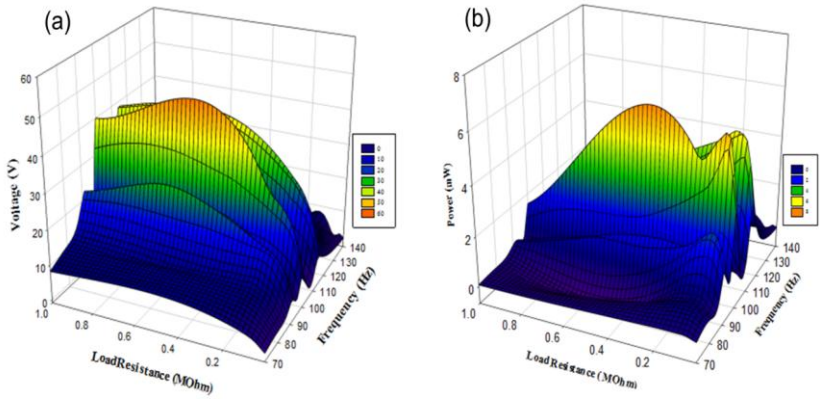

Fig 5. Experimental (a) output voltage and (b) power of the three-series cantilevers system as a function of frequency and load resistances

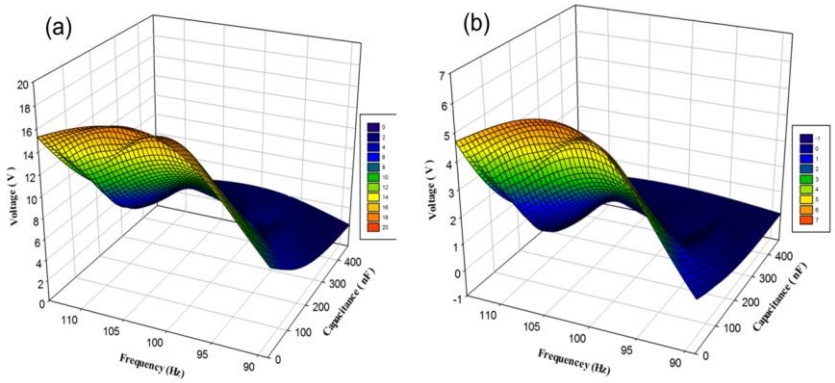

Fig 6. Experimental voltage output of the three-series cantilevers system as a function of frequency and capacitance for load resistance of (a) 100 kΩ and (b) 20 kΩ.

4. Conclusion

A hybrid system using a multi piezoelectric bimorph cantilevers was developed. This is based on a technique of accomplishing mechanical tuning, electrical tuning, and bandwidth widening simultaneously to get a significant increment in frequency range for the piezoelectric energy harvesting system. The implementation of this novel method has been performed successfully. Instead of 3 resonance frequencies, 12 resonance frequencies have been gained. The first group resulted from the original case when no capacitor was connected which has 92 Hz, 99 Hz, and 114 Hz. The second group contains 91 Hz, 98 Hz, and 113 Hz, which resulted from shunting a 55 nF capacitor to the load resistance. Resonance Frequencies for the third group were 90 Hz, 97 Hz, and 112 Hz and they were developed using shunt capacitor of 100 nF. The fourth group of frequencies 89 Hz, 96 Hz, and 111 Hz resulted from a parallel capacitor of 470 nF. It can be noticed that there is a significant increase in the operating frequencies bandwidth 9 Hz when using this hybrid technique for frequency tuning.

References

[1] Blevins RD (1979) Formulas for natural frequency and mode shape.
[2] Charnegie D (2007) Frequency tuning concepts for piezoelectric cantilever beams and plates for energy harvesting. University of Pittsburgh.
[3] Ferrari M, Ferrari V, Guizzetti M, et al. (2008) Piezoelectric multifrequency energy converter for power harvesting in autonomous microsystems. *Sensors and Actuators A: Physical*, 142(1), 329–335.
[4] Guyomar D, Lallart M and Monnier T (2008) Stiffness tuning using a low-cost semiactive nonlinear technique. *Mechatronics, IEEE/ASME Transactions on*, 13(5), 604–607.
[5] Hsu J-C, Tseng C-T and Chen Y-S (2014) Analysis and experiment of self-frequency-tuning piezoelectric energy harvesters for rotational motion. *Smart Materials and Structures*, 23(7), 075013.
[6] Kok S-L, Ab Rahman MF, Yap DF, et al. (2011) Bandwidth widening strategies for piezoelectric based energy harvesting from ambient vibration sources. In: *Computer Applications and Industrial Electronics (ICCAIE), 2011 IEEE International Conference on*, IEEE, pp. 492–496.
[7] Kong NA, Ha DS, Erturk A, et al. (2010) Resistive impedance matching circuit for piezoelectric energy harvesting. *Journal of Intelligent Material Systems and Structures*.
[8] Lallart M, Anton SR and Inman DJ (2010) Frequency self-tuning scheme for broadband vibration energy harvesting. *Journal of Intelligent Material Systems and Structures*.
[9] Shahruz SM (2006b) Limits of performance of mechanical band-pass filters used in energy scavenging. *Journal of sound and vibration*, 293(1), 449–461.
[10] Tang L, Yang Y and Soh CK (2010) Toward broadband vibration-based energy harvesting. *Journal of Intelligent Material Systems and Structures*, 21(18), 1867–1897.
[11] Wu X, Lin J, Kato S, et al. (2008) A frequency adjustable vibration energy harvester. *Proceedings of PowerMEMS*, 245–248.
[12] Xue H, Hu Y and Wang Q-M (2008) Broadband piezoelectric energy harvesting devices using multiple bimorphs with different operating frequencies. *Ultrasonics, Ferroelectrics, and Frequency Control, IEEE Transactions on*, 55(9), 2104–2108.
[13] Zhu D, Tudor MJ and Beeby SP (2010) Strategies for increasing the operating frequency range of vibration energy harvesters: a review. *Measurement Science and Technology*, 21(2), 022001.