International Journal of Engineering & Technology, 7 (3.36) (2018) 40-44

International Journal of Engineering & Technology

Website: www.sciencepubco.com/index.php/IJET

Research paper

A Real-time Schoolchild Shuttle Vehicle Tracking System Base on Android Mobile-apps

Gigih Forda Nama[1], Fadillah Halim Rasyidy[2], Raden Arum S P.[1], Mardiana[1]

[1]Department of Informatics Engineering University of Lampung, Lampung, Indonesia.
[2]Department of Electrical Engineering University of Lampung, Lampung, Indonesia.
**Corresponding author E-mail: gigih@eng.unila.ac.id*

Abstract

Indonesians parent widely use private school shuttle services for their schoolchild due to their lack of time and effectiveness, unfortunately mostly of those shuttle vehicles (car or motor cycle) services currently cannot be tracked. From a security point of view, the parent's need a system that can identified the location of the vehicle in real-time. With rapid technological development today, parents' skepticism can be overcome by tracking the shuttle vehicles through a mobile applications that connected to Global Positioning System (GPS). This research presents the design of a prototype, called "AS-OJEK", an android-based mobile apps and web technology for schoolchild shuttle applications that used several technology such as Web-services, JSON, PHP, MySQL and bootstrap framework as application builders. The application could be installed on any android smartphone version, it will be able to send the location and displaying the vehicle shuttle location on the smartphone screen and display historical location of the tracked vehicle. Rapid Application Development (RAD) framework was used as a software development method, with its 4 phases; phase 1: requirements planning and specifications, phase 2: user design, phase 3: construction, phase 4: cutover. The application was already appropriate with user's needs, proven by performing functional testing and User Acceptance Test (UAT). Based on the results of the UAT, this application has been running well and succeed sending vehicle location to the server, and can tracked through mobile-apps or web applications.

Keywords: *AS-OJEK; RAD; GPS; android smart phone; schoolchild shuttle; vehicle tracking; Web-GIS; GIS*

1. Introduction

Private school shuttle services (car or motorcycle) are widely used by Indonesians parents for their schoolchild due to their lack of time, school distance, and effectiveness, but unfortunately mainly of those shuttle vehicle position couldn't be traced. From a security point of view, parents' need a system that could be identified the location of shuttle vehicles in real-time while driver picking-up their child from and to the school, this is important for the safety of their children. With current rapid development of technology, the parents' security concerns can be solved by implementing tracking vehicles position through GPS-connected applications on their smartphones. It is a necessary to build a schoolchild shuttle vehicle tracking application through a famous android operating system and used its GPS features.

There were so many researchers have been conducted study related to tracking or monitoring vehicle. The most common and famous technology for tracking is the Global Positioning System (GPS). GPS can be used to track, navigate and locate. Nowadays GPS are embedded on any various kinds of smartphones, the others is GSM and RFID technology, paper [1-5] describe the prototype development of vehicle tracking system monitoring by implementing RFID, SMS, and GPS technology, similar work on implementing GPS technology founded on paper [6], Zuki involved GPS receiver and microcontroller to developed

Vehicle Tracking System. Other proof of concept prototype was done by Benjamin et all at work [7], they succeed develop a Real-time Bus Location and Arrival Information System with web application, and tested in UTHM campus-Parit Raja town shuttle bus. The mobile app industry has grown immensely over the last decade, and it is trend likely that it will still continue to do so. Some research already conducted on this field area, research done by Cheng et all [8], shown the condition of various mobile apps development of higher education in Taiwan Country, while work on paper [9-11] described some technology implemented to developing the mobile application, such as PhoneGap, HTML5, Progressive Web Apps, Wearing Device, and others feature. While in Indonesia there are very most popular mobile application called GO-JEK, as motorcycle ride-hailing phone service, they involved into on-demand mobile app cutting-edge, and provide wide services including transportation, logistic, mobile payment, food delivery, and others [12], their service not yet implementing the services on yield area of tracking system of Schoolchildren shuttle services.

In the field of Geographical Information System (GIS) research area, several project already done, those are; Gigih et al on work [13] developed a web based geographic information system for public services in Bandar Lampung City-Indonesia, some other work focused on web-based GIS development founded on paper [14-16]. Especially on paper [16] Reo et all developed the Cloud-based participatory of Web-GIS system in order to facilitate the decision-making process of disaster response during earthquake. Security-related research for securing the application discussed on paper [17][18] they used several open-source application, for developing agile and secure web application.

Some project used Rapid Application Development (RAD) methodology describe on works [19][20], this methodology claimed as more flexible/adaptive for changes request, and for accepting new

Copyright © 2018 Authors. This is an open access article distributed under the Creative Commons Attribution License, which permits unrestricted use, distribution, and reproduction in any medium, provided the original work is properly cited.

inputs like features or functions, at every step of the development process. This research described how RAD framework used to develop the AS-OJEK mobile-apps, will concern to exploring the android smartphone GPS-feature, which aims to overcome the security issue faced by the users.

2. Methodology

An Rapid Application Development (RAD) development method was adopted during deployment of application due to its flexible process, most basic form minimizes planning, reduction in development time, and intensifies prototyping, it has 4 phase that are; Requirements planning phase, User design phase, Construction phase, and Cutover phase

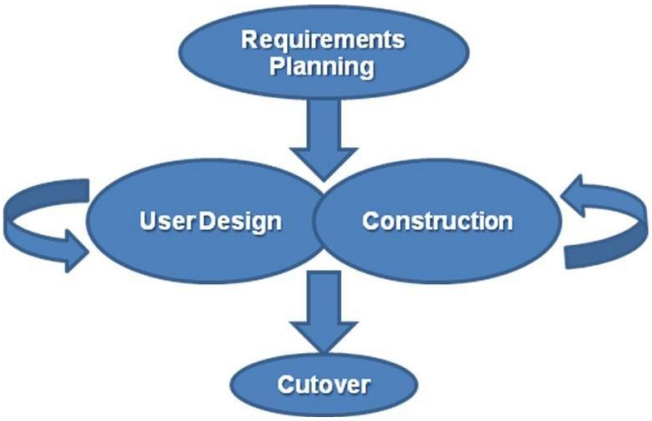

Fig. 1: Phases in the James Martin approach to RAD [21]

Described on figure 1 specified on User Design and Construction Phase, there are several frequent iterations between all stakeholders to make sure application are in-line with user's needs.

3. Result and Discussion

Details implementation process of each RAD method, described as follow;

3.1. Phase 1; Requirements Planning.

On this first RAD stage, there were several activity and process that must be carried out, consist of the combination elements system planning and analysis during the Systems Development Life Cycle (SDLC). In this phase, should be identified who is the software users/client, established and recruit the developers team, defined the project scope, gathering the prominent potential and strategic issue.

1). Users identification; according to preleminary interview results, there were 4 categories of users, those are parent, driver, vehicle owner, and administrator. Each actors/users need a specific feature on mobile application.

2). Hardware needs; there were several hardware needs for software development, i.e server for development, mobile phone that support GPS and already installed android operating system for development, debugging, and functionality test.

3). Feature needs; after collecting information from 4 categories of users, then produced several feature that need to implemented, shown on table 1.

Table 1: Feature Specification identification

Feature Code	Actor	Feature Specification
F1	Parents, Vehicle owner	System able to tracking the position of shuttle vehicle
F2	Vehicle driver	System has an authorization module, and users could send geo-location information to server
F3	Vehicle driver	System has a procedure clear all session and log out system
F4	Vehicle owner	System able to registered their vehicle
F5	Vehicle owner	System allow owner to get summary report of their vehicle position
F6	Administrator	System has all privileges granted to Administrator to manage the system

3.2. Phase 2; User Design

At the second stage of RAD phase, all previous defined users (actors) work closely with the software analysts to finalized system design model that require all system processes structure, all inputs and outputs process. This process well-known as Joint Application Development (JAD), one of RAD framework techniques characteristics, development team was also involved and they used many kind of CASE tools to accelerated develop software model. This process was iterative for several time to getting the best model.

1). Data Modelling; At data modeling activity we conducted several activities that are:

- Identification the information flow of vehicle tracking application, and group them into several object categories.
- Identified all feature and described them on usecase diagram.
- Identified and build the activity diagram of each actors/users to application.
- Develop class diagram form modeling the object

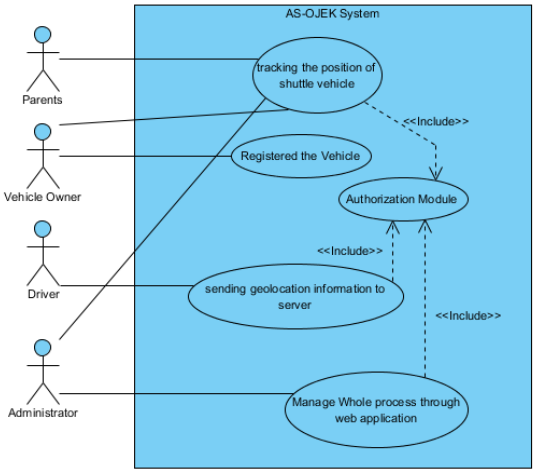

Fig. 2: AS-OJEK Use Case diagram

The use case diagram on figure 2. shown interaction between each actors to AS-OJEK system, overall it was consist of 4 actors those are Administrator, Driver, Vehicle Owner, and Parents that in accordance with feature specification found on first phase.

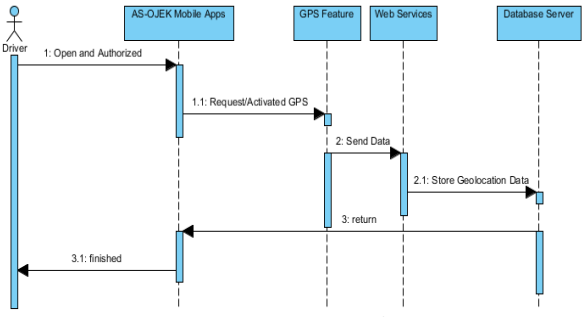

Fig. 3: Sequence diagram of driver

Figure 3 describe the sequence diagram of driver, this actor will interact with several object, such as GPS Services on Mobile Phone, Web services, and also Database Server, and finish until Driver get their data need. When the Driver activated the AS-OJEK mobile-apps then the application directly will access the GPS-feature on android mobile phone, and shall sent the Geo-location information with IMEI address of their mobile phone through the Web-services technology to server-side applications and store the data on-to the Database server.

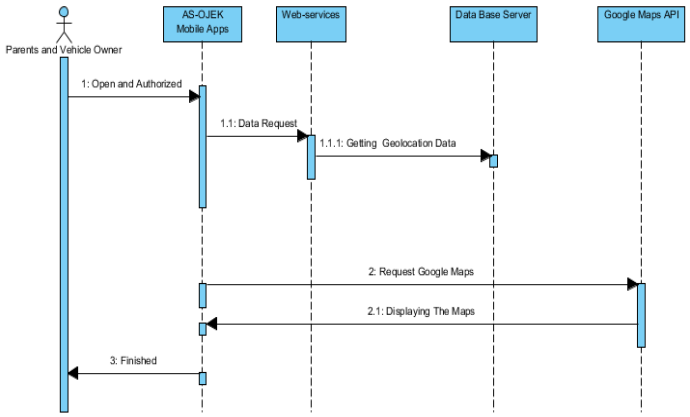

Fig. 4: Sequence diagram of parents and vehicle owners

Figure 4 describe the sequence diagram of parents and vehicle owner, from this figure we can concluded that those actor need to identify the location of shuttle vehicle geo-location position through the AS-OJEK mobile-apps, it is important for parents, who want to know the location of their schoolchild on a real-time condition, while the vehicle owner need to ensure their vehicle are on the right track and avoid the possibility of losing their vehicle, on this sequence diagram drawing each actor will interact with several object, such as web-services, database, and google-map API.

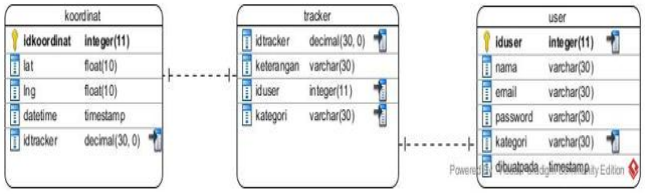

Fig. 5: ERD diagram of each Entity

Figure 5. described the Entity Relationship Diagram (ERD) of AS-OJEK system, on this stage we identified all kind of entity that involved and mapping relationship between each entity, further-more this ERD design will adopted and deploy as Physical Database design on server-side.

2). Application mockups; after finishing the data model, the next step was made a mockups of AS-OJEK, because of RAD method is an iterative process, than a design mockups play a significant role in regards to this methodology, allowing development team create sample designs in a fraction of the time it would take using traditional tools. To save the time and energy, at this stage we used mockup tools and written a concise description of each, after several time discuss with users, and final approved mock-up was describe on Figure 6

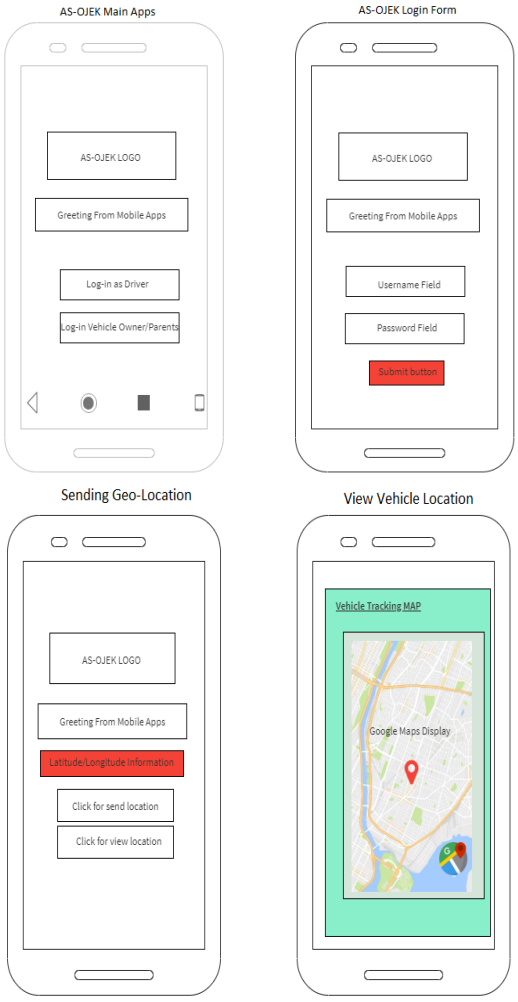

Fig. 6: AS-OJEK *mockups design*

3.3. Phase 3; Construction

This construction phase was the most important phase, ilvolving all team together, and made several iterative process to make sure the application meet with user's need.

1). Android mobile-apps coding; The major process on Construction Phase of mobile development was the UX Design that refers to the term User Experience Design, and the UI Design stands for User Interface Design. Both of these elements are very crucial to this AS-OJEK development, and they work closely each other. The roles between themselves was different, referring to different parts of the process, where UX Design is a more analytical and technical task, while UI Design is closer to graphic design of users need.

The development of AS-OJEK UI used several CASE Tools software, such-as: Android Studio, Java Runtime Environment and Editor, Java Development Kit, RESTFull framework, LAMP software bundled, PHP language program editor, Google Maps API. Google Maps was used as a basic map layer of shuttle vehicle location on Android apps. JSON was used as data format inter-change when sending data and retrieving data from smartphone to server. The International Mobile Equipment Identity Database (IMEI) data, and geo-location tagging (latitude, longitude) produce by GPS services on smartphone shall recorded to database server.

```
/**
 * Method menampilkan lokasi ke on UI dan mengirimkan ke web service
 */
private void displayLocation() {
    telephonyManager = (TelephonyManager) this.getSystemService(Context.TELEPHONY_SERVICE);
    mLastLocation = LocationServices.FusedLocationApi
            .getLastLocation(mGoogleApiClient);
    imei = telephonyManager.getDeviceId();
    if (mLastLocation != null) {
        double latitude = mLastLocation.getLatitude();
        double longitude = mLastLocation.getLongitude();
        lblLocation.setText(latitude + ", " + longitude + "," + imei);

        HttpClient httpclient = new DefaultHttpClient();
        HttpGet htget = new HttpGet("http://uirg.unila.ac.id/xxx/koordinat.php?lat=" + latit

        try {
            // Execute HTTP Post Request
            HttpResponse response = httpclient.execute(htget);
            String resp = response.getStatusLine().toString();
        } catch (ClientProtocolException e) {
```

Fig. 7: Mobile-apps source code, section sending GPS location from Android Phone to Server

Figure 7 described the source code section of sending GPS location (tracking.java) from android smartphone to application server using Web-services, 4 items of attribute sent to the server those are; latitude, longitude, id-tracker, and IMEI number of mobile phone.

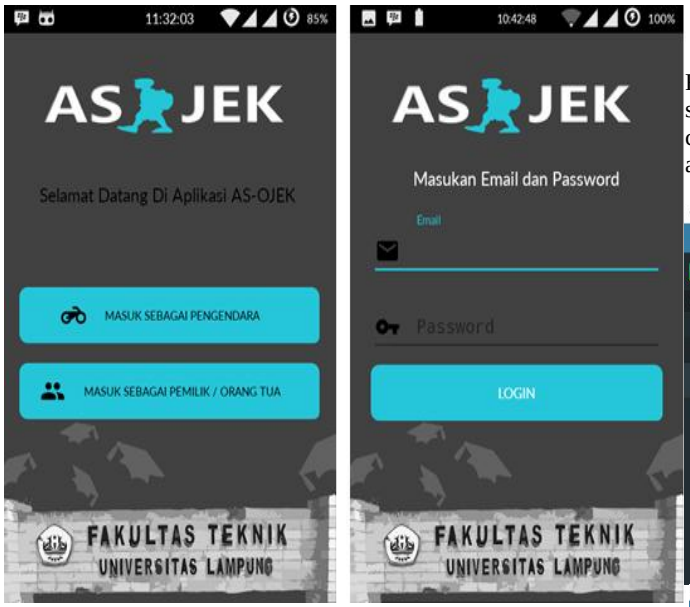

Fig. 8 (a): AS-OJEK Android Mobile-apps

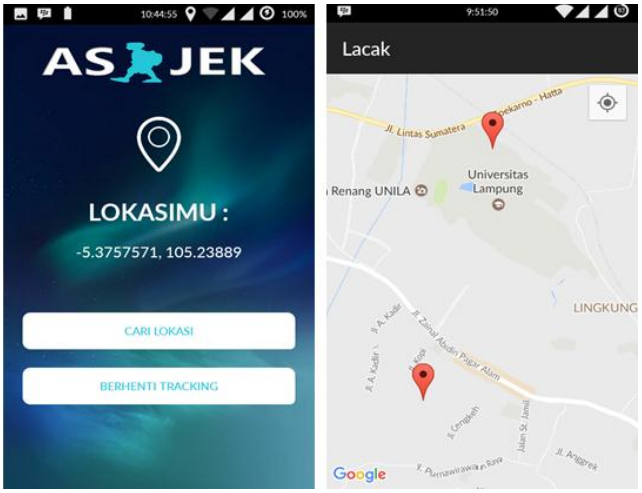

Fig. 8 (b): AS-OJEK Android Mobile-apps

Figure 8 (a,b) shown AS-OJEK android mobile-apps login form screen-capture, and tracking GPS data activity of vehicle movement.

2). Web-server coding; at this stage, implemented synchronous communication between mobile-apps and server side, based on service oriented architecture (SOA), which used the RESTful API services framework and Java Script Object Notation (JSON) Standard for data inter-change, addresses with a specific URL format. The android mobile client can interact with a resource via representations, by using standard HTTP operations (POST /GET/PULL/DELETE/etc).

```
public function registerUser($nama, $email, $password, $kategori) {

    $db = $this -> db;
    if (!empty($nama) && !empty($email) && !empty($password)) {
        if ($db -> checkUserExist($email)) {
            $response["result"] = "failure";
            $response["message"] = "Pengguna Sudah Terdafar!";
            return json_encode($response);
        } else {
            $result = $db -> insertData($nama, $email, $password, $kategori);
            if ($result) {
                $response["result"] = "success";
                $response["message"] = "Berhasil Sudah Terdaftar!";
                return json_encode($response);
            } else {
                $response["result"] = "failure";
                $response["message"] = "Daftar Gagal";
                return json_encode($response);
            }
        }
    } else {
        return $this -> getMsgParamNotEmpty();
    }
}
```

Fig. 9: RESTful API Service On Server Side

Figure 9 shown the section code of create RESTful API on server side, with specific URI to handle user registration, the communication between AS-OJEK apps on mobile phone and server side are on synchronous mode and in real-time.

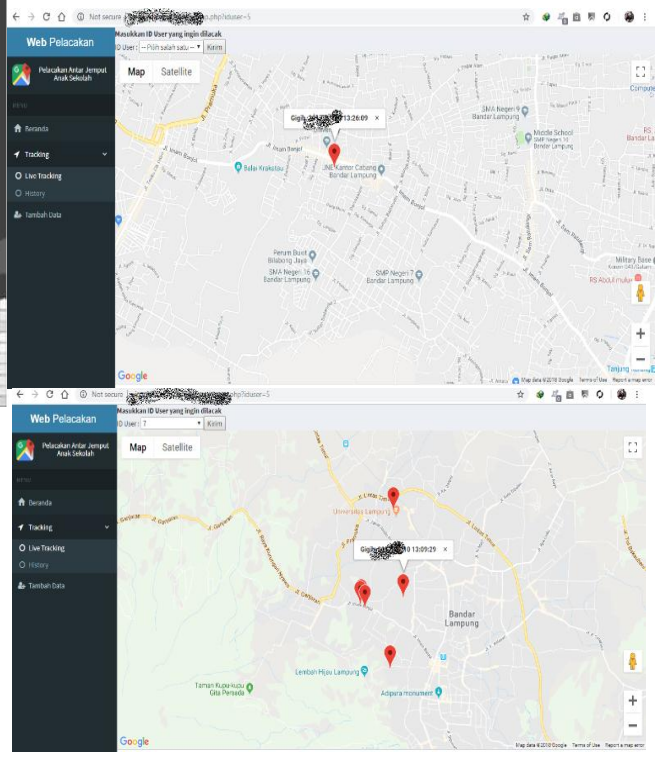

Fig. 10: AS-OJEK On-line Dashboard Management

Figure 10 shown the screen capture of AS-OJEK web management interface, used by Administrator to manage the user account, and getting geo-location information of any shuttle vehicle on real-time condition or find-out the historical movement of all vehicle. Several iteration have been made on this section, to make sure the application already meet with users' needs.

3.4. Phase 4; Cutover

Some important activity at the final cutover stage are; development team implementing a final functionality test, running all AS-OJEK component on-to live production environtment, made Users Acceptance Test model, and doing some iteration if

any bug founded. Some mobile phone with various type of android operating system was used for testing the AS-OJEK mobile-apps, the result shown that application can run smoothly with no error.

Table 2: UAT Questioner of AS-OJEK service performance

No	Question
1.	Is the appearance of the application interesting?
2.	Are you comfortable with the data presentation model?
3.	Does the information shown look clear enough?
4.	How about the accuracy of the application in displaying location information?
5.	What do you think about the information features displayed on the application?
6.	What do you think about this whole application?

The result of UAT questionare conclude that the development and design of AS-OJEK mobile applications it can be declared successful, because it has fulfilled with user needs, and in accordance with the RAD method.

4. Conclusion

This paper presents the design and development process of a mobile-apps system called AS-OJEK. This prototype application let the shuttle vehicle could be track on a real-time, the parent also could monitoring the position of their schoolchild through the mobile application, vehicle owner could directly find-out the location of their vehicle. GPS, GIS, Mobile and Web technology was involved at development phase, RAD was used because this methodology designed more flexible to changes and for accept new inputs, like features and functions, at every step of the development process.

References

[1] L. Sindhuja, M. Naresh, M. N. Yadav, "School Children Identification and Transport Tracking using RFID," International Journal and Magazine of Engineering, Technology, Management and Research, vol. 3, pp. 1-6, 2016.

[2] S. Shah and B. Singh, "RFID based school bus tracking and security system," International Conference on Communication and Signal Processing (ICCSP), pp. 1481-1485, 2016.

[3] K. S. Kalid, N. Rosli, "The Design of a Schoolchildren Identification and Transportation Tracking System", International Conference on Research and Innovation in Information Systems (ICRIIS), 2017.

[4] M. Z. Juhari, and H. Mansor, "IIUM Bus On Campus Monitoring System", International Conference on Computer and Communication Engineering (ICCCE), 2016.

[5] Kamaraj, K. Radha, "Intelligent Transport System Using Integrated GPS Optimized Reader", Second International Conference on Science Technology Engineering and Management (ICONSTEM), 2016.

[6] M. Zuki, "GSM/GPS vehicle tracking system Gtrack", M.S Thesis Information Technology Faculty of Computer Science, Universiti Teknologi MARA, Shah Alam, Malaysia, pp. 27-35, 2004.

[7] Benjamin, S. H. Dahlan, M. H. Wahab, "Real-time Bus Location and Arrival Information System", IEEE Conference on Wireless Sensors (ICWiSE), 2016.

[8] H. Cheng, T. Kung, C. Li, Y. Sun, "The current state of mobile apps development of higher education in Taiwan" 19th International Conference on Advanced Communication Technology (ICACT), 2017.

[9] W. Fan, J. Yang, "Design and implementation of cross-platform friends-positioning mobile App based on Phonegap and HTML5", 2nd IEEE International Conference on Computational Intelligence and Applications (ICCIA), 2017.

[10] D. Fortunato, J. Bernardino, "Progressive web apps: An alternative to the native mobile Apps", 13th Iberian Conference on Information Systems and Technologies (CISTI), 2018.

[11] K. C. Brata, A. Pinandito, M. T. Ananta, N. D. Priandani, "Design of public transportation navigation system on android wear device", International Conference on Sustainable Information Engineering and Technology (SIET), 2017.

[12] GO-JEK Official site, 2018, https://www.go-jek.com/

[13] G. F. Nama, M. Ulvan, A. Ulvan, A. M. Hanafi, "Design and implementation web based geographic information system for public services in Bandar Lampung City — Indonesia", International Conference on Science in Information Technology (ICSITech), 2015.

[14] Z. Chen, N. Chen, J. Gong, "Design and implementation of the real-time GIS data model and Sensor Web service platform for environmental big data management with the Apache Storm", Fourth International Conference on Agro-Geoinformatics (Agro-geoinformatics), 2015.

[15] T. Ali, R. A. Saeed, S. O. Fageeri, "Web-based GIS Business Hotels Tourism Sites in Khartoum, Sudan", International Conference on Communication, Control, Computing and Electronics Engineering (ICCCCEE), 2017.

[16] R. Kimura, M. Inoguchi, K. Tamura, Y.Nawa, H. Hayashi, "Implementation of a web-based and cloud-based participatory GIS system to certify property damage due to Tsunami", International Conference on Information Society (i-Society 2012), 2012.

[17] G. F. Nama, K. Muludi, "Implementation of Two-Factor Authentication (2FA) to Enhance the Security of Academic Information System", Journal of Engineering and Applied Sciences, Volume: 13, Issue: 8, Page No. 2209-2220, 2018.

[18] G. F. Nama, G. I. Suhada, A. Zaenudin, "Smart System Monitoring of Gradient Soil Temperature at the Anak Krakatoa Volcano", Asian Journal of Information Technology, Volume: 16, Issue: 2, Page No.: 337-347, 2017.

[19] N. Daud, N. Bakar, H. Rusli, "Implementing Rapid Application Development (RAD) Methodology in Developing Practical Training Application System", International Symposium on Information Technology, 2010.

[20] Ismail, S. A. Kadir, A. Aziz, M. Mokshin, A. Lokman, "iTourism Travel Buddy Mobile Application", 10th International Conference on Next Generation Mobile Applications, Security and Technologies (NGMAST), 2016.

[21] J, Martin, "Rapid application development," Macmillan Publishing Co, Inc, 1991.