International Journal of Engineering & Technology, 4 (2) (2015) 342-349
www.sciencepubco.com/index.php/IJET
©Science Publishing Corporation
doi: 10.14419/ijet.v4i2.2854
Research Paper

Design of a hierarchical fuzzy model predictive controller

Zeinab Fallah [1]*, Mojtaba Ahmadieh Khanesar [2], Mohammad Teshnehlab [3]

[1] *Department of Control Engineering Islamic Azad University, South Tehran Branch, Tehran, Iran*
[2] *Faculty of Electrical and Computer Engineering, Semnan University, Semnan, Iran*
[3] *Department of Control Engineering, K. N. Toosi University of Tech. Tehran, Iran*
**Corresponding author E-mail: zeinab_fallah89@yahoo.com*

Copyright © 2015 Zeinab Fallah et al. This is an open access article distributed under the Creative Commons Attribution License, which permits unrestricted use, distribution, and reproduction in any medium, provided the original work is properly cited.

Abstract

In order to control a nonlinear system using Nonlinear Model Predictive Control (NMPC), a nonlinear model from system is required. In this paper, a hierarchical neuro-fuzzy model is used for nonlinear identification of the plant. The use of hierarchical neuro-fuzzy systems makes it possible to overcome the curse of dimensionality. In neuro-fuzzy systems, if the input number increases, then the number of rules increases exponentially. One solution to this problem is making use of Hierarchical Fuzzy System Mamdani (HFS) in which the number of the rules increases linearly. Gradient descent and recursive least square algorithm are used simultaneously to train the parameters of the HFS. Gradient Descent Algorithm is utilized to train the parameters, which appear nonlinearly in the output of HFS, and RLS is used to train the parameters of consequent the part, which appears linearly in the output of HFS. Finally, a model predictive fuzzy controller based on a predictive cost function is proposed. Using Gradient Descent Algorithm, the parameters of the controller are optimized. The proposed controller is simulated on the control of continuous stirred tank reactor. It is shown that the proposed method can control the system with high performance.

Keywords: *Control; Neuro-Fuzzy Network; Hierarchical Fuzzy System; Gradient Descent; Recursive Least Square; Continuous Stirred Tank Reactor.*

1. Introduction

Model Predictive Control (MPC) is a model–based control method, in which the process output is predicted in a clear time interval. This dynamic model has a key role in the design of predictive controllers. Within each sampling time, the MPC algorithm by calculation of suitable control signal attempts to optimize process future behavior. The obtained experiences from industrial projects show that identification and modeling are the most difficult and time-consuming parts in predictive control design. Thus, the first and most important factor in predictive control is to obtain the process explicit model, which describes all the important characteristics of the process. This model allows the controller to deal with the dynamics of the system. This algorithm describes the system's behavior during a future horizon. Consequently, the effect of feedback and forward disturbances could be predicted and eliminated, and hence, then process output approaches the reference trajectory. The characteristics of this method include having the ability to consider bounds during controller design, simple setting of parameters, and generalizability to multi-variable systems. In addition, predictive control will be applicable in a wide group of processes such as delayed systems, non-minimum phase and unstable systems. Predictive control because of having many advantages could be used in industry; however, its most important shortcoming is that this method requires a very precise and suitable and accurate system model. There are different predictive control algorithms, which their differences lay in process modeling and optimization of cost function. If the process modeling is based on linear method, it is called linear predictive control; also, if process modeling is based on non-linear method, it is called non-linear predictive control. Linear predictive control can be used only when there is just an operating point, or when the aim of the controller design is to eliminate small disturbances. Some of the most common linear predictive controllers have been considered in [1]. However, if intense non-linearity exists in the process, linear predictive method might not yield good results. In such cases, it seems necessary to use non-linear model in controller structure. Different non-linear models have been used in non-linear predictive controller

papers, which are summarized in [2]. The strategy in design of nonlinear controllers is quite similar to those of linear ones, except that non-linear dynamic models are used in prediction and optimization in nonlinear cases.
Fuzzy logic enables us to process data and knowledge originating from uncertain environments. Uncertainty usually originates from different types of sources or the data capturing method. A typical example of a system that uses uncertain data is the human being who processes and conveys all data in a linguistic or descriptional form rather than mathematically exact form. Fuzzy logic is used for many applications such as approximation [3-4], control systems [5-6], fuzzy classification [7], and fuzzy clustering [8]. In order to describe the nature and inherent phenomenon of complicated systems, fuzzy logic is used to model unknown dynamic systems [9-10]. In fuzzy logic, the validity of any statement is an issue of a specific degree, and is quantified using a Membership Function (MF). It is difficult, when the high-dimensional data are employed in the modeling process. For example, if a fuzzy system has n input variables and each input variable has m membership functions, the fuzzy system has m^n fuzzy rules, and this will result in the difficulties of computation complexity, which is called the curse of dimensionality. The problem of "curse of dimension" is defined by two aspects. First, the system's fuzzy rules increase exponentially with the input variables; second, the system's parameters to be designed will also increase exponentially with the input variables. To tackle this difficulty, Raju proposed the term Hierarchical Fuzzy Systems (HFS) [11]. HFSs are very useful for overcoming the curse of dimensionality, and make the rule base easier to understand and interpret. Due to these advantages, HFSs have been used in system modeling, control systems, pattern classification, and financial forecasting.
Learning capability is one of the most important properties of fuzzy systems. There are different kinds of learning algorithm. In this paper, Gradient Descent (GD) and recursive least square methods are considered. GD is a local nonlinear optimization technique and is employed to find optimal linear and nonlinear parameters. Another training algorithm is Recursive Least Square (RLS), which is a linear learning algorithm, and is employed for learning linear parameters. It is also an online learning algorithm. It is proved that the RLS training method for the case when the parameters appear linear is the best linear unbiased estimator (BLUE). The RLS method requires constant computation time for each parameter update, and therefore, it is perfectly suited for online use in real-time applications.
In this paper, at first, we have identified Continuous Stirred Tank Reactors (CSTR) system using the HFS method to distinguish the HFS predictive model, and then by using hierarchical Mamdani fuzzy system, we attempted to implement predictive controller on CSTR system. Moreover, we employed the gradient descent-training algorithm for optimizing cost function in non-linear model based predictive control. In fact, this paper is the standard method set forth in paper [12] of the predictive model.

2. CSTR system

Here, we consider CSTR, which has many applications in chemical processes, and is considered a nonlinear process. The process model consisted of two nonlinear ordinary differential equations as follows:

$$\dot{C}_A(t) = \frac{q}{v}(C_{A0} - C_A(t)) - k_0 C_A(t) e^{\frac{-E}{RT(t)}} \quad (1)$$

$$\dot{T}(t) = \frac{q}{v}(T_0 - T(t)) - \frac{k_0 \Delta H}{\rho C_p} C_A(t) e^{\frac{-E}{RT(t)}} + \frac{\rho_c C_{pc}}{\rho C_p v} q_c(t) \left(1 - e^{\frac{-hA}{q_c(t)\rho_c C_{pc}}}\right)(T_{c0} - T(t)) \quad (2)$$

The objective is to control the concentration of C_A by manipulating the coolant flow rate q_c, which is Coolant flow rate $q_c(t)$, reactor temperature $T(t)$, is input current concentration $C_A(t)$. The designed models' parameters and their normal values are given in Table 1 [13]:

Table 1: The CSTR Parameters.

Quantity	Parameter	Nominal Value
Measured product concentration	C_A	$0.1 mol/l$
Reactor temperature	T	438.54k
Coolant flow rate	q_c	103.41l/min
Process flow rate	Q	100l/min
Feed concentration	C_{A0}	1mol/l
Feed temperature	T_0	350k
Inlet coolant temperature	T_{c0}	350k
CSTR volume	V	100l
Heat transfer term	hA	$7 \times 10^5 cal/min/k$
Reaction rate constant	k_0	$7.2 \times 10^{10} l/min$
Activation energy term	E/R	$1 \times 10^4 k$
Heat of reaction	ΔH	$-2 \times 10^5 cal/mol$
Linquid densities	ρ, ρ_c	$1 \times 10^3 g/l$
Specific heats	C_p, C_{pc}	$1 \times cal/g/k$

3. Structure of the hierarchical fuzzy system (HFS)

Different types of HFS structures are shown in [14-15]. The structure used in this paper is shown in Fig. 1.

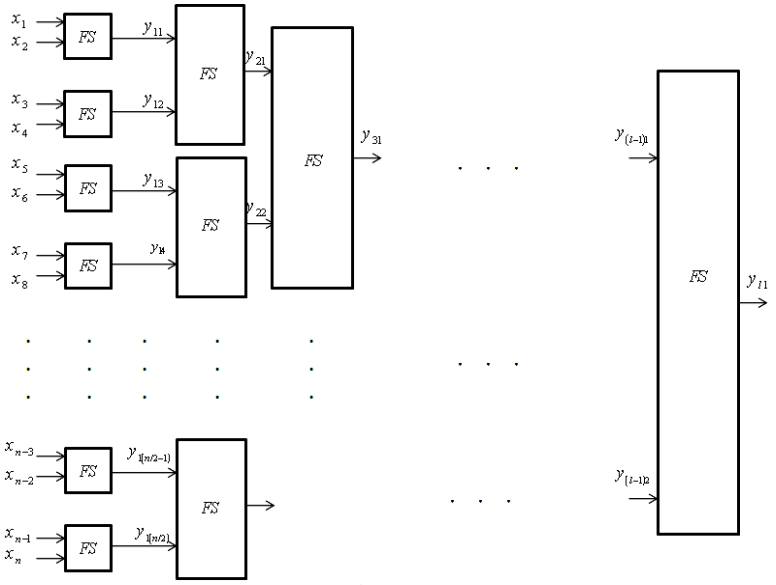

Fig. 1: Structure of the Hierarchical System

This structure is composed of several fuzzy systems, which are connected to each other as shown in Fig. 1. Here $X = (x_1, \dots, x_n)$ is input variable and $y_{k1}, y_{k2}, \dots, y_{(n/2^k)}$ are FLU outputs in k^{th} layer; y_{L1} is also HFS output. There are different kinds of models for identification of nonlinear dynamic system, which NOE (Non-Linear Output Error) model is considered to be identified hierarchically.

$$\hat{C}_A(k+1) = f\left(\hat{C}_A(k), \hat{C}_A(k-1), \hat{C}_A(k-2), q_c(k-1)\right) \tag{3}$$

4. Predictive control using hierarchical mamdani fuzzy system

Hierarchical fuzzy systems are utilized to tackle curse of dimensionality problem in identification and modeling of non-linear systems by combining with hierarchical structures. With regard to training of hierarchical fuzzy systems, by using input and output data, they could easily be applied for implementation of online control methods.

Predictive control using fuzzy system is a type of non-linear model based predictive control. It is a kind of controller that is a concrete method for optimization, and the non-linear dynamic model is used for predicting process outputs. The method of producing optimized control signals is similar to the linear state. In each sampling time, the parameters of the model based on new measurements are updated, and then optimized controller variables through predictive horizon are calculated according to standard function and accomplished in the next stage (Fig. 2).

This method usually consists of five parts:

1) A system, which should be controlled;
2) A desirable performance that should be obtained by the system;
3) The system's model that is expressed using a hierarchical fuzzy system;
4) An optimization algorithm consisting of feature error signals and the control signal, and
5) Two blocks of fuzzy system (one hierarchical fuzzy system) for producing the control signal changes and defining a suitable control signal, which should be exerted in the system to reach its desirable performance, and should define the inputs of first fuzzy system consisting of error changes between reference signal and predicted output. In addition, inputs of the second fuzzy system included output of the first fuzzy system and the reference signal.

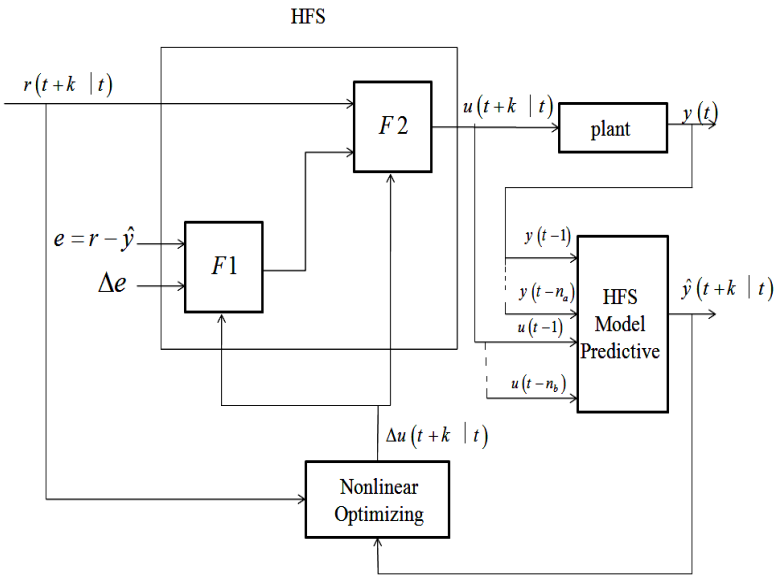

Fig. 2: Predictive Control Using Hierarchical Fuzzy System

5. Predictive cost function and its optimization

The optimization problem in predictive control in which a non-linear model has been used for modeling is a non-convex optimization problem. Since the cost function is dependent on future outputs, hierarchical fuzzy system is used to calculate the relationship between the non-linear cost function and the control signal. Non-linear MPC algorithm needs the solution to a nonlinear problem in order to produce the control signal in each time step. Hence, the optimization problem is complicated. There are different methods for solving non-convex non-linear optimization problems, among them methods like successive linearization of model equations, simultaneous model solution and optimization, and gradient-based optimization. All gradient-based methods are based on changing the parameters vector in a corresponding trajectory of gradients. There are different gradient-based methods for solving non-linear optimizing problems in predictive control. Newton-Rafson algorithm [16] is utilized for optimization. Gil et al. [17] used gradient descent. Levenberge-Marquardt algorithm has been used in [18]. Leskens et al. [19] applied sequential quadratic programming. In this paper, we have also used the gradient descent algorithm.

In this paper, the CSTR system has been applied. Hierarchical fuzzy systems are used in difference operating points for non-linear modeling, and effective input dynamics are considered as the inputs of the fuzzy system.

If the input dynamics are chosen in the form of $\left[\hat{C}_A(k), \hat{C}_A(k-1), \hat{C}_A(k-2), q_c(k-1)\right]$ for the CSTR system, the number of inputs of the fuzzy system will be four, and the hierarchical fuzzy system will have a structure as show in Fig. 3. As it can be seen, this structure is consisted of three fuzzy systems, each of which have outputs namely y_{11}, y_{12}, y_{21}, and the final output of hierarchical fuzzy system is y_{21}.

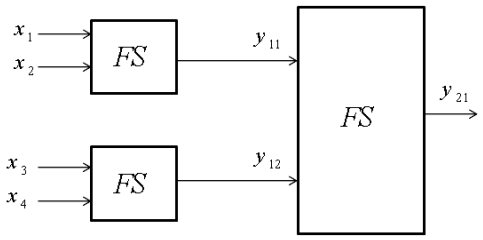

Fig. 3: The Hierarchical Fuzzy System Structure

Here, the cost function is considered as follows. Assuming $\hat{y} = y_{21}$, we have:

$$J(t) = \sum_{k=N_1}^{N_2}[\hat{y}(t+k) - r(t+k)]^2 + \sum_{k=0}^{N_u-1}\lambda_k[\Delta u(t+k)]^2 \quad (1)$$

where, J is the cost function, t is time , N_1 ... N_2 are output predictive horizon, N_1 is control horizon, y is system's output, r is reference value, u is control signal, Δ is difference operator, and λ_k is coefficient of control signal term.

Cost function optimization is conducted in each sampling time. After optimization, the control signal is obtained in the form of $[u(t), u(t+1), \ldots, u(t+N_u)]$, which only the first part of this signal is used as a real control in the system. Since J is dependent on the control signal, a repetitive method can be applied for determining the best-input value? For the ith repetitive step in tth time, the gradient descent algorithm can be calculated as follows:

$$\Delta u^i(t) = -\alpha \frac{\partial J(t)}{\partial u^i(t)} \tag{2}$$

$\alpha \in R^T$ is training rate

This repetitive algorithm will continue to the point that $u(t)$ input change is less than the small value of ε. The derivative of cost function (J) in the time of $t + h(h = 1,2, \dots, \mathrm{N_u})$ is written as follows:

$$\frac{\partial \mathrm{J(t+h)}}{\partial \mathrm{u(t+h)}} = -\sum_{\mathrm{k=N_1}}^{\mathrm{N_2}} [\hat{\mathrm{y}}(\mathrm{t+k}) - \mathrm{r(t+k)}] \frac{\partial \hat{\mathrm{y}}(\mathrm{t+k})}{\partial \mathrm{u(t+h)}} + \sum_{\mathrm{k=0}}^{\mathrm{N_u}-1} \lambda_{\mathrm{k}} [\Delta \mathrm{u(t+k)}] \frac{\partial \Delta \mathrm{u(t+k)}}{\partial \mathrm{u(t+h)}} \tag{3}$$

Part $\frac{\partial \Delta \mathrm{u(t+k)}}{\partial \mathrm{u(t+h)}}$ can be written as δ Kroncker function:

$$\frac{\partial \mathrm{u(t+k)}}{\partial \mathrm{u(t+h)}} - \frac{\partial \mathrm{u(t+k-1)}}{\partial \mathrm{u(t+h)}} = \delta(\mathrm{h,k}) - \delta(\mathrm{h,k-1}) \tag{4}$$

Where, δ kroncker function defined as following:

$$\delta(\mathrm{h,k}) = \begin{cases} 1 & \text{if h} = \mathrm{k} \\ 0 & \text{if h} \neq \mathrm{k} \end{cases} \tag{5}$$

Similarly, we have:

$$\frac{\partial \mathrm{u(t+k)}}{\partial \mathrm{u(t+h)}} = \delta(\mathrm{h,k}) \tag{6}$$

Then, $\frac{\partial \hat{\mathrm{y}}(\mathrm{t+k})}{\partial \mathrm{u(t+h)}}$ can be written as follows:

$$\frac{\partial \hat{\mathrm{y}}(\mathrm{t+k})}{\partial \mathrm{u(t+h)}} = \frac{\partial \hat{\mathrm{y}}(\mathrm{t+k})}{\partial \mathrm{y_{12}(t+k)}} \times \frac{\partial \mathrm{y_{12}(t+k)}}{\partial \mathrm{u(t+h)}} \tag{7}$$

Where Eq. (7) is a hierarchical fuzzy system's jacobian.

6. Simulation results

6.1. Identification

In this paper, CSTR system has been identified by hierarchical mamdani fuzzy system method using gradient descent combining algorithm along with Recursive Least Square (RLS). Among 7500 produced samples, 5000 samples were chosen for data training, and 2500 samples for data validation. Input and output signals for identification, are shown in Fig. 4.

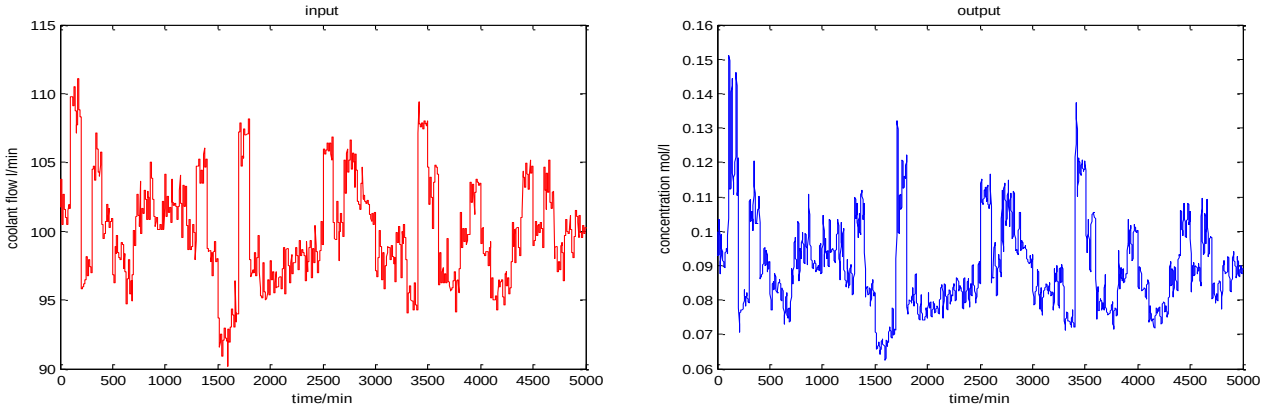

Fig. 4: Input and Output Signals for CSTR System.

The output is in the form of. $\hat{\mathrm{C}}_{\mathrm{A}}(\mathrm{k+1}) = \mathrm{f}\left(\hat{\mathrm{C}}_{\mathrm{A}}(\mathrm{k}), \hat{\mathrm{C}}_{\mathrm{A}}(\mathrm{k-1}), \hat{\mathrm{C}}_{\mathrm{A}}(\mathrm{k-2}), \mathrm{q_c(k-1)}\right)$. As can be seen, the identification model is a NOE model. With regard to the effective input dynamics, the hierarchical fuzzy system's input is four and for every input, three membership functions are defined and shown in Fig. 5.

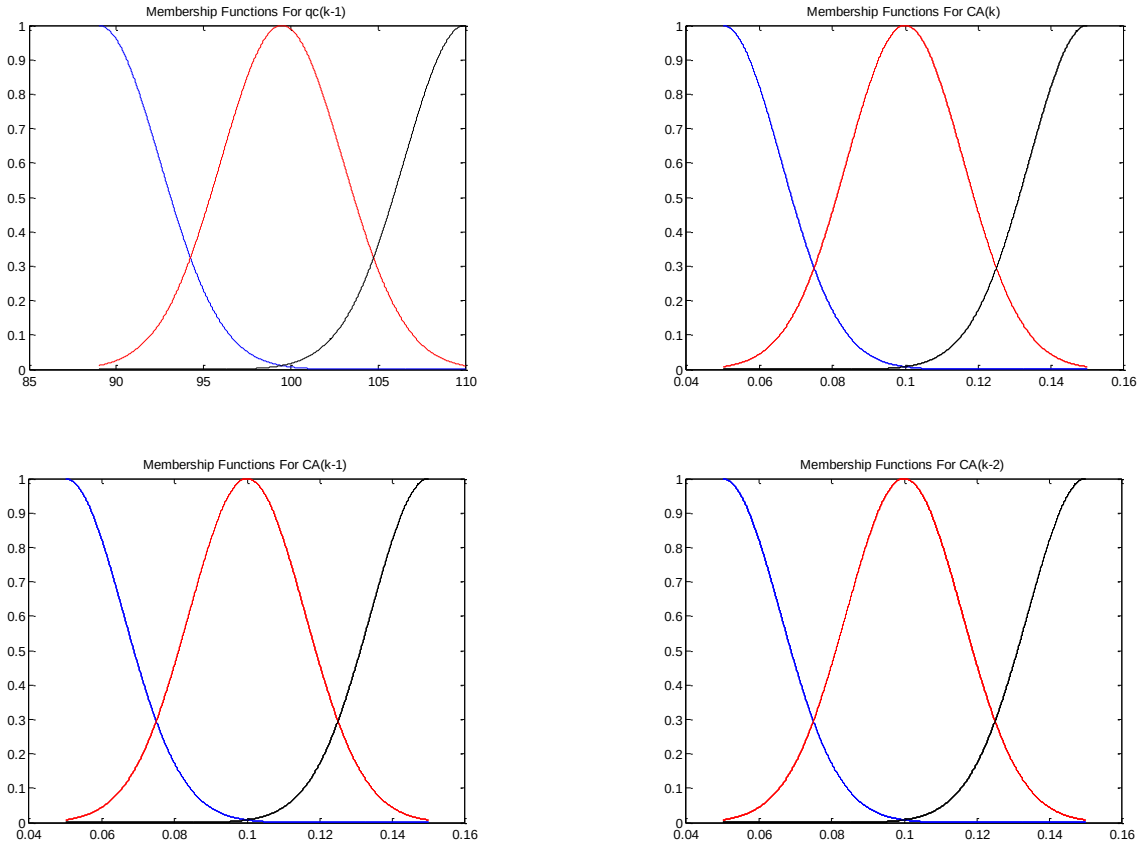

Fig. 5: Membership Function Of The Fuzzy Model

Simulation results for identifying the CSTR system are shown in Fig .6 by using HFS method and through training with gradient descent combining algorithm Recursive Least Square (RLS).

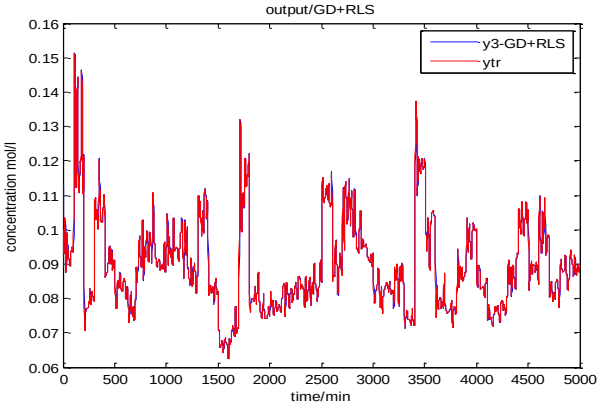

Fig. 6: Identification

6.2. Predictive control

In this section, in order to test the predictive controller algorithm introduced in part 4, the predictive controller was implemented in MATLAB software, and simulations were conducted on the CSTR system.

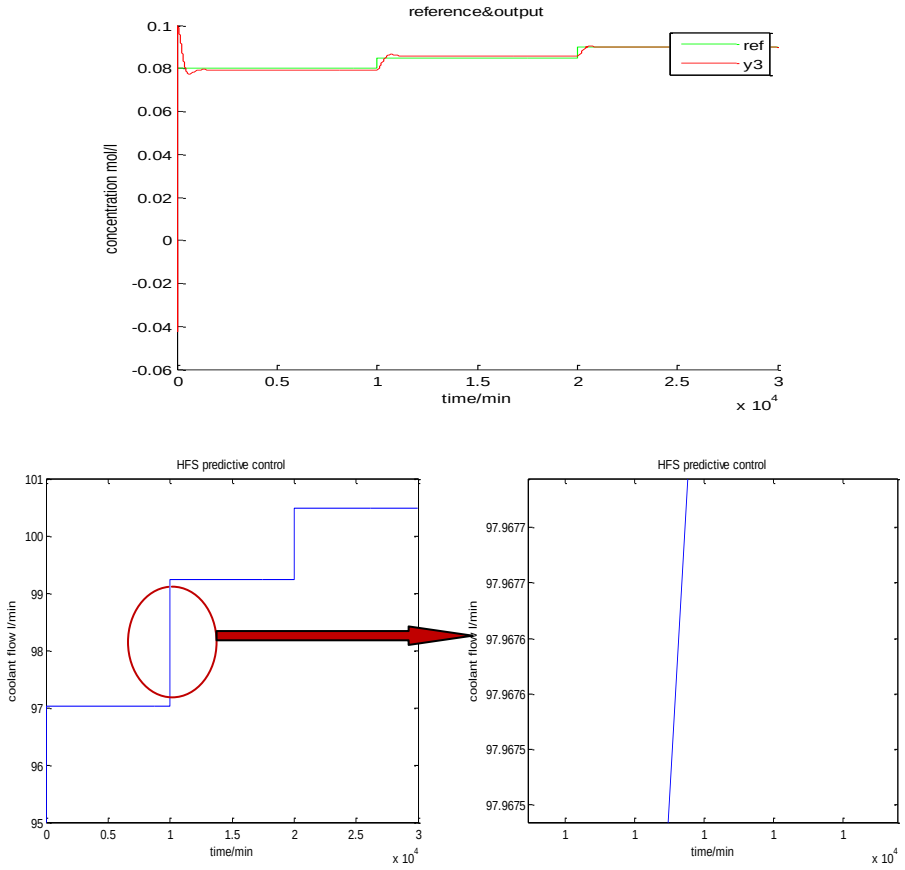

Fig. 7: HFS Model-Based Predictive Control Simulation on CSTR System

Simulation on the CSTR model is shown in Fig. 7, which Fig. 1 presents reference signal and systems output, and Fig. 2 shows the control signal. The most and the least predictive horizons and controller are chosen as 1, 5, and 3, respectively. Control signal term interest is assumed $\lambda = 0.01$. As it can be seen, tracking is done very well. The control signal does not have many fluctuations, and the control signal's slop is placed within allowed limit.

7. Conclusion

In this paper, we designed a non-linear predictive control using hierarchical mamdani fuzzy systems. It is worth noting that a nonlinear predictive control shoud be applied if the system is to be intensively non-linear with higher interferences with more delays and input-output bounds. Fuzzy systems due to universal approximation property could be applied for covering system's behavior in a wide effective interval. Since fuzzy systems deal with the curse of dimensionality problem by increasing input, in this study, we attempted to use hierarchical fuzzy systems methods along with GD+RLS combination training algorithm for system identification. This method is continuously carried out to the point where the dimensionality problem is resolved; and the gradient descent based method is used for optimizing the cost function.

References

[1] E. F. Camacho and C. Bordons, "Model predictive control", 2nd Edition, Springer, 2005.

[2] F. Allgower and A. Z. Zheng, "Nonlinear model predictive control: Assessment and future directions for research", Birkhäuser Basel, Germany, 2000. http://dx.doi.org/10.1007/978-3-0348-8407-5.

[3] Zhang, T., G. Feng, and X.-J. Zeng, "Output tracking of constrained nonlinear processes with oset-free input-to-state stable fuzzy predictive control", Automatica 45 (4): 900–909. 2009. http://dx.doi.org/10.1016/j.automatica.2008.11.016.

[4] Lendek, Z., R. Babuska, and B. De Schutter, "Stability of cascaded fuzzy systems and observers", IEEE Transactions on Fuzzy Systems 17 (3): 641–653. 2009. http://dx.doi.org/10.1109/TFUZZ.2008.924353.

[5] Khanesar, Mojtaba Ahmadieh, Mohammad Teshnehlab, and Okyay Kaynak, "Control and synchronization of chaotic systems using a novel indirect model reference fuzzy controller", Soft Computing 16 (7): 1253-1265, 2012. http://dx.doi.org/10.1007/s00500-012-0810-z.

[6] Cheong, F. and R. Lai, "Designing a hierarchical fuzzy logic controller using the differential evolution approach", Applied Soft Computing 7 (2): 481–491. 2007. http://dx.doi.org/10.1016/j.asoc.2006.12.001.

[7] Jahromi, M. Z. and M. Taheri, "A proposed method for learning rule weights in fuzzy rule-based classification systems", Fuzzy Sets and Systems 159 (4): 449–459. 2008. http://dx.doi.org/10.1016/j.fss.2007.08.007.

[8] Lee, M. and W. Pedrycz, "Adaptive learning of ordinal-numerical mappings through fuzzy clustering for the objects of mixed features", Fuzzy Sets and Systems 161 (4): 564–577. 2010. http://dx.doi.org/10.1016/j.fss.2009.05.011.

[9] Zeng XJ, Keane JA, "Approximation capabilities of hierarchical fuzzy systems", IEEE Trans Fuzzy Syst 13(5):659–672. 2005. http://dx.doi.org/10.1109/TFUZZ.2005.856559.
[10] Khanesar, M. A., M. A. Shoorehdeli, and M. Teshnehlab, "Hybrid training of recurrent fuzzy neural network model", In Mechatronics and Automation, 2007. ICMA 2007. International Conference on, pp. 2598-2603, 2007.
[11] Raju, G.V.S., Zhou, J., Kisner R.A, "Hierarchical Fuzzy Control", International Journal of Control 54(1991)1201-1216. 1991.
[12] Fallah, Z., Khanesar, M.A., Teshnehlab, M., "Hierarchical fuzzy identification using gradient descent and recursive least square method", computer, control & communication (ic4), 2013 3rd international conference on, 25-26 sept. 2013.
[13] Espinosa, Jairo J., and Joos Vandewalle, " Predictive control using fuzzy models", In Advances in Soft Computing, pp. 187-200, 1999.
[14] Y. Chen, J. Dong, and B. Yang, " Automatic design of hierarchical TS-FS model using ant programming and pso algorithm", Proceedings 12th International Conference on Artificial Intelligence, Methodology, Systems and Applications, Lecture Notes on Artificial Inteligence, LNAI 3192, pages 285–294.2004.
[15] Xiangyan Zhang and Naiyao Zhang, "Universal Approximation of Binary-Tree Hierarchical Fuzzy Systems with Typical FLUs", Springer-Verlag Berlin Heidelberg. 2006.
[16] D. Soloway and P. J Haley, "Neural Generalized Predictive Control; A Newton Raphson Implementation", Proceeding of IEEE International Symposium on Intelligent Control, PP.2777-282, 1996.
[17] P. Gil, J. Henriques, A. Dourado and H. Duarte-Ramos, "Extended Neural Model Predictive Control of Non-linear Systems", Proceeding of IASTED-ASC2000, PP. 94-100, 2000.
[18] .C. Zhu: "Multivariable system identification for process control", Elsevier Science, Oxford, 2001.
[19] M. Leskens, J.L.F Kessel. Van M. J. van den and O. H. Bosgra, " Nonlinear Model Predictive Control with Moving Horizon State and Disturbance Estimation – with Application to MSW Combustion ", Proceeding of 16th IFAC World Congress, PP.1-6,2005.