International Journal of Engineering & Technology, 7 (4.33) (2018) 498-503.

International Journal of Engineering & Technology

Website: www.sciencepubco.com/index.php/IJET

Research paper



Implementation of IEC 61499 and Model Checking for Drill Simulator

Nur Izza Ainaa M. Ridza, Saifulza Alwi*

Faculty of Electrical Engineering, Universiti Teknikal Malaysia Melaka, Hang Tuah Jaya, Melaka, Malaysia
**Corresponding author E-mail: saifulza@utem.edu.my*

Abstract

Reusability of control codes is one of the basic angles in mechanical robotization, especially for the advancement of high dependable control frameworks. In this paper, we examine a general structure and usage of IEC 61499 standard that can be utilized to speak to conveyed control frameworks and rebuilding the control programs. This paper likewise expects to change the current IEC 61131 based model of computerization framework into the models that pursues IEC 61499 standard. We utilize a bore test system as precedent by mimicking the model utilizing Function Block Development Kit (FBDK) in light of IEC 61499. Accordingly, a piece of the control codes can be used for reusable reason to accomplish framework control objective.

Keywords: *IEC 61499; IEC61131; Function Block Development Kit; Industrial Automation.*

1. Introduction

The IEC 61131 [1] standard for Programmable Logic Controller (PLC) programming has been commonly gotten by vendors and clients for automated headways. In any case, there's creating comprehension of the IEC 61131-1 confinements for fulfilling flexibility and reconfigurability of computerization systems. Hence, in spite of the reality that all major PLC vendors are laying out their things as shown by IEC 61131 standard, a few opposite-ness between different PLC brands is as however the case, which limits flexibility of substituting one brand PLC by another. The necessity for decentralized control is ever creating for a few reasons, for illustration, versatility and faithful quality (a halfway controlled system deduces single reason of disillusionment in case there ought to emerge an event of a partitioned in any piece of the system), be that as it may PLCs are awful to actualize spread control.

IEC 61499 [2] standard invigorates the improvement of modern engineering innovations planning to assist decrease plan endeavors and empower quicker and simpler reconfiguration. The standard approach in managing with engineering is abnormal when compared to that other standards and their utilize within the space of control and mechanization.

IEC 61499 truly characterizes "reference design" for programming of appropriated process estimation and control frameworks (DPMCS). The standard fuses propelled programming advancements, for example, the exemplification of usefulness, part based plan, occasion driven execution and circulation. Thus, explicit usage accessible from various suppliers of field gadgets, controller equipment, human-machine interfaces, correspondence systems. The IEC 61499 has been executing of circulated control frameworks as for detail, usage and approval with the Function Block Development Kit (FBDK), CORFU Engineering Support System, ISaGRAF v. 5.0 and Workbench. By applying formal technique, the structure procedure of rationale control is checked and approved. The formal technique is flood with the casual determination, formalization, formal particular, usage and acknowledgment. The critical thing in confirmation and approval process is the formal determination of the structure control.

Model checking is a broadly utilized formal technique where the framework to be confirmed is spoken to by an appropriate model and the ideal property to be confirmed is checked by methodically investigating all the conceivable states that the demonstrated framework may experience in a savage power way. By thinking about every single conceivable situation, the checked property can be ensured relying upon the rightness of the framework show. For example, a typical model checking practice is to fabricate the model utilizing a state progress framework and to indicate the fleeting properties of the framework utilizing direct worldly rationale (LTL) [3]. Worldly rationale is formalism for portraying rationales and its connection after some time in responsive frameworks. Fleeting rationale additionally has utilized in PLC based control rationale in [4].

Model checking is helpful with regards to the confirmation of PLC frameworks, since it tends to be simpler to show low-level PLC programming as state progress frameworks contrasted with traditional PC programming. In addition, since the PLC programs should be exchanged often among various PLC equipment, demonstrating assumes an essential position in PLC programming in abstracting ceaselessly pointless subtleties. Considerably progressively, standard graphical dialects like FBDs or (Sequential Function Charts) [5] and generally acknowledged displaying dialects like Petri nets can possibly be meant changes frameworks all the more effectively.

By utilizing model checking in PLC program advancement, the verification isn't thorough however can likewise be performed before in the improvement procedure, contrasted with basic field testing, without meddling with ordinary creation.

In this paper, we present Drill simulator plant in based IEC 61499 and advantages of using IEC 61499 function blocks as architectural framework for the design of distributed industrial automation systems and their reusable components.

Copyright © 2018 Authors. This is an open access article distributed under the Creative Commons Attribution License, which permits unrestricted use, distribution, and reproduction in any medium, provided the original work is properly cited.

2. Description of the plant

Drill Simulator [6] was built at the Logic Control Lab of the University of Kaiserslautern to have a least working plant for the test of unused approach. It is associated to a Siemens SMP16 IPC running a Soft-PLC info group Software GmbH.
The reason of this plant is to replicate the conduct of an automated drilling machine. The system is using four inputs signals and four outputs signals.

Table 1: I/O Variables of the Drill Simulator

Address	Name	Meaning
I0.0	start_button	Start of the drilling cycle
I0.1	part_in_position	A part is at the drilling position (switch)
I0.2	lower_position	Drill head is at the lower position
I0.3	upper_position	Drill head is at the upper position
Q0.0	active	The drill is working
Q0.1	motor	Drilling motor is ON
Q0.2	move_down	Drilling head moves down
Q0.3	move_up	Drilling head moves up

2.1. Drill simulator control plant

In this paper, a drill simulator control example will be used to illustrate features of new IEC 61499 function blocks.

2.1.1. Basic drill simulator control concept

The major components of drill simulator system are sensors, push button, switches and actuators by LED's. At that point the ultimate framework employments four signals and four yields signals in Table 1. To control the drill simulator, an arrangement of criticism inputs and yields are required. Too a few status sign signals of the drill simulator system are delivered. Ordinarily drill simulator system can run either auto mode or manual mode. A control board comprises of switches and buttons to permit full control of a specific bore simulator.

2.1.2. Implementation of drill simulator control

2.1.2.1. Ladder diagram PLC platform

Ladder diagram of drill simulator is outlined to provide diagram of the control flow chart. Each rung of the ladder diagram in PLC compares to how the bore test system control state machine is worked by arrangement.

2.1.2.2. IEC 61499 FB Implementation of drill simulator control

The designing of drill simulator by the FBDK simulation is different than using the PLC procedure. The top level structure of an IEC 61499 project is system configuration that consists of several devices populated by function blocks networks. On the bottom level of the system hierarchy, each drill simulator is represented by a basic function block. The publisher and subscriber communication function blocks are used to exchange data between control FBs and HMI FBs. This communication is based on UDP/IP over Ethernet.

a. Drill simulator FB

The drill simulator control is outlined in basic function block. Basic function blocks are software structures intended to execute basic functions of distributed control applications. A basic function block may have internal variables, one or more several algorithms and execution control chart (ECC).

Each execution control state (EC State) compares to a single step in PLC program or single state in state machine. The algorithms in each EC State are written in Java. When the input event is activated, the related information inputs to that specific event will be studied into FB and ECC shall change its state depending on updated event and data inputs. The output events and data also would be updated when the algorithm finishes the execution.

b. Human machine interface

There's a comparison between IEC 61499 function blocks and IEC 61131. The Human Machine Interface (HMI) interior the IEC 61499 can be coordinates inside the function blocks systems. Moreover, an IEC 61499 function block, not fair as it were control calculations but moreover information and HMI are included. The instruction of the execution movement of these physical gadgets can be put away interior the block. A primary control board and number of control stations for bore test system are built into the function block organize to permit clients control the test bed through HMI made by IEC 61499. In expansion, the function block is built up within the graphical demonstration by HMI function blocks and the framework can be running utilizing FBDK simulation. This combination of both HMI and simulation can produce the running of the working system.

c. System overview

The ultimate step of plan an IEC 61499 framework is to convey all basic, composite, HMI and communication work pieces into a framework configuration. It is critical enhancement of IEC 61499 that the application can be effectively subdivided into a few dispersed gadgets. Each gadget is running freely and trade data with other gadgets by utilizing communication FBs. This include offers progressed reconfigurability, excess and dispersion as compared to the current PLC world. In case a portion of the framework is defective for occurrence a gadget is in halt, the IEC 61499 framework seem analyze issues naturally and reconfigure framework in real-time operation.

3. Transformation from IEC 61131 to IEC 61499

3.1. Transformation rules

Programs in IEC 61131 programming languages can be converted into IEC 61499 function blocks [7] by implementing the following steps:

1. The IEC 61131 function block diagram (FBD) can be placed into an algorithm of IEC 61499 basic function block with minor changes. The important is when a state change depending on a data input, there must be an input event associated with that data input. As the IEC 61499 function blocks are event-driven, without that additional event input, the ECC inside basic function will not be executed.
   The execution of the PLC sellers, settled function block structures are doable. To delineate, FBD inside a FB will exchange to composite capacity square. Extra, complex calculation or circling can be written in abnormal state programming dialects like C or Java instead of stepping stool rationale to revise enhancement.

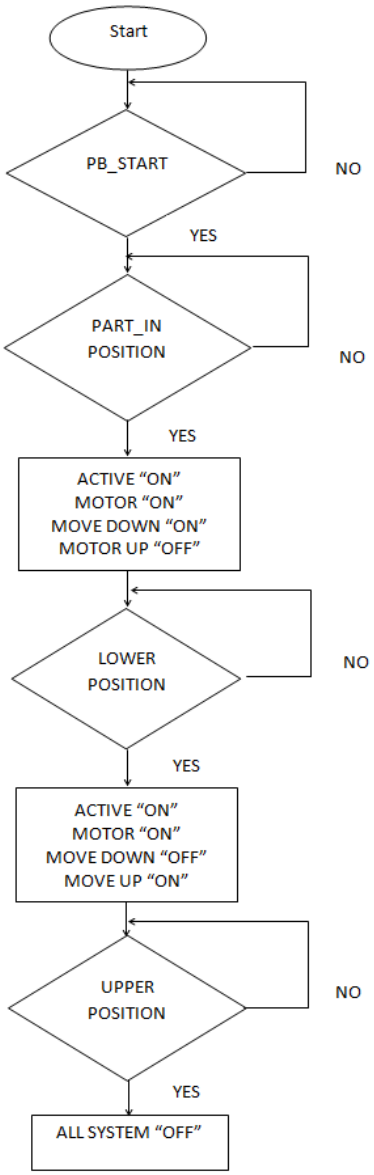

Fig. 1: Flowchart of Drill Simulator

Here is the summary of the overall basic translations rule.

Table 2: Translation rules table for programming languages

IEC 61131 Languages	IEC 61499 Format
Function Block Diagram	Basic/Composite FB
Ladder Diagram	Basic FB
Structure Text	Basic FB
Instruction List	Basic FB
Sequence Function Control	ECC

2. The primary premise for changing over to ECC from SFC is that no simultaneous state exists in the SFC. As characterized in the IEC 61499 standard, just a single EC state can be in dynamic state at one time. Every EC state in ECC can guide to a transition in a non-simultaneous SFC. As ECC only exists in basic function block, so when exchange SFC to ECC, the SFC must have no references to composite FB builds.

3. As there is no worldwide variable in IEC 61499, the worldwide information can be embodied in one function block and that block should be unequivocally associated to all function blocks in the application which may need to get the information. The Service Interface Function Blocks (SIFB) shall provide read and compose access to the memory where the worldwide factors put away. Likewise this SIFB must take the play the job to guarantee in every case just a single function block can refresh values at one time.

4. To lessen the power utilization of whole framework, just the essential calculations will be executed in every unit of time. This structure will limit the quantity of information sources and yields to be empowered in every execution time. Concerning vast size of framework, to forestall pointless power utilization is basic for framework execution and economy contemplations.

5. In IEC 61131-3, all projects are cyclic undertakings, regardless of whether it isn't important to run consecutively and occasionally for all assignments. Cyclic errand can be likewise actualized in IEC 61499 as pursues: a cycle producing square is required as starting occasion trigger to give a patterned occasion. When the last capacity obstruct in the chain completes its execution, a "Done" piece is required to go back to this repeating occasion generator to proceed. Be that as it may, filter time in PLC is basic for all constant applications. To keep a long output time for each cycle, the application must be upgraded in occasion driven way, with the goal that just least necessary capacity squares will be executed. This can enhance application effectiveness altogether.

A table of terminology mapping table is provided as migration suggestions.

Table 3: Terminology Comparison Table

IEC 61131 Terminology	IEC 61499 Terminology
Configuration	System Configuration
Resource	Device
Task	Resource
Program	Application

3.2. Limitations

Though present day apportionment of IEC 61499 is essentially an issue of time, there still some concerns ought to have been tended to sometime recently IEC 61499 can be passed on by and large. The primary issue is in IEC 61131 executions; SFC can have different states energetic at the same time. However, beneath current meaning of IEC 61499, fair a single is allowed to be show energetic state in ECC. This dodges facilitate alter of the old FBs to the modern ones. Second, there's no around the world memory sharing over the function blocks. Actualizing get to around the world data by implies of "capacity" function block makes the arrangement untidy and ambiguous.

4. Advantages of IEC 61499 architecture

The IEC 61499 standard characterizes the new function blocks architecture and broadening the IEC 61131-3 Function Blocks by including occasion driven execution. At one dimension, function blocks give an immediate development from and feasible trade for set up automation programming dialects such as ladder logic, structured text or their exclusive variations. In any case, their application reaches out past basic substitution of inheritance frameworks as a result of the inborn help for appropriated applications and the capacity to give a stage to demonstrating and reproduction with very much characterized interfaces.
The Function Block Development Kit (FBDK) is creating toolset for limit square arrangement. FBDK is remains the most extensively used in light of the way that it is the most settled and is free for informational use. The new type of the ISaGRAF current control structure programming with assistance for IEC 61499 Function Blocks is displayed in [8].

Altogether, function blocks to end up executable on an assortment of equipment, equipment sellers must offer help for the standard. The alternatives stay constrained however are on increment.
The IEC 61499 design appears to offer very ideal reflection/usage proportions. Capacity squares are one structure that guarantees the capacity to break out of the absolutely usage stage, enabling a planner to construct applications whose structure reflects that of the physical frameworks with which it interfaces while as yet being straightforwardly executable.
In [9], reasoned that IEC 61499 is the meaning of the interfaces by means of connector interface function block, which makes it conceivable to configuration work hinders that can be promptly substituted to the fast reconfiguration of uses which is progressively a prerequisite for computerization advances and IEC 61499. The engineering displayed in this paper makes broad utilization of connectors to limit the quantity of associations required and to permit reconfiguration at configuration organize.
Another advantage of utilizing IEC 61499 as a displaying dialect is that is specifically executable, so it can promptly be utilized for recreation. This permits a demonstrated framework and going with control framework to be tried before sending. This would establish a genuine progression contrasted with the best in class, where reenactment is utilized just for general framework prototyping at beginning periods of development.

5. Methodology

In this section, we explain about the ladder diagram of the drill simulator and the designed function block systems based in IEC 61499.

5.1. Ladder diagram of drill simulator

Firstly, the drill simulator is design by using the ladder diagram of programming logic controller (PLC). CX-Programmer is used to test the ladder diagram. The LD programming is shown in Figure 3.

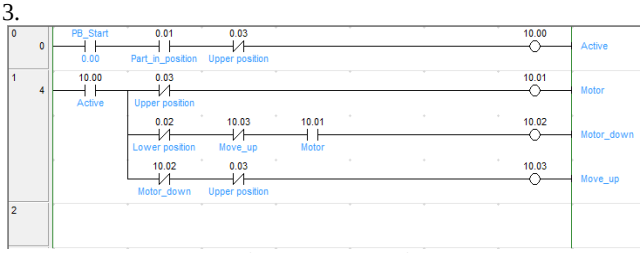

Fig. 1: A part of ladder diagram of drill simulator

5.2. Function block systems based in IEC 61499

The IEC 61499 standard relies upon a fundamental module likewise bears a similar name the Function Block (FB), which addresses a helpful unit of control programming, identified with a gear resource of a control structure. Another idea of capacity square summon is introduction, which depends on events. Data about event is passed starting with one function block then onto the next by methods for event factors. The idea of event in a somewhat unique shape in mechanization frameworks designing as falling and rising factors, which demonstrate esteem changes presented by a Boolean variable.
A FB case is portrayed by its form name and event name, a lots of event inputs/yields, a course of action of data inputs/yields, an execution control outline (ECC), inner information, and interior calculations.
The interface of function block in Figure 3 is portrayed by the list of input event variables, input data variables and adapter's sockets, output event variables, output data and adapter plugs. In graphical function block, the block has "head" and "body". The upper part of the block's interface is frequently alluded to as the "head" and the lower as the "body" of the function block interface. Event input/outputs are recorded in the head while data inputs and outputs are associated to the body.
Events serve for synchronization and associations among the execution control mechanisms in interconnected systems of function blocks. A block sending information must produce an occasion and pass it to the getting hinder so as to guarantee the information are perused.
The information are composed as in programming dialect. The 61499 norms allude especially to the information sorts of IEC 61131.
After the ladder diagram is run, the simulation of function block in FBDK is run. The simulation of the Drill Simulator is shown in Figure 4 and 5.

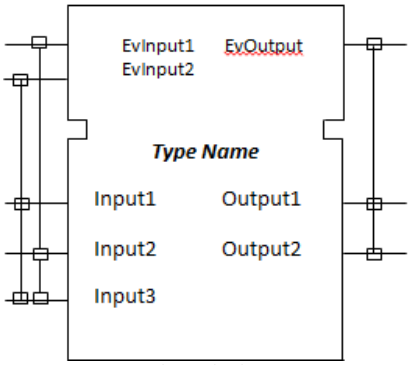

Fig. 2: Interface of a function block

5.3. Model checking

Model checking is a programmed method for confirming limited state simultaneous frameworks. Model checking investigates the state-space subsequently demonstrating that the ideal property holds for each express a framework may experience. State-space decrease procedures have been created, even with a specific spotlight on modern computerization [10], accordingly diminishing the quantity of experienced states by utilizing deliberation, dividing a few states into proportionality classes. Model checking is utilized to confirm properties at configuration time of a framework.
Notwithstanding the IEC 61499 work that has been referenced in the presentation, with deference show checking of IEC 61131 projects has been considered completely in [3]. Other work on model checking of IEC 61131-3 dialects has been completed with regards to Sequential Function Charts.

5.4. Formal verification approach

Verification is way toward building up numerical or sensible verifications that demonstrate a framework property to hold for a framework specification or model of a framework. Along these lines, frameworks are confirmed as for particulars of them. Both property and particular must be depicted utilizing a formal dialect. Some programming dialects with very much characterized semantics, for example, numerous practical dialects are considered as a fitting reason for portraying properties [11-12].
The way toward setting up a proof can in foremost be done physically following the set up practices of mathematicians. Here, we are thinking about machine helped and totally auto-mated procedures where a bit of programming scans for a proof or help people in this procedure [13].
In this paper, the simulation of function blocks is utilized and the model checking is utilized to evidence the formal confirmation.
So as to check frameworks, we have to determine properties that indicate the right conduct of a framework. These properties can be gotten from necessities which can be additionally refined as formal prerequisites and into details for confirmation [14].

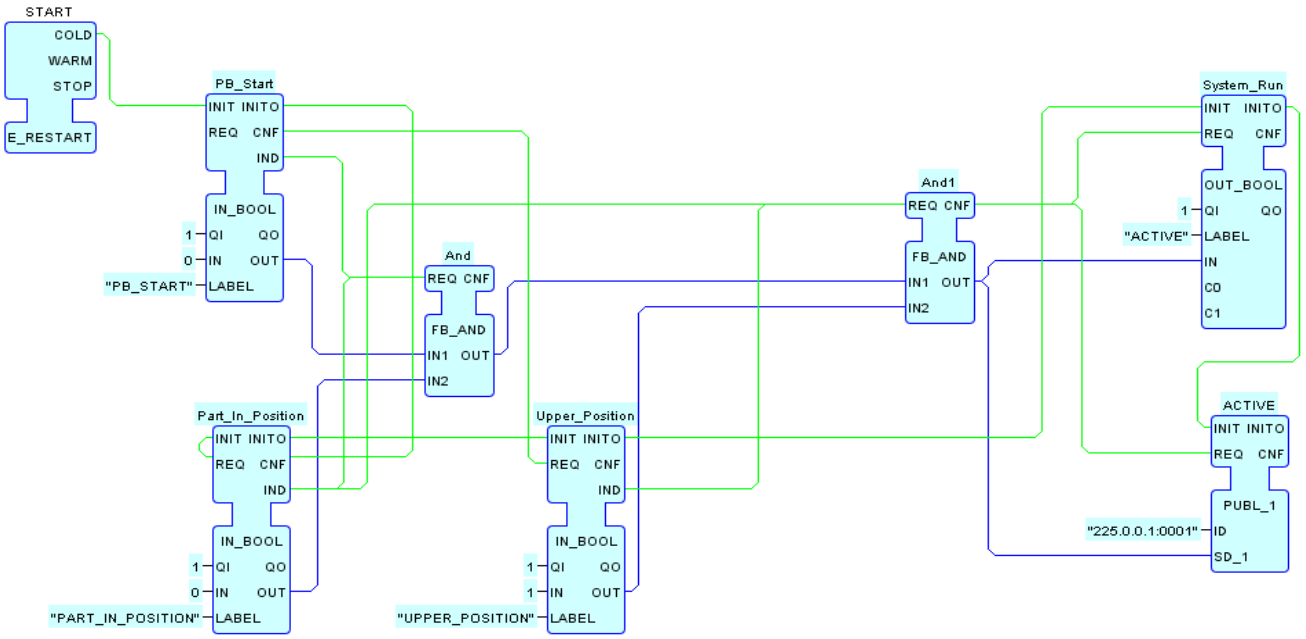

Fig. 3: Simulation of Drill Simulator part I

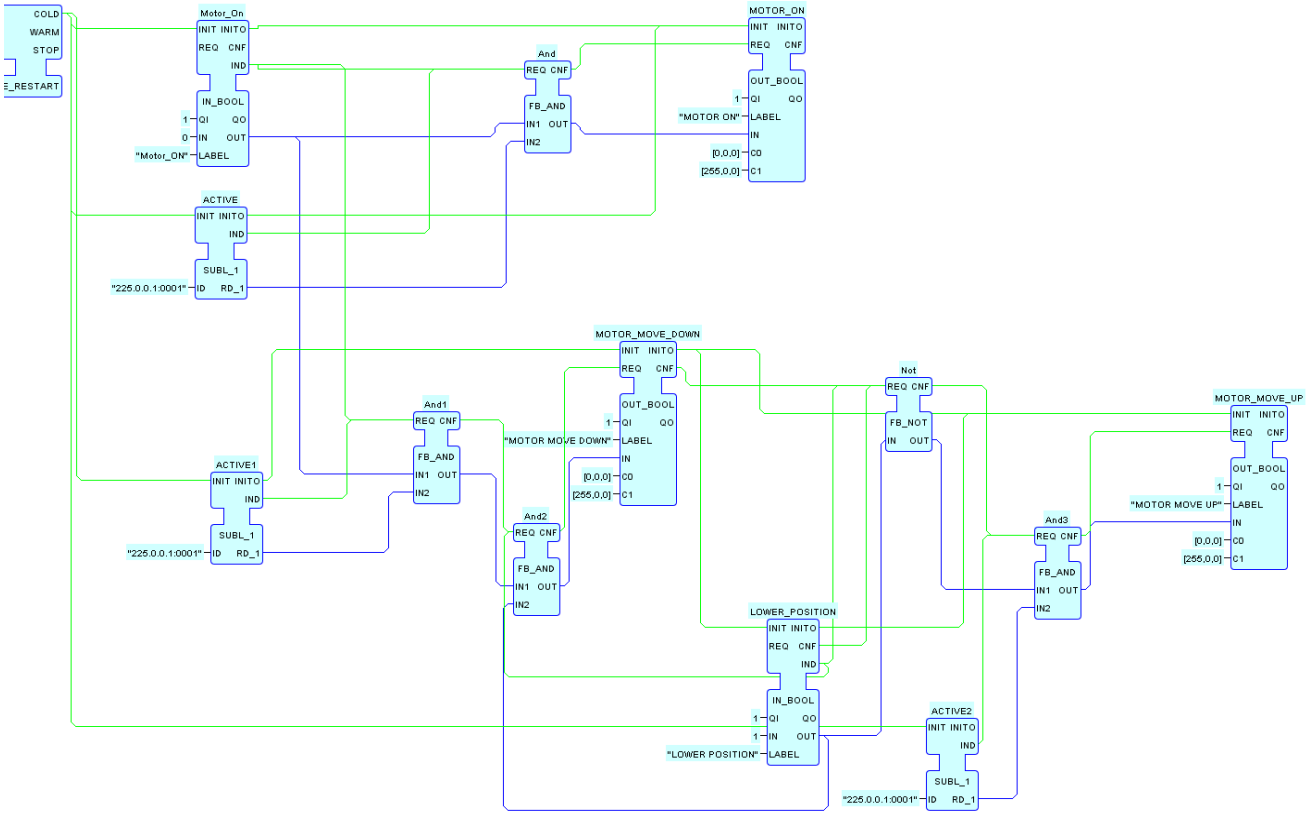

Fig. 4: Simulation of Drill Simulator part II

6. Conclusion

The developing utilization of IEC 61499 standard is by one way or another extremely valuable for the computerization business on the grounds that in all actuality this representation is to formalize the utilization of IEC 61131-3 standard. Be that as it may, the wide research effort in the earlier decade made an outstandingly solid get-together of results to be taken and used by the computerization business.

With the business reliable mechanical assemblies and devices, customers would as of now have the capacity to welcome the different "plan time benefits" of the IEC 61499 gadget chains for system level out-line and execution of automated structure. Distinctive favorable circumstances of IEC 61499, for instance, adaptability and interoperability have not been the genuine stress of the vendors yet.

The more broad allocation of IEC 61499 will empower the business to benefit by the certification of holonic and clever apply autonomy to investigate happens, giving the phase to passing on disseminated applications with bunches or even an immense number of granting self-overseeing control centers.
The extraordinarily promising progression related to IEC 61499 is compromise with territory specific blueprint standards, for instance, IEC 61850 and IEC 62424, which may provoke composed arrangement methods of insight where the control structure can be thus made from the arrangement documentation of other physical system parts.
We have demonstrated in this fundamental investigation of the IEC 61499 standard that the control codes can really be reused on account of the setup of the framework has changed.
The IEC 61499 standard has significantly added to the learning of passed on systems plan in the cutting edge automated space by giving the acceptable documentation and building that is equal to the PLC programming structure of IEC 61131-3.

Acknowledgement

The authors are pleased to acknowledge the financial and administrative support from the Minister of Education (MoE), Malaysia and Universiti Teknikal Malaysia Melaka under the FGRS/1/2015/TK04/FKE/02/F00263 research grant project entitled “A Novel Method of Groebner Bases Computation for Distributed Discrete Controllers”.

References

[1] International Electro-technical Commission (IEC), "Programmable controllers - Part 3: Programming languages," IEC, 2003.
[2] V. Vyatkin, "IEC 61499 function blocks for embedded and distributed control systems design," Instrumentation, Systems, and Automation Society, 2007.
[3] A. Pnueli, “The temporal logic of programs,” Proceedings of the IEEE 18th Annual Symposium on Foundations of Computer Science, 1977, pp. 46-57.
[4] O. Ljungkrantz, K. Akesson, M. Fabian, and C. Yuan, “A formal specification language for PLC-based control logic,” Proceedings of the 8th IEEE International Conference on Industrial Informatics, 2010, pp. 1067-1072.
[5] International Electro-technical Commission (IEC), “International Standard IEC61499-1: Function Blocks-Part 1: Architecture,” IEC, 2005.
[6] G. Frey and L. Litz, “A Petri Net based approach to the development of correct logic controllers,” Proceedings of the 2nd International Workshop on Integration of Specification Techniques for Applications in Engineering, 2002, pp. 116–129.
[7] W. W. Dai and V. Vyatkin, “A case study on migration from IEC 61131 PLC to IEC 61499 function block control,” Proceedings of the 7th IEEE International Conference on Industrial Informatics, 2009, pp. 79-84.
[8] J. Chouinard and R. Brennan, “Software for next generation automation and control,” Proceedings of the IEEE International Conference on Industrial Informatics, 2006, pp. 886–891.
[9] V. Vyatkin, H. M. Hanisch, S. Karras, T. Pfeiffer, and V. Dubinin, “Rapid engineering and re-configuration of automation objects aided by formal modelling and verification,” International Journal of Manufacturing Research, 1(4), 382-404, 2006.
[10] S. Alwi and Y. Fujimoto, “Formal verification of logic control systems with nondeterministic behaviors,” IEEJ Journal of Industry Applications, 2(16), 306-314, 2013.
[11] S. Alwi and Y. Fujimoto, “Safety property comparison between Gr¨obner Bases and BDD-based model checking method,” Proceedings of the 13th International Conference on Control, Automation, Robotics and Vision, 2014, pp. 511-516.
[12] S. Alwi and Y. Fujimoto, “On a safety of sequential control system based on Gr¨obner Bases computation,” Proceedings of the International Conference on Control Automation and Systems, 2010, pp. 3-28.
[13] S. Alwi and Y. Fujimoto, “A Gr¨obner Bases approach for safety evaluation of logic control system,” Proceedings of the IEEE International Conference on Industrial Informatics, 2010, pp. 1073-1078.
[14] B. Schlich, J. Brauer, and S. Kowalewski, “Application of static analyses for state-space reduction to the microcontroller binary code,” Science of Computer Programming, 76(2), 100-118, 2011.