International Journal of Engineering & Technology, 7 (4.14) (2018) 200-205

International Journal of Engineering & Technology

Website: www.sciencepubco.com/index.php/IJET

Research paper



Effect of Swirl Number on the Combustion Characteristic of Syngas using FGM Model Simulation

N. Samiran[1]*, M. N. M. Jaafar[2], C. T. Chong[2], N. N. M. Hassan[1], A. L. M. Tobi[1]

[1] *Faculty of Engineering Technology, Universiti Tun Hussein Onn Malaysia, Pagoh Higher Education Hub, 84600 Pagoh, Muar, Johor, Malaysia.*

[2] *Faculty of Mechanical Engineering, Universiti Teknologi Malaysia, 81310 Skudai, Johor Bahru, Malaysia*

**Corresponding author E-mail: afzanizam@uthm.edu.my*

Abstract

Synthesis gas (syngas) is one of the potential alternative clean fuel energy in gas-fired boilers swirl burners system. Computational Fluid Dynamic (CFD) simulations were conducted to study the effect of different swirl number on the combustion characteristics of CO-rich syngas in premixed swirl mode using a model boiler swirl burner. The composition of CO-rich syngas is 67.5 % CO, 22.5 % H_2, 5 % CO_2 and 5 % CH_4. Two types of combustion model for simulation analysis were used in this study namely flamelet generated manifold (FGM) and chemical equilibrium (CE) approaches. The CFD results were validated with actual experimental data with the same swirl number. The FGM method shows better agreement with experimental result, hence adopted to model and predict the CO-rich syngas flame characteristic in the reaction zones. The CO-rich syngas was then numerically tested on different type of swirl number including 0.39, 0.59, 0.84, 1.20 and 1.80. Result shows that the angle of flame distribution was apparently equivalence with the vane angle swirler. Swirler with a higher swirl number (1.20 and 1.80) showed lower NO (57%) and lower CO (98%) species compared to the one with a lower swirler number (0.39 – 0.84). Flame with lower swirl number (0.39) exhibited higher temperature, OH and O radical content. Thus, it contribute to the high production of NO and CO species.

Keywords: *CFD, FGM, Premixed swirl, Swirl number, Syngas*

1. Introduction

Synthesis gas (or syngas) is considered as one of the potential alternative clean fuels in the future. Syngas is expected to play an important role in the diversification of energetic sources since it is produced from gasification of coal where the reserves are widely abundance [1]. It is also produced from gasification of multiple solid feedstocks such as organic waste and renewable biomass [1, 2]. The main component of syngas is H_2 and CO and the volume percentages could be CO-rich or H_2-rich. Syngas also contain diluents such as N_2, CO_2 and H_2O, and hydrocarbon content, mainly CH_4 [3]. Syngas is a cleaner gas but it has low calorific value which only accounts for 30% as compared to conventional natural gases [2].

Syngas can be directly burned in power generation sector (boiler, engine, furnace, gas turbine, and burner) or further processed for other gaseous or liquid products. However, current existing combustor used for traditional hydrocarbon combustion need substantial improvements to burn syngas [4]. Since small scale power of micro turbines (<500 kWe) is capable to burn lower calorific fuel and lean (premixed) combustion regimes, syngas have high potential to be used in this type of applications. Current design of turbine burners also involves the use of lean premixed fuels combustion technique and swirler mechanism.

Premixed combustion was identified as a promising candidate for emissions reduction. Lean mixture combustion is specifically can produce extremely low NOx emission levels with only a slight increment of hydrocarbon emission [5]. Gaseous fuel in recent industrial applications is often burnt using lean premixed approach and well established in land based power generation gas turbines to achieve low NOx emissions. Towards a near zero emission combustion technology, it is therefore interesting to use clean fuel of syngas in lean premixed combustor [6, 7].

Current design of burners also involve the use of swirler mechanism. Swirl burners ensure efficient combustion conditions allowing good fluid mixing and offering long residence time for complete reaction to take place, typically used in the lean premixing of fuel and air to achieved low level of NOx emission [8]. Swirl is used to obtain high mixing rates of fuel and air mixture as well as to stabilize the flames. High strength of swirl leads to formation of internal recirculation zone (IRZ), which is also called as vortex breakdown in fluid mechanics. IRZ plays a vital role in lean premixed by sustaining the hot combustion products and radical as well as enhance the flame anchoring to the recirculation zone [9]. Lean premixed swirl is being used for several decades. However, the fundamental understanding on flame reaction mechanism and turbulence interaction between lean premixed swirl conditions with the consumption of syngas fuel have very little study and not thoroughly investigated. Therefore, it is necessary to establish a framework for the combustion characteristic of syngas particularly in the presence of swirl [4].

The present study use CFD simulation modelling method to study the swirl characteristic of syngas combustion. In CFD simulation of combustion, integration of the detailed chemical mechanism with the direct numerical simulation is computationally expensive due to high requirement on computer specification [10]. Simplifying the description of chemical kinetics could reduce the computa-

Copyright © 2018 Authors. This is an open access article distributed under the Creative Commons Attribution License, which permits unrestricted use, distribution, and reproduction in any medium, provided the original work is properly cited.

tional cost. Tabulated chemistry method like Flamelet generated manifold (FGM) is used to reduce combustion chemistry which then enables the prediction of intermediate species as well as pollutant [11]. FGM is a method which considers a multidimensional flame as an ensemble of one dimensional flames similar to a flamelet approach [12]. Therefore FGM solving a set of one-dimensional premixed, non-premixed and partially premixed laminar flame where reaction rates and species mass fractions are tabulated as a function of defined coordinate. Defined coordinate in FGM method including mixture fraction, progress of reaction (progress variable), enthalpy, strain rates and etc. [13]. FGM method uses both complex chemistry and transport processes so that FGM have better prediction on simulation in lean or low temperature region [14].

The capability of FGM method in modelling the combustion numerically has been study by previous researchers. Verhoeven et al. [15] investigate the ability of FGM approach constructed from premixed and non-premixed one dimensional flamelet in modelling laminar methane flame in a co-flow of air. The results are compared with full chemical model. The study reported that significant deviation result was observed when using a simplified transport model for the progress variable y in the application of the FGM. Dinesh et al. [10] study a transitional hydrogen-air non-premixed impinging jet flame using three dimensional direct numerical simulation (DNS) and flamelet generated manifolds (FGM) based on detailed chemical kinetics. Result shows that complex spatial and temporal variations occur in the mixture fraction, progress variable and temperature fields as a vortical structure is observed in the primary and wall jet region. Atoof et al. [16] conducted numerical simulation of laminar premixed CH_4 air flame by FGM method to investigate the sensitivity of progress variable effect on the prediction of flame front. A sensitivity analysis shows that among progress variable, H_2O does not shows monotonic behavior in the reaction zone, which renders it inappropriate as a progress variable choice. Nakod et al. [17] conducted an orderly comparative study of the FGM model and laminar flamelet method (LFM) for various diffusion/premixed flame method. The study reported that the result of simulation simulated by FGM model are physically more accurate than those which use the LFM in all the combustion flames technique.

The present study used FGM method as combustion model for CFD simulation to predict the effect of swirl number on the flame characteristic of syngas in a swirl premixed combustion technique.

2. Methodology

The present study investigated the effect of different swirl number on the performance of syngas combustion by CFD simulation method. The composition of CO-rich syngas with 67.5 % CO, 22.5
% H_2, 5 % CO_2 and 5 % CH_4 was selected in this study [18]. The CO-rich type was selected in view of the lack of comprehensive data under premixed swirl combustion mode considering that H_2-rich is most notably composition studied by previous researches [19].

The burner system with swirler mechanism were presented as in Figure 1. Axial swirler design consists of outer and inner diameters which are 40 mm and 26 mm respectively. It also consists of 6 straight vanes fixed at an angle of 45° with respect to the incoming flow. The thickness of each vane is 1.5mm. The characteristic of combustion for 5 different swirl number which refer to the different configuration of swirler vane angle were compared. Different configuration of swirler vane angle was shown as in Figure 2 The vane angle were set from 25° to 65° with the difference of 10° for each of the increment. The swirl number was then calculated from the vane angle with respect to the geometry of the burner. Swirl number for an annular swirler with constant vane angle, θ was hence formulated as in equation below

$$S_n=\left(\frac{2}{3}\right)\frac{1-\left(\frac{D_h}{D_{sw}}\right)^3}{1-\left(\frac{D_h}{D_{sw}}\right)^2}\tan\theta \quad (1)$$

Where Dh is defined as swirler hub diameter, Dsw is define as swirler diameter and θ is defined as swirler vane angle from axial centreline axis. All calculated swirl number from different swirl angle of swirler were listed as in Table 1.

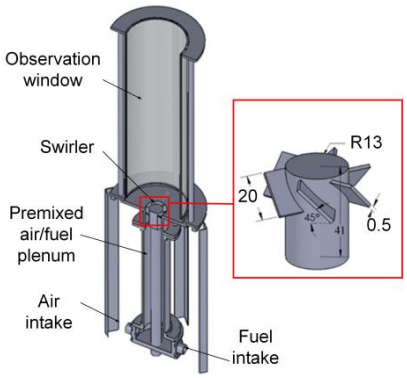

Fig. 1: Cross section of swirl burner and swirler

Table 1: List of Swirl number with respect to the vane angle

Vane angle (°)	swirl number (Sn)
25	0.39
35	0.59
45	0.84
55	1.20
65	1.80

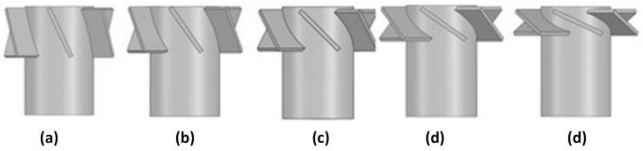

Fig. 2: Swirler with different vane angle (°) and swirl number (Sn) of a) 25° -Sn = 0.39, b) 35° - Sn = 0.59, c) 45° - Sn = 0.84, d) 55° - Sn = 1.20, e) 65° - Sn = 1.80

2.1. Species Model method

FGM method is computed with the detailed chemistry reaction scheme (GRI mech 3.0) which involves more than 50 transport equations and 100 chemical reactions. The premixed swirl combustion in this study is modelled using commercial CFD software Ansys fluent. This study used partially premixed model to model the premixed swirl combustion since this model can be used to model both the non-premixed and perfectly premixed combustion in Ansys fluent. Partially premixed combustion parameters are mapped on two variables describing mixing (mixture fraction, f) and reaction progress (reaction progress variables, c).

In Ansys fluent, one dimensional premixed flamelets is generated to solve the flamelets in reaction progress space. The reaction progress variable is defined by the following equation:

$$c=\frac{\left[\sum_k \alpha_k\left(Y_k-Y_k^u\right)\right]}{\left[\sum_k \alpha_k\left(Y_k^{eq}-Y_k^u\right)\right]}=\frac{Y_c}{Y_c^{eq}} \quad (2)$$

Progress variable defined as a normalised sum of the product species mass fraction. The sum is over all species in the chemical mechanism. From the equation above, Y_k denotes the kth species mass fraction, superscript u denotes the unburnt reactant at the flame inlet, and superscript eq denotes chemical equilibrium at the flame outlet. The coefficient α_k is prescribes accordingly so that the reaction progress, c, increase monotonically through the flame.

$\alpha_k = 0$ for all species except $\alpha_{CO_2} = \alpha_{CO} = 1$ for hydrocarbon combustion and $\alpha_{H_2O} = 1$ for fuel without C element such as H_2. According to Ansys fluent, the one dimensional adiabatic flamelet equations can be transformed from physical-space to reaction-progress space.

$$\rho\frac{\partial Y_k}{\partial t}+\rho\frac{\partial Y_k}{\partial c}\dot{\omega}_c=\rho\chi_c\frac{\partial^2 Y_k}{\partial c^2}+\dot{\omega}_k \quad (3)$$

$$\rho\frac{\partial T}{\partial t}+\rho\frac{\partial T}{\partial c}\dot{\omega}_c=\rho\chi_c\frac{\partial^2 T}{\partial c^2}-\frac{1}{c_p}\sum_k h_k\dot{\omega}_k+\frac{\rho\chi_c}{c_p}\left(\frac{\partial c_p}{\partial c}+\sum_k c_{p,k}\frac{\partial Y_k}{\partial c}\right)\frac{\partial T}{\partial c} \quad (4)$$

Where Y_k is the kth species mass fraction, T is the temperature, ρ is the fluid density, t is time, $\dot{\omega}_k$ is the kth species mass fraction rate, h is the total enthalpy and $c_{p,k}$ is the kth species specific heat at a constant pressure. The scalar dissipation rate χ_c is defined as

$$\chi_c=\frac{\lambda}{\rho c_p}|\nabla c|^2 \quad (5)$$

where λ is the thermal conductivity. The scalar dissipation χ_c varies with c and is an input to the equation set. Equation 5 become

$$\rho\frac{\partial Y_k}{\partial t}+\rho\frac{\partial Y_k}{\partial c}\dot{\omega}_c=\frac{\lambda}{c_p}|\nabla c|^2\frac{\partial^2 Y_k}{\partial c^2}+\dot{\omega}_k \quad (6)$$

Mixture fraction in FGM can be directly corresponding to the single equivalent ratio of 1D premixed flamelet. Premixed flamelet at different mixture fractions have different maximum scalar dissipations, χ_{max}. In Ansys fluent, the scalar dissipation $\chi_c(f,c)$ at any mixture fraction, f is modelled as

$$\chi_c(f,c)=\chi_{max}^{STO}\exp\left(-2\left(\text{er fc}^{-1}\left(\frac{f}{f_{STO}}\right)\right)^2\right)\exp\left(-2\left(\text{er fc}^{-1}(2c)\right)^2\right) \quad (7)$$

Where STO indicate stoichiometric mixture fraction and $er\,fc^{-1}$ is the inverse complimentary error function.

2.2. Simulation setup and procedure

2.2.1. Grid setup

The numerical grid is important in combustion simulation to meet an accurate simulation requirement. High quality elements with low growth rate are required to simulate the burner region where high temperature and species concentration is involved. Cut shell method which primarily consists of structured hexahedron grid have been chosen in this simulation study as shown in Figure 3. The grid had a size of minimum and maximum of 700,000 cells to 1,000,000 cells respectively. The mesh quality was determined by aspect ratio and orthogonal quality. According to Turkeli-Ramadan et al. [20], hexahedron grid is considered to have good quality of mesh at maximum aspect ratio of 35 and a minimum orthogonal quality of 0.15. In this case, maximum aspect ratio was recorded at 13.43 and minimum orthogonal quality at 0.19 where both is in the range as outline by Turkeli-Ramadan et al. Higher grid density of cells were constructed near the burner mouth region and become coarser when moving away to the burner exit. The fine and saturated mesh is correspond to the high velocity, species and temperature gradient at the burner mouth.

2.2.2. Boundary condition

Syngas with CO-rich composition type was used as fuel in this study. At the inlet, mass flow rate models were used and set according to the equivalence ratio. The simulations were carried out for inlet swirler with different configuration of vane angle which corresponds to different swirl number. The inlet turbulent intensity and hydraulic diameter for fuel were set at 5% and 10 mm respectively. The value of turbulent intensity is based on the reference [21] which also used swirl combustor operating with syngas fuel. The wall of combustor was set at no-slip boundary condition and no-species flux condition. Flow outlet at burner exit was treated as burner outlet condition. The value of static pressure at the outlet boundary was set to zero which relative to the operational pressure.

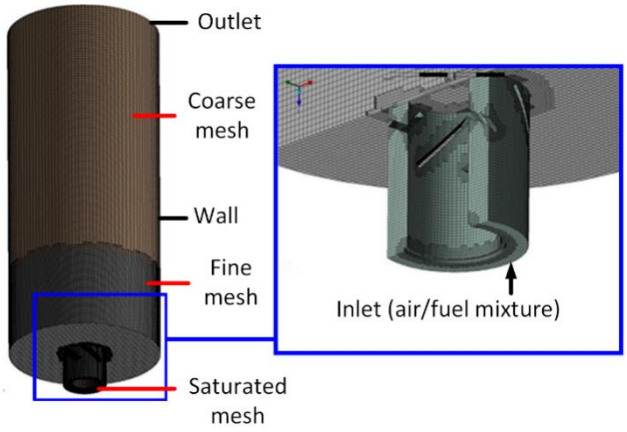

Fig. 3: Grid setup and boundary condition

2.2.3. Fluid flow solver

In this study, the commercial computational fluid dynamics software package ANSYS Fluent 15 with finite volume code was employed to solve the mass, momentum, energy and heat transfer equation. A pressure based solver is used in steady state condition. The fluid flow is described by solving the RANS (Reynold-averaged Navier Stokes) equations. Turbulence models were used to close the RANS equations. There are a few turbulence models available in CFD code. Turbulence model in this simulation is using realizable k-epsilon model. Mayr et. al. [22] reported that this model is an improvement of standard k-epsilon model for an axisymmetric jet and on flows with strong streamline curvature. Standard K-epsilon shows unrealistic high temperature as well as different flame shaped compared to realizable K-epsilon. A Semi-Implicit Method for Pressure-Linked Equations (SIMPLE) algorithm scheme was used to compute pressure velocity coupling [22]. Governing equation is discretized using second order upwind scheme for equation of momentum, turbulent kinetic energy and dissipation rate, progress variable and mixture fraction. The Pressure Staggering Option (PRESTO!) scheme is one of the interpolation scheme which computed the values of pressure to solve the momentum equation [23]. The scheme uses the discrete continuity balance for a "staggered" control volume about the face to compute the "staggered" (i.e., face) pressure. Mayr et.al [24] reported that PRESTO! scheme was observed to cause a faster convergence in simulations predominantly for flows with high swirl numbers, high-Rayleigh-number natural convection, high-speed rotating flows, flows involving porous media, and flows in strongly curved domains [23].

3. Result and Discussion

A simulations of high CO-rich combustion at stoichiometric condition using FGM combustion model were conducted to investigate the effect of swirl number on combustion characteristic. The single fuel type and mixture condition were choose for consistencies purpose. The result and discussion on the flame characteristic of syngas including flame temperature distribution, flow velocity of flame and pollutant species in the flame reaction zone were presented in the next section.

3.1. Temperature distribution

Figure 4 shows the comparison of temperature contour for combustion at different swirl number. The temperature contour indicated that the angle of flame distribution was equivalence with the vane angle swirler. The flame height were visibly reduce as the value of swirl number and vane angle is increase. This is depicted by the distribution of flame contour at the temperature value of above 2000 K (illustrated in orange to red contour colors).

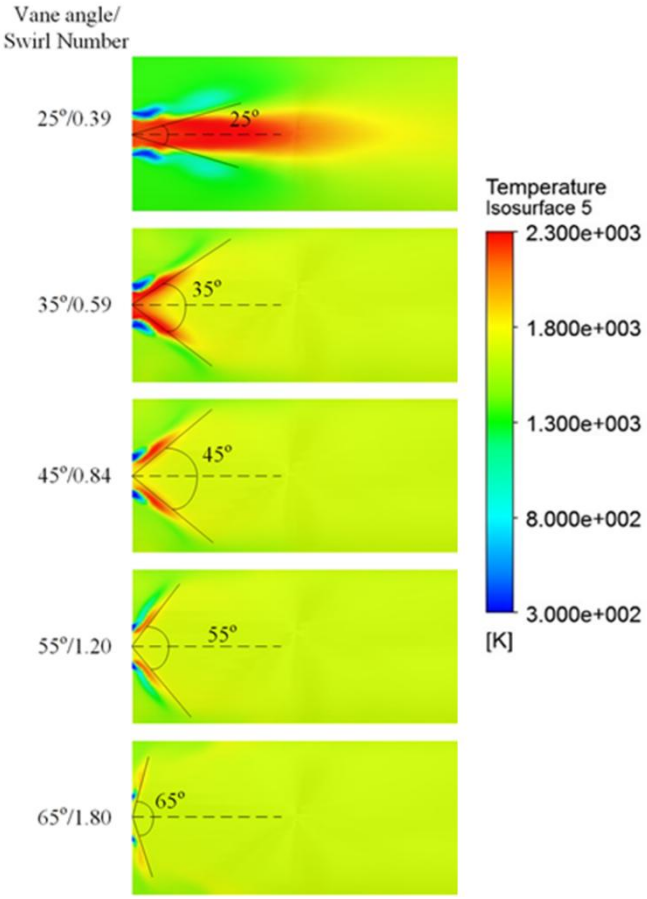

Figure 4: Components of axial, radial and tangential velocity for the flow field of swirl flame.

3.2. Combustion flow characteristic

The flow field of syngas combustion for different swirl numbers were presented in this section. A cylindrical velocities method which comprised of axial, radial and tangential velocities were used to characterize the flow field for each of the cases. Figure 5 shows the position of axial, radial and tangential velocity of vector coordinate in the swirl flow. Each of velocities component (axial, radial and tangential) for each flame at different swirl numbers against radial distance were depicted as in Figure 6.

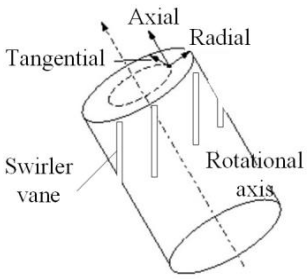

Figure 5: Components of axial, radial and tangential velocity for the flow field of swirl flame.

Each of velocities profile were reported at axial locations of 0.06m from burner exit. For axial velocity, all flames show a similar profile shapes, albeit with a slight variation of magnitude and peak position due to different swirl angle position except for flame at swirl number of 0.39. Flame at swirl number from 0.59 to 1.80 show almost identical peak velocity which were 1.32 m/s to 1.4 m/s. Flame at swirl number of 0.39 shows a reversed peak close to burner mouth position which between -0.02 to 0.02 m at axial location of 0.06m. Flame at lower swirl number also show higher reversed peak velocity which were -4.04 and -4.9 m/s for swirl number 0.59 and 0.39 respectively.

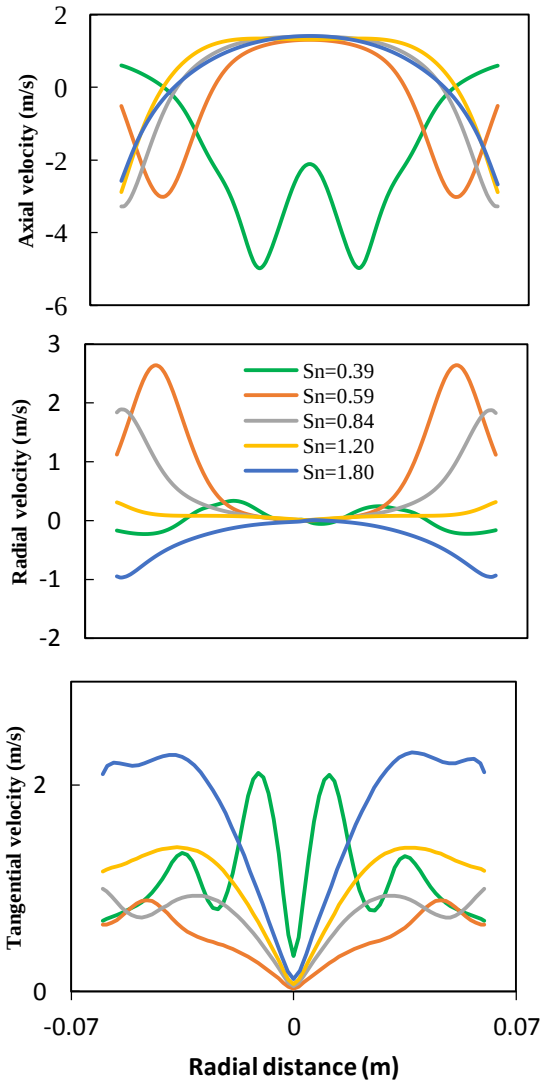

Figure 6: Axial, Radial and tangential velocity for flame at a different swirl angle as a function of radial direction

For tangential velocity, flame at swirl number from 0.59 to 1.80 show peak velocity approaching both left and right side of the wall. Whereas for flame at swirl number of 0.39, the tangential velocity tend to be developed within the centerline area. High swirl number of 1.80 was typically showed higher peak tangential velocity. Higher tangential velocity indicated that flame at swirl number of 1.80 produces a region of stronger sheared flow compared to the flame with lower swirl number.

For radial velocity, higher swirl number show lower velocity as compared with lower swirl number. For example, swirl number of 1.20 and 1.80 show minimum velocity at 0.5 and 1m/s respectively. Whereas swirl number of 0.59 and 0.84 show higher radial peak velocities of 0.3 and 0.2 m/s respectively. Higher swirl number show lower value of radial velocity as the flame was sheared to tangential rather than outward (radial) direction. Lower swirl

number show high peak value as the flame is dominantly move to the outward direction. It is also noticed that lowest swirl number of 0.39 show lower value at both tangential and radial direction.

3.3. Reaction species and temperature characteristic

Figure 7 show the NO and CO species in reaction zone for each of flame at different swirl number. For NO species, high swirl number of 1.80 shows relatively constant distribution of NO species at the value of mole fraction of 0.0016. Moderate swirl number of 0.59 to 1.20 were generally show higher maximum peak of NO compared to swirl number of 1.80. The maximum peak value of low swirl number of 0.39 was higher than other swirl number typical at radial distance closer to the burner exit. It is calculated that the peak value of swirler with high swirl (1.80) number produced 57% and 98% lower NO and CO species respectively as compared to low swirl number (0.39).

The value of NO species seems to exhibited strong relation with the distribution of temperature as thermal NO mechanism was take place. Figure 8 shows that NO species was relatively higher with temperature value for flame with lower swirl number (0.39) at the centerline of the burner exit.

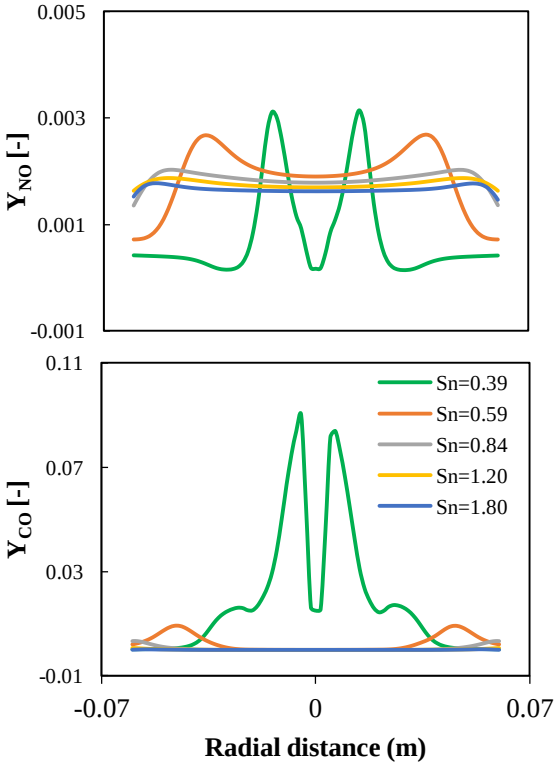

Figure 7: Mole fraction of NO and CO for flame at different swirl number against radial distance.

The radical of OH and O species were also a critical component which contributing to the formation of NO through the zeldovich mechanism as in equation below.

$$O+N_2 \leftrightarrow NO+N \quad (8)$$
$$N+O_2 \leftrightarrow NO+O \quad (9)$$

The above reaction is extended to become

$$N+OH \leftrightarrow NO+H \quad (10)$$

Figure 8 also depicted the distribution of radical species of OH and O as a function of swirl number. It is clearly shows that high NO species at the centerline was relatively correlated with the high concentration of OH and O species particularly for both lower swirl number, Sn = 0.39 and Sn = 0.59.

The results of radical species indicated that low swirl number (in this case is 0.39 and 0.59) provide an area with high OH and O species availability at the centerline. On the other hand, higher swirl number (in this case is >0.59) hindered the radical species of OH and O availability at the centerline until approaching both domain of side wall. Thus, it is concluded that flame with higher swirl number is affectively capable in limiting the production of NO species.

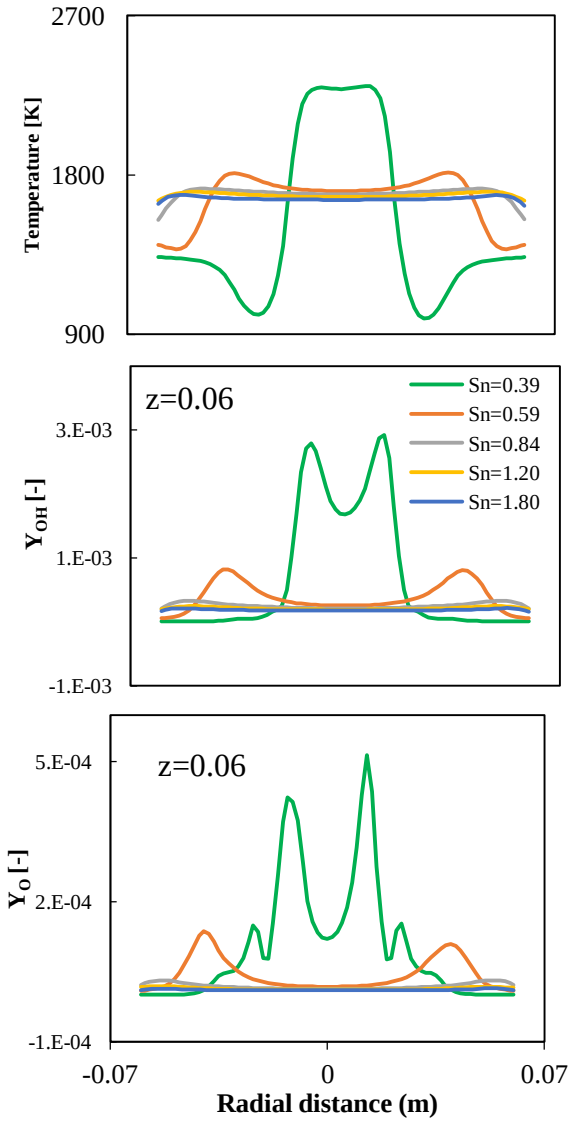

Figure 8: Temperature distribution, mole fraction of OH and O species for flame at different swirl angle against radial direction

4. Conclusion

The present study investigated the effect of swirl number on the performance of premixed combustion of syngas by using CFD simulation analysis. The simulation analysis was using flamelet generated manifold (FGM) method as a combustion model. FGM method is a simplification of chemical kinetics description which could reduce the computational cost. On the other hand, FGM is capable to predict intermediate species as well as pollutant. The result showed that swirler with high swirl number produce high velocity in the axial and tangential direction of flame propagation. Whereas low swirl number produce low velocity in any direction of flame propagation. Swirler with high swirl number also produce 57% and 98% lower NO and CO species respectively as compared

to low swirl number. Higher temperature, OH and O radical content exhibited by flame with lower swirl number contribute to the high production of NO and CO species

Acknowledgement

The authors would like to thank universiti tun hussein onn malaysia (uthm) for supporting this research study.

References

[1] Lee, MC, Seo, SB, Yoon, J, Kim, M, and Yoon, Y. (2012) Experimental study on the effect of N2, CO2, and steam dilution on the combustion performance of H2 and CO synthetic gas in an industrial gas turbine. *Fuel* 102: 431-38.

[2] Burbano, HJ, Pareja, J, and Amell, AA. (2011) laminar burning velocities and flame stability analysis of H2/CO/air mixtures with dilution of N2 and CO2. *Int. J. Hydrogen Energy* 36(4): 3232-42.

[3] Boivin, P, Jiménez, C, Sánchez, AL, and Williams, FA. (2011) A four-step reduced mechanism for syngas combustion. *Combust. Flame* 158(6): 1059-63.

[4] Ranga Dinesh, KKJ, Luo, KH, Kirkpatrick, MP, and Malalasekera, (2013) W. Burning syngas in a high swirl burner: Effects of fuel composition. *Int. J. Hydrogen Energy* 38(21): 9028-42.

[5] Azimov, U, Tomita, E, Kawahara, N, and Harada, (2011) Y. Effect of syngas composition on combustion and exhaust emission characteristics in a pilot-ignited dual-fuel engine operated in PREMIER combustion mode. *Int. J. Hydrogen Energy* 36(18): 11985-96.

[6] Mansouri, Z, Aouissi, M, and Boushaki, T. (2016) Numerical computations of premixed propane flame in a swirl-stabilized burner: Effects of hydrogen enrichment, swirl number and equivalence ratio on flame characteristics. *Int. J. Hydrogen Energy* 41(22): 9664-78.

[7] Tunçer, O, Kaynaroğlu, B, Karakaya, MC, Kahraman, S, Çetiner-Yıldırım, O, and Baytaş, C. (2014) Preliminary investigation of a swirl stabilized premixed combustor. *Fuel* 115: 870-74.

[8] Ding, N, Arora, R, Norconk, M, and Lee, S-Y. (2011) Numerical investigation of diluent influence on flame extinction limits and emission characteristic of lean-premixed H2–CO (syngas) flames. *Int. J. Hydrogen Energy* 36(4): 3222-31.

[9] De, A and Acharya, S. (2012) parametric study of upstream flame propagation in hydrogen-enriched premixed combustion: Effects of swirl, geometry and premixedness. *Int. J. Hydrogen Energy* 37(19): 14649-68.

[10] Ranga Dinesh, KKJ, Jiang, X, and van Oijen, JA. (2012) Numerical simulation of hydrogen impinging jet flame using flamelet generated manifold reduction. *Int. J. Hydrogen Energy* 37(5): 4502-15.

[11] Mukhopadhyay, S, Bastiaans, RJM, Oijen, JAv, and Goey, LPHd. (2015) Analysis of a filtered flamelet approach for coarse DNS of premixed turbulent combustion. *Fuel* 144: 388–99.

[12] Nakod, P, Yadav, R, Rajeshirke, P, and Orsino, S. (2014) A Comparative Computational Fluid Dynamics Study on Flamelet-Generated Manifold and Steady Laminar Flamelet Modeling for Turbulent Flames. *J. Eng. Gas Turbines Power* 136(8): 081504.

[13] Nguyen, P-D, Vervisch, L, Subramanian, V, and Domingo, P. (2009) Multidimensional flamelet-generated manifolds for partially premixed combustion. *Combust. Flame* 157(1): 43-61.

[14] Donini, A, Bastiaans, RJM, van Oijen, JA, and de Goey, LPH. (2015) Differential diffusion effects inclusion with flamelet generated manifold for the modeling of stratified premixed cooled flames. *Proc. Combust. Inst.* 35(1): 831-37.

[15] Verhoeven, LM, Ramaekers, WJS, van Oijen, JA, and de Goey, LPH. (2012) Modeling non-premixed laminar co-flow flames using flamelet-generated manifolds. *Combust. Flame* 159(1): 230-41.

[16] Atoof, H and Emami, MD. (2016) Numerical simulation of laminar premixed CH4/air flame by flamelet-generated manifolds: A sensitivity analysis on the effects of progress variables. *J. Taiwan Inst. Chem. Eng.* 60: 287-93.

[17] Nakod, P, Yadav, R, Rajeshirke, P, and Orsino, S. A (2014) Comparative Computational Fluid Dynamics Study on Flamelet-Generated Manifold and Steady Laminar Flamelet Modeling for Turbulent Flames. *J. Eng. Gas Turbines Power* 136(8): 081504.

[18] Samiran, N.A., Ng, J., Mohd Jaafar, M.A., Valera-Medina, A., Chong, C.T., (2016) H2-rich syngas strategy to reduce NOx and CO emissions and improve stability limits under premixed swirl combustion mode. Int. J. Hydrogen Energy 41, 19243–19255.

[19] Samiran, N.A., Ng, J., Mohd Jaafar, M.A., Valera-Medina, A., Chong, C.T., (2017) Swirl stability and emission characteristics of CO-enriched syngas/air flame in a premixed swirl burner Process Saf. Environ. Prot. 112, 315-326.

[20] Turkeli-Ramadan, Z, Sharma, RN, and Raine, RR. (2015) Two-dimensional simulation of premixed laminar flame at microscale. *Chem. Eng. Sci.* 138: 414-31.

[21] Krieger, GC, Campos, APV, Takehara, MDB, Cunha, FAd, and Veras, CAG. (2015) Numerical simulation of oxy-fuel combustion for gas turbine applications. *Appl. Therm. Eng.* 78: 471 - 81.

[22] Mayr, B, Prieler, R, Demuth, M, Potesser, M, and Hochenauer, C. (2015) CFD and experimental analysis of a 115kW natural gas fired lab-scale furnace under oxy-fuel and air–fuel conditions. *Fuel* 159: 864-75.

[23] ANSYS Fluent Theory Guide. (2013).

[24] Mayr, B, Prieler, R, Demuth, M, and Hochenauer, C. (2015) The usability and limits of the steady flamelet approach in oxy-fuel combustions. *Energy* 90: 1478-89.