International Journal of Engineering & Technology, 7 (4.25) (2018) 271-277

International Journal of Engineering & Technology

Website: www.sciencepubco.com/index.php/IJET

Research paper

Time Lapse Based Single Axis MPP Tracking System for Solar Tree by Using Arduino Duemalinove Board

Damala Rajesh Babu[1], M. Rambabu[2]

[1]*Department of Electrical and Electronics Engineering, GMR Institute of Technology,Rajam, Srikakulam, India.*
[2]*Department of Electrical and Electronics Engineering, GMR Institute of Technology,Rajam, Srikakulam, India.*

Abstract

Extracting usable electricity was made possible by the discovery photoelectric mechanism and subsequent eventual evolution of a solar cell which is a semi conducting type that converts usable light into direct current.a hardware model of photovoltaic modules is proposed in this project. The objective of this project is to develop a solar tree model, in which the panels align themselves according to the movement of the sun and track maximum possible solar energy.The proposed model has panels mounted on a structure having a single axis solar tracking system with a view to assess the desired power and enhance the efficiency of solar conversion by consuming very less space relatively. Sunlight is tracked more effective by this tracking system by rotating pv panels in a single axis.In the tracking system optimum power is achieved by tracking the sun in all possible directions.A charge controller limits the rate at which the the electrical ower stored and used.

Keywords: *solar tree, audino board , realy, timelapse tracking.*

1. Introduction

Energy is the foremost measure for all kinds of work done by both human beings and nature. Energy flows in its form is all what is happening in the world. As energy is input to many sectors it plays a main role in improving the country's economy. The per capita energy consumption of a country directly relates to the standard of living in that country [1].

Every country fulfills its energy demands from various sources. We can broadly categorize these sources as conventional and non-conventional. The commercial sources included the fossil fuels (coal, oil and natural gas), hydroelectric power and nuclear power, while the non-commercial sources include wood, animal waste and agricultural wastes. Industrialized countries like U.S.A satisfies its energy demands from many other commercial sources whereas, industrially being developed country like India, the use of commercial and non- commercial sources are equal [2-4].

The semiconductor band gap, on the reflectance of the cell surface (that depends on the shape and treatment of the surface), on the intrinsic concentration of carriers of the semiconductor, and on many other factors like electron mobility, recombination rate, temperature, etc factors. All those photons which have energies less the band gap of PV cells are not used as they generate no voltage or electric current. Photons with energy superior to the band gap generate electricity, but only the energy (all those energies which are corresponding to band gap are used and remaining energy is converted as heat the body of the PV cell [5,6].

Semiconductors with lower band gaps may take advantages of a larger radiation spectrum, but the generated voltages are lower. Si is not the only, and probably not the best, semiconductor material for PV for making semiconductor PV cells. On the other hand, its fabrication is economically sensible in large scale [7]. All those materials which has better conversion efficiency are economically not feasible the physics of PV cells are much complicated and thus not under the scope of this project. (the areas like electric characteristics are sufficient to study the electronic convertors used in this PV system know the electric characteristics of the PV device (cell, panel, and array).PV device manufactures provide provide data that will be used to obtain the mathematical equation of the device I–V curve. (few PV system manufactures even provide I-V curve that are obtained experimentally under different operating conditions. These experimental values and curves validate the mathematical model [8,9].

2. Time Lapse Based Solar Tracking System



Copyright © 2018 Authors. This is an open access article distributed under the Creative Commons Attribution License, which permits unrestricted use, distribution, and reproduction in any medium, provided the original work is properly cited.



Fig. 1: Evolution of The Solar Trees

The hardware model designed in this technology, titled as the solar tree is an artistic combination of technology and nature. (for ages inventors strived to bring up new methods that traps the benefits from solar cell technology This trending concept was adapted, to bring up new technology that absorbs and uses solar power.

The first solar tree was erected in hillsborogh California by solar tree foundation. It produces 20,000 watts energy for a 10,000 lb solar tree at maximum efficiency. But all these designs have fixed panelsi.e, their panels don't move according to the movement of the Sun. An effort is being made in every possible way to track maximum possible solar energy and utilize it in the best possible way.

The hardware model designed in this project overcomes this problem i.e, the panels are arranged in such a manner that they can rotate freely according to the rotation of the Sun. Also the designed structure has adjustable height and has portable feature which makes it all the more convenient i.e, it does not require a large amount of space and can be moved freely to anywhere. It is not fixed.

2.1 The Tracking System

One of the methods to withdraw maximum solar power from solar panels is solar tracking system. There is a need to develop panel which can rotate with respective to sun's motion for tracking maximum heat

For tracking solar energy various methods have been developed. The two main methods for solar tracking system are

1. Sensor based solar tracking system
2. Time lapse solar tracking system

2.1.1 Sensor based tracking system

The solar panels are rotated in the direction of sun light by using stepper motor. To cease maximum sunlight, the solar panels are exposed to sun light. The output of solar panels directly depends on the intensity and the amount of sun light. For rotating the solar panels in the direction of sun light stepper motor is used. To measure the sun light two light sensors are used in this method. For this purpose, Photo diode and light dependent resistors are used.

Resistors which are dependent on light sources are used in this method. Sheets separate the LDRs on both left and right sides of shield. This is main part of this project. The intensity of light is measured with the help of light dependent resistors by using microcontroller. The solar panel is rotated by LDRS using a stepper motor Microcontroller reads values of both light dependent resistors. Light sensors in microcontrollers are used to read the intensity of light.

Stepper motor rotates only when there is difference in light intensities in light sensors and solar panels.. During nights there will be no motion in solar panels. And in mornings, the solar panel rotates by stepper motor as light sensors are turned on. Rotation of motor depends on the intensity of light. Until the light intensities on light sensors become equal, the solar panels they keep on rotating. Solar panels come to rest if they become equal. After 12:00 the process repeats in the opposite direction. The solar panels come to rest when the light intensity of light sensors become equal. This process remains continue during day timing. This method is more efficient and also involves accurate sensors which involves high cost

2.1.2Time Lapse solar tracking system

In this technique of tracking the solar radiation we are not using any sensors but we track the maximum energy by rotating the panel depending on time lapse. Here the average time for which Sun extends its direction in a region is calculated. Depending on the number of hours it is taking to complete its cycle from east to west, the angle through which the panel must be moved is calculated. Now the panel moves along with the Sun. This complete process of time lapse is done through programming in a micro controller and there by controlling the sweep angle of the panel.

3. Components Selection

The main components used for the hardware implementation of this hardware are as follows:

1. Solar panels
2. Geared motors
3. Arduino Board
4. Relay Board
5. Charge controller
6. Battery

There are different types of panels which have variations, among which overall power is the big difference seen. Similar amount of electricity is generated by the poly, mono, thin film or hybrid panels. The "panel efficiency" quoted by manufacturers has very little bearing on the annual generation, whose affect is shown in the requirement of roof space for similar power system.

3.1 Motor control

AC motors that are Fixed-speed controlled, provided with direct-on-line or soft-start starters. AC motors that are Variable speed controlled provided with a range of different power inverter, variable-frequency drive or electronic commutator technologies.

3.2 Arduino Duemalinove Board

3.2.1 Atmega 328p Micro Controller

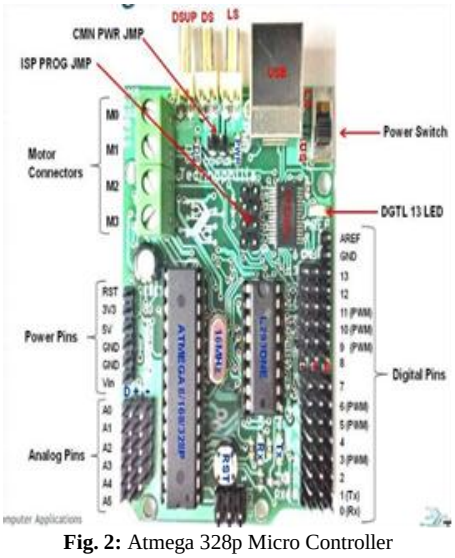

Fig. 2: Atmega 328p Micro Controller

3.3 Relay Board

Instead of manual movement of switch, relay is used to switch on and off by using an electromagnet. Besides consuming small amount of power relay can control those which draws more power. There are different configurations of relays. Generally used are shown below:

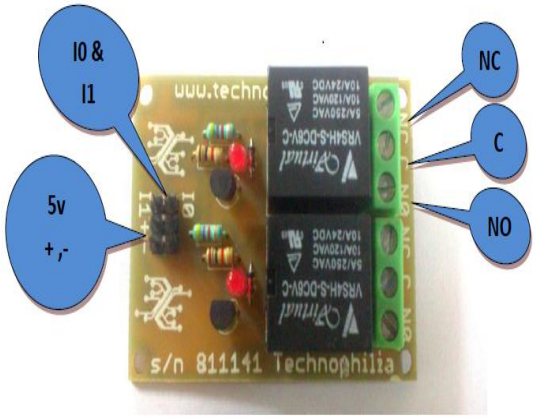

Fig. 3: Relay Circuit

The Relay connection is as shown in the figure below. Under unenergized condition com is connected to NC and when energized it moves to NO and thereby drives the motor through battery and closes the circuit.

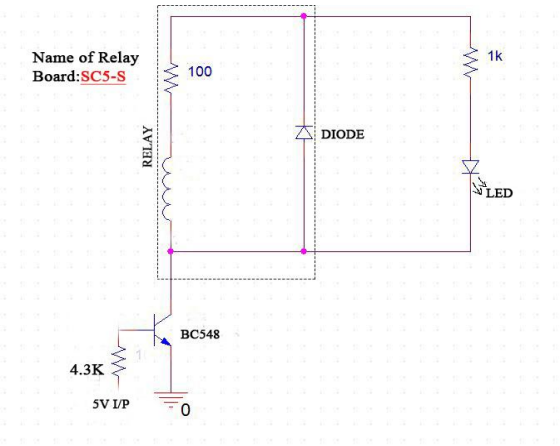

Fig. 4: Rely circuit diagram

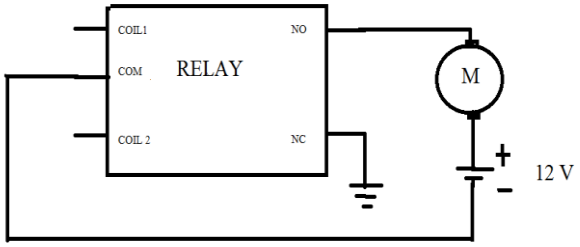

Fig.5. Relay Connection

3.4 Charge Controller Circuit

The battery charging can be optimized over a wide range by using automatic temperature compensation. The reverse polarity connection of both the battery and photovoltaic panel can be handled by SCC.
Simplicity, reliability, efficiency and usability of field replaceable parts are the main design goals of this circuit. The circuit is suitable for ham radio applications as it is designed to be radio-quiet. A SCC3, a 12V (nominal) solar panel that has 20 amps rating, and a lead acid or any other rechargeable batteries that has ratings from 500 milliamp hours to 400 amp hours of capacity is used to build a medium powered solar system. Solar panel's current rating should be matched with battery's amp-hour rating (C).
Battery manufacturer's data sheets should be checked to know the maximum allowable charge current. According to this value a PV is selected so that it doesn't exceed the charge current value. Besides this if output of solar panel is too low the battery will never get fully charged.

3.4.1 Working of Solar Charge Controller

The circuit activation section uses op-amp IC4 wired as a comparator to switch power on for the rest of the SCC. When the PV voltage is greater than the battery voltage, IC4 turns on and sends power to voltage regulator IC3.



Fig.6: Solar Charge Controller

Diode D2 prevents damage to IC4 if the battery is connected with reverse polarity. IC3 produces a regulated 5 Volt power source. The 5V is used to power the SCC circuitry, it is also used as a reference for the battery float voltage comparator IC1a
The battery voltage is compared (divided by R1/VR1 and R3 to standard voltage 5v (divided by R5 and R6) by the voltage comparator IC1. During the temperature compensation of the thermistor TM1 the comparison point will be at offset. The equalize switch S1, R2 modifies the comparison point. If float voltage setting is above the battery voltage then output of IC1a raises high (+5v). If the float voltage setting is below the battery voltage the output falls low Charge/idle signal which controls the rest of the circuit is provided by this. This charge/idle signal is sent to a D-type flip-flop pair (IC1a and b) IC1b phase shift clocks oscillator which runs at 150Hzs clocks the flip-flops. Square wave charge/idle signal (which is synchronized with frequency of clock oscillator) is produced by the output of flip-flops which is caused by clocking .Two parts of IC2 operates in synchronization, the PV current switching circuit is driven by IC2a, the charging state indicator LED is driven by IC2b (i.e. changing red (charging) or green (floating)) The bipolar transistor Q1 and Q3 switches alternately by the latched signals from flip-flop IC2aThe gate of MOSFET Q2 is pulled to ground by Q1,this helps in switching \on the solar current through battery The base of Q4 is pulled to ground by Q3, the gate of Q2 is pulled towards PV+ line by Q4, solar charging is stopped by turning Q2 off. On the schematic the solar charging current flows through heavy lines. Discharging of the battery through the reverse biased IRF4905 MOSFET during nights is stopped by the diode D1, during short across PV lines the circuit is protected from the high reverse currents by the diode D1. If the diode D1 needs to be shorted out fuse F1 protects the circuit from possible high battery currents.

3.4.2 Features and Specifications of SCC

- Efficient design is suitable for use with low to medium power solar panels and solar arrays.
- Will work with most rechargeable battery types: Lead Acid (wet or gell), NiCd, NiMH and NiFe.
- Compatible with monocrystalline, polycrystalline and amorphous PV panels.

- Common Negative Ground for Solar Panel and Battery.
- Built in fuse for short circuit protection, load circuitry requires its own fused disconnect.
- Capable of withstanding reverse battery and reverse G_{PV} connection.
- (90m a -20A Short Circuit Current).
- The voltage drop during the time of charging: 0.4v@ 10A, 1V@18A.
- The range to adjust the float voltage is:12V-14.5V(the range can be altered)

The float voltage variation during the time of charging: +/ - 0.02V
Increase in equalized mode voltage: 0.99V
Temperature Compensation for Charge Controller: - 7.32mV/°C.
Drain in battery current during night time: 0.6 - 1.9ma.

- Fuse Type: 19 Amp automotive fuse.

3.4.3 Battery

The usage cost of rechargeable batteries are low and even the impact on environment by them are also less when compared to batteries which are disposable. Few rechargeable batteries are available in size of regular batteries which are disposable. initially the cost of rechargeable batteries are high but on long run they can used again and again by recharging them without any expense.

3.4.5 Charging and discharging

DC voltage source has to be connected in order to store energy in secondary cell. The negative and positive terminals of the source need to be connected to respective negative and positive parts of the cell. The source output voltage should be higher than the battery voltage, and the edifference in voltages should not be a great value. The difference in voltages is proportional to the rate at which the battery gets charged. There is even a greater risk of overcharging and damaging the battery
Batteries take minutes to hour to get charged by chargers. Cells get charged in few hours ranging from two to five by rapid chargers whereas few take approximately fifteen minutes to get charged which depends on model

3.4.6 Usage and applications

The traditional rechargeable batteries needed to be charged before using them. newer low self-discharge NiMH batteries can hold their charge for several months, and they are charged at the factory to about 70% of their rated capacity. For load leveling grid energy applications uses rechargeable batteries. Mobile, laptops, phones, mobile power tools like cordless screwdrivers uses rechargeable batteries.

4. Schematic diagrams of Time-Lapse Solar Tracking System

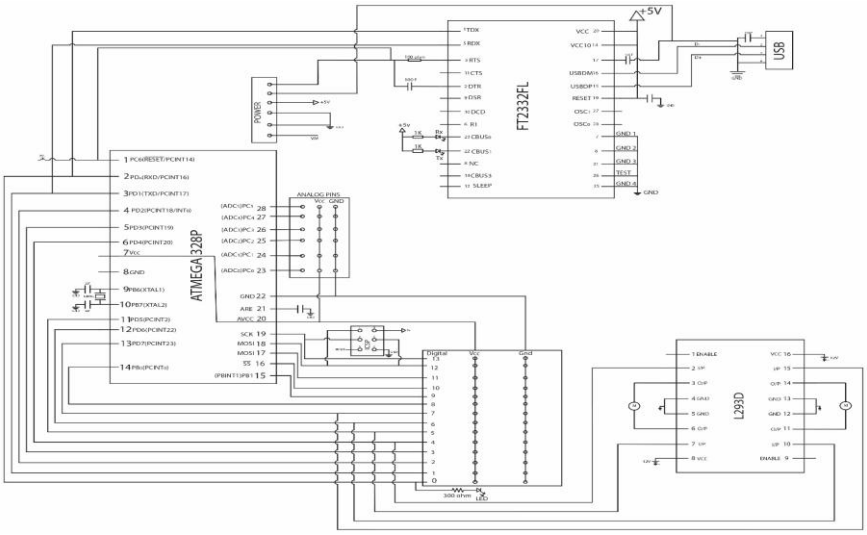

Fig. 7: IC2 schematic diagrams of time lapse solar tracking system

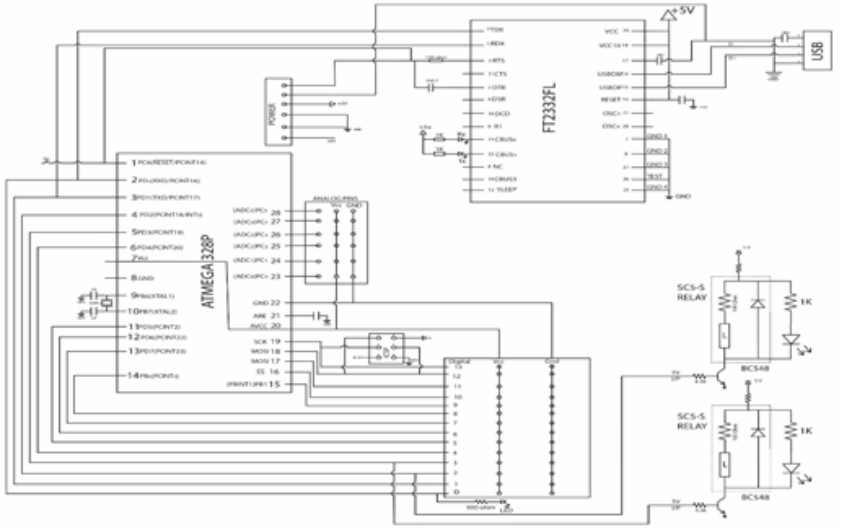

Fig. 8: Main relay schematic diagrams of time lapse solar tracking syste

5. Hardware & Software Implementation

The model is designed for two 10W panels. The structure is designed with a height of 5ft 4inches. At the vertex two branches are arranged which are designed in such a way that the panels are mounted on them. Holes are punched on the branch that gives the structure adjustable height. Below the panels the motors are fixed. The motors rotate through a chain mechanism as shown in the figures. The output pins from the arduino board (digital 8,9) are connected to the 2 channel relay board. The positive voltage and the ground terminals required for the relay board are tapped from the arduino which is having a voltage regulator.

The output pins of relay board NO, COM, NC. Under normal condition the terminals are connected to NC. So NC is connected to ground. The NO terminal is connected to the com terminal when relay gets energized. At this point DC motor gets connected with NO terminal through 12v. further the motor is driven depending on the program in the controller.. The shaft of the motor is connected to the panel which is fitted on the structure through the chain mechanism. The two panels are connected in the same fashion. Now when the program is executed the shaft of the motor moves and the chain rotates which ultimately changes the direction of the panel.

- The open circuit voltage of panel is 21v
- The short circuit current of panel is 0.66amp
- The voltage maximum power is 17v
- The current maximum power is amp
- The fill factor is $((V_{MP}*I_{MP})/(V_{OC}*I_{SC}))$s
- From the results FF is 0.71447

The Characteristics of solar Panel for Resistive load throughout the day at different
Temperatures and at different inclination angle of panel are studied and observed as

6. Results and Discussion

Well known that in a day as time changes the direction of these un changes and the intensity of the sun rays changes along with the direction of the sun. Normally the intensity of sun rays will be more in the mid noon than in morning and evening times. As the output voltage of the solar panel depends upon the intensity of the sun rays, the output of the solar panel will be high in mid noon than in morning and evening. The output of our solar panel can be shown in table and a graph is drawn between time and output voltage as:

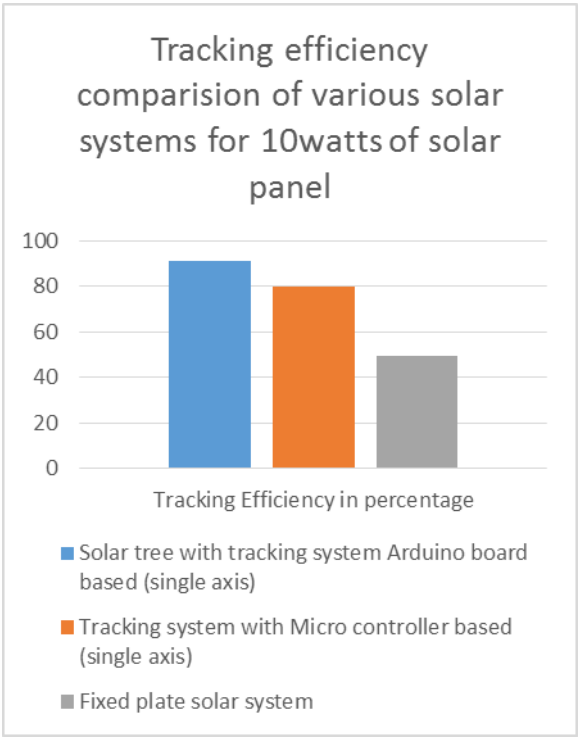

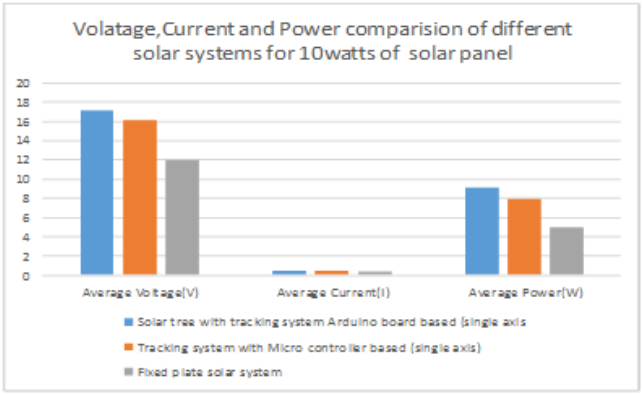

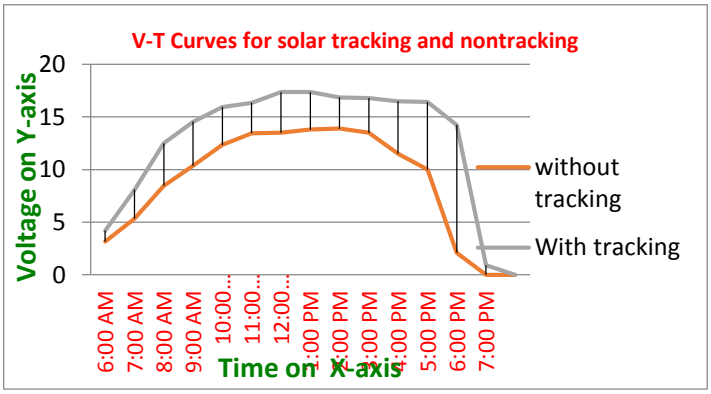

Fig. 9: Graph for voltage versus time for solar tracking and non-tracking.

Tabular column of various parameters

Parameter	Average Voltage(V)	Average Current(I)	Average Power(W)	Tracking Efficiency in percentage	Required space in square foot to install 4solar panel with with ″58×26″ in size
Solar tree with tracking system Arduino board based (single axis)	17.2	0.52	9.11	91.1%	1
Tracking system with Micro controller based (single axis)	16.1	0.496	7.966	79.6%	2
Fixed plate solar system	12	0.41	4.92	4.92%	2

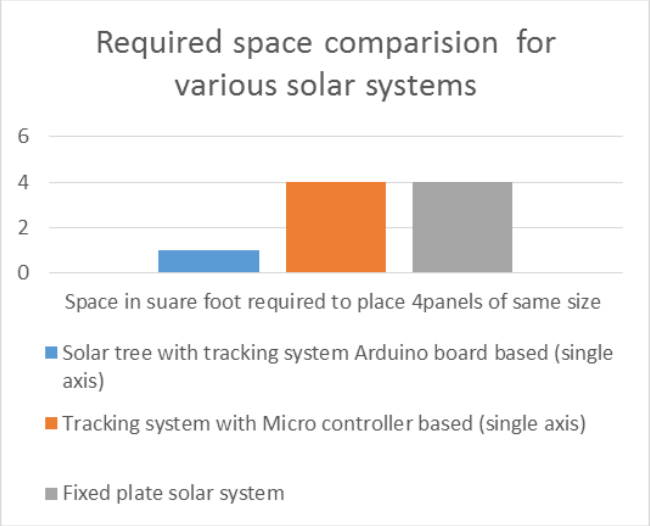

6.1 Result Analysis

The solar panels were being controlled through single axis and the results were taken on April 3, 2015.The analyzed result was for both single and fixed axis. The value of power was calculated and for 5 hours from 10:44 AM to 2:44 PM. It's observed that maximum power was obtained during 11:55 AM, morning and as time sets down the power generated goes on decreasing. The power generated was compared for fixed axis and dual axis and it is observed that the generated power was more in single axis than fixed axis. It is because the power in axis tracking the panel gets rotated to get maximum intensity and ultimately power generated is maximum. It is also observed that the voltage across the panels is always constant and as the intensity increases, the current increases, reaches a maximum and then decreases.

6.2 Tabular column of various parameters

6.2.1 Applications

- It is used for domestic purposes
- As here the height is adjustable, it can be placed anywhere
- It can be employed to generate power for an emergency lighting in household.

7. Conclusion

Usually the solar power for domestic purpose has panels laid on the roof top. These are fixed panels. But by mounting these panels on the branch like structure gives them flexibility. They can be adjusted to the required height and are portable [10]. From the above observations we observed that maximum intensity of sun light can be collected at east-west direction and at the inclination angle is equal to the altitude angle. The maximum temperature of the sun is maintained in between the 12'O clock to 3' O clock. If the inclination angle changes the output voltage will change.

7.1 Future Scope

So far solar tree is only with the panels in fixed position. We have developed the tree in such a way that it tracks maximum power through single axis for two panels. In the next era, there is a scope to increase the number of panels and track the same using single axis and also to perform the dual rotation of the panel which is much more effective than single axis. The structure of tree can be well built by modifying the branch shapes, the movement can be implemented effectively by changing the motors from DC motors to stepper motors. The generated system is based on time lapse and if the tracking is done through sensors it will be highly effective without relying on Sun's direction.



Fig. 10: Time Lapse Based Single Axis MPP Tracking System for Solar Tree front view



Fig. 11: Time Lapse Based **Single** Axis MPP Tracking System for Solar Tree back view

References

[1] Aronov D.M., Bubnova M.G., Ioseliani D.G., Krasnitsky V.B., Shovkun T.V., Novikova N.K., Yarnykh E.V.The Complex Program of Rehabilitation of Patients With Ischemic Heart Disease After Coronary Artery Bypass Surgery in Ambulatory Cardiorehabilitation Department: Clinical Effects of Third Stage of Rehabilitation. // Kardiologiya. 2017. T.57. №3. P.10-19. (in Russian) DOI: 10.18565/cardio.2017.3.10-19

[2] Puzin S.N., Achkasov E.E., Bogova O.T., Mashkovsky E.V. Cardiovascular system diseases in professional athletes. // Medico-Social Expert Evaluation and Rehabilitation. 2012. №3. P.55-57.(in Russian)

[3] Tancyreva I.V., VolkovaE.G., Levashov S.Yu., ShamurovaYu.Yu.Modeling of the 10-year survival of men 60 years and older, with ischemic heart disease.//Cardiovascular Therapy and Prevention. 2015. T.14. №4. P.22-28.(in Russian)DOI: http://dx.doi.org/10.15829/1728-8800-2015-4-22-28

[4] Benzer W., Rauch B., Schmid J.P. et al. Differences in Characteristics of Patients Referred to Cardiac Rehabilitation in European Countries. // European Journal of Preventive Cardiology 2013; 20: S1—S154
[5] Kristensen S, Laut KG, Fajadet J et al. Reperfusion therapy for ST elevation acute myocardial infarction 2010/2011: current status in 37 ESC countries. // Eur Heart J 2014; 35: 1957–70
[6] Sokolova N.Yu., Golukhova E.Z., Shumkov K.V., Kuznetsova E.V. Analysis of long term results of myocardial revascularization in patients with stable ischemic heart disease with a high level of treatment adherence. // Cardiovascular Therapy and Prevention**.** 2017. T.16. №4. P.25-30.(in Russian)DOI: http://dx.doi.org/10.15829/1728-8800-2017-4-25-30
[7] Mashkovskiy E.V., Bogova O.T., Achkasov E.E., Puzin S.N., Sjoderkholm L.A.Influence of sports history on the clinical and echocardiographic features course of coronary heart disease.// Sports medicine: research and practice: research and practical journal. 2013. №2. P.41-44 (in Russian)
[8] Benzer W, Rauch B, Schmid JP, Zwisler AD, Dendale P, Davos CH, et al. Exercise-based cardiac rehabilitation in twelve European countries results of the European cardiac rehabilitation registry. International journal of cardiology. 228 (2016)58–67. pmid:27863363
[9] Karmali KN, Davies P, Taylor F, Beswick A, Martin N, Ebrahim S. Promoting patient uptake and adherence in cardiac rehabilitation. // Cochrane Database Syst Rev. 2014 Jun 25;(6):CD007131. DOI: 10.1002/14651858.CD007131.pub3
[10] Volodina K.A., Linchak R.M., Achkasov E.E., Alaeva E.N., Thay N.V., Kopytov D.V. Effektivnost skandinavskoy hodby u pazhientov, pereneschsih ostriy koronarniy sindrom. // Cardiosomatics. 2017. T.8. №1. P.20. (in Russian).