International Journal of Engineering & Technology, 7 (4.41) (2018) 110-112

International Journal of Engineering & Technology

Website: www.sciencepubco.com/index.php/IJET

Research paper



Design of Power Amplifier for UWB Radar

Viresh J. Dighe[1]*, Poornima Srivastava[2], Sreedevi Nair[3]

[1]Student M.E. EXTC, FCRIT Vashi, Navi Mumbai Maharashtra INDIA
[2]Scientist-E ARID SAMEER IIT MUMBAI Maharashtra INDIA
[3]Assistant Professor EXTC Dept. FCRIT Vashi Navi Mumbai Maharashtra INDIA
**Corresponding author E-mail:vireshdighe@gmail.com*

Abstract

This paper discusses the design of the power amplifier for UWB Radar. The power amplifier design is one of the important aspect of the UWB Radar as it helps in increasing the transmission range. The impedance matching is done by stub matching. The design of the power amplifier is done by using ADS software. The design frequency for the power amplifier is 6 GHz. The reason for choosing 6 GHz as design frequency is less rain fade in the communication channel, the larger bandwidth available at cheaper price. The bandwidth of 1.5 GHz is chosen so as to satisfy the FCC requirement of bandwidth to be greater than or equal to 0.25 times of center frequency. The UWB technology is used in various applications such as through-wall detection, airport-surveillance, obstacle detection.

Keywords: *ADS; Power Amplifier; UWB*

1. Introduction

The UWB frequency range is from 3.1 to 10.6 GHz, used for high data rate transmission. In UWB frequency band pulses with large bandwidth (≥ 500 MHz) can be transmitted over short range without any interference. For same range to be covered the power transmitted is less in UWB radar as compared to conventional radar. The minimum bandwidth to be covered in UWB technology is 20% of the center frequency. [7]

The antennas used in UWB radar are unidirectional antennas. The unidirectional antennas are used because so as to transmit maximum power in one direction. The antenna used is horn antenna. Horn antennas are used as they have high directivity and gain. Antennas have small size as they have to transmit less power as compared to conventional radars. The advantage of horn antennas are as follows: - high gain, wideband, and low power loss. Also, the horn antennas are highly directional antennas. [7]

The power amplifier design is one of the important aspect in the RF system design. The power amplifier should be stable in the frequency range it should amplify the input signal. The impedance matching can be done using two ways lumped matching and distributed elements. Power amplifier is a device that works on basic principle of converting the DC power taken from power supply into AC power that is delivered to the load. RF power amplifier is used as end device in RF transmitter system.

There are four classes of power amplifier namely Class A, Class B, Class AB and Class C. Class A has the least efficiency while class C has the maximum efficiency. The amplifier designed in this paper operates as class A Amplifier. The reason for selecting class A amplifier is the requirement to operate the amplifier in the full cycle. [9]

Advanced Design System (ADS) is an Electronic Design Automation software which provides an integrated design environment to designers of RF electronic products such as radar systems, wireless networks, satellite communications etc.

The ADS software provides means of carrying out various simulation such as AC, DC, Harmonic, Transient and S-Parameter.

2. Design of Power Amplifier

The design specifications for the power amplifier are:-

1) Center frequency:- 6 GHz
2) Bandwidth:- 1.5 GHz
3) Gain:- ≥ 15 dB
4) Input & Output Return loss:- ≤ -15 dB

The power amplifier designed is cascaade of two stages.

The design of power amplifier includes two stages. 1) Device selection. 2) Bias Point Selection

2.1. Device Selection

According to design specification the devices selected are tim5964-4sl-422 and tim5964-16sl-422. It is necessary to have two stages in cascaded so that input power level to the final stage of the power amplifier is above the minimum power level required to drive the final stage.

The first GaAs FET has maximum output power of 4W and that of second GaAs FET has 16W.

2.2. Bias Point Selection

The bias-point selection is one of the most important concept in power amplifier design. The amplifier is biased such that the amplifier operates as class-A amplifier. The DC bias conditions for 4W FET are VDS=10V and ID=1.1A and 16W FET are VDS=10V and ID=4.4A.
The frequency range of the GaAs FETs is from 5.85 GHz to 6.75 GHz. The minimum gain provided by individual stages is 8dB.

Copyright © 2018 Authors. This is an open access article distributed under the Creative Commons Attribution License, which permits unrestricted use, distribution, and reproduction in any medium, provided the original work is properly cited.

The IDSS and Vp values should be chosen such that they should be less than maximum electrical characteristics.
Active biasing network is used to bias the GaAs FETs in amplifier region. The active biasing network is used to increase stability in the network.

Active biasing network is the network in which the biasing of device under test is done with the help of active components such as diode, Bipolar Junction Transistor (BJT), Field Effect Transistor (FET). While the passive biasing is done with help of resistive networks.

The passive biasing network cannot be used in RF circuits as the parasitic reactance of the passive components used affects the Q-point of the RF device for which bias circuit is designed.

2.3. Impedance matching

Impedance matching technique is one of important aspect in the power amplifier design. It helps in minimising impedance mismatch at source and load side and helps in transfer of maximum power from source to load.

There are two ways in which impedance matching can be done. One way is lumped element matching while other way is distributed element matching.

In impedance matching we find the component values of inductor and capacitor at load and source side. Thus, matching network consists of lumped elements while in distributed element matching the microstrip components are used for matching network.

In this design of power amplifier, the impedance matching network used is distributed elements matching. The impedance matching done by using distributed elements is more stable than impedance matching design done by using lumped elements. This is because in lumped element matching the effect of change of frequency is more visible in the change of response of circuitry. [10]

3. Simulation results

The biasing of GaAs FET is accomplished as follows
For correct operation of the GaAs FET negative voltage is applied to gate terminal and positive voltage is applied to drain terminal i.e. VDS should be positive and VGS should be negative. The gate terminal is biased using potential divider network while drain is biased using current mirror circuit. The biasing diagram for 4W GaAs FET is shown below in fig.1

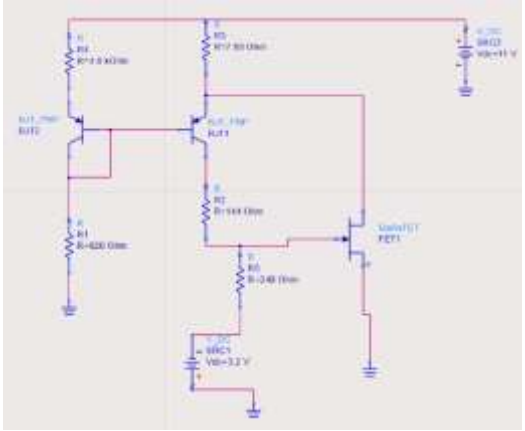

Fig. 1: Biasing Diagram for 4W GaAs FET

Same principle is used for 16W GaAs FET biasing. The only difference is change in the component values due to change in biasing conditions.

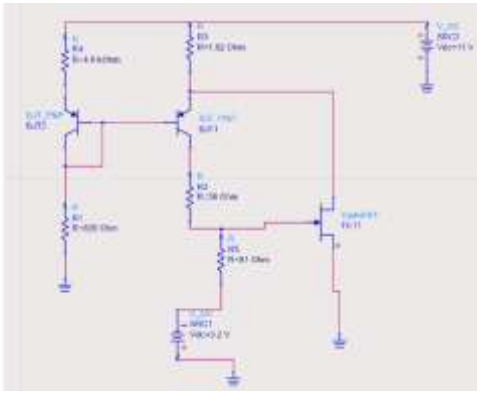

Fig. 2:Biasing Diagram for 16W GaAs FET

The simulation diagram for Amplifier without isolator is shown below in the fig.3. The impedance matching is done with help of microstrip components such as MCROS and MSTUB.

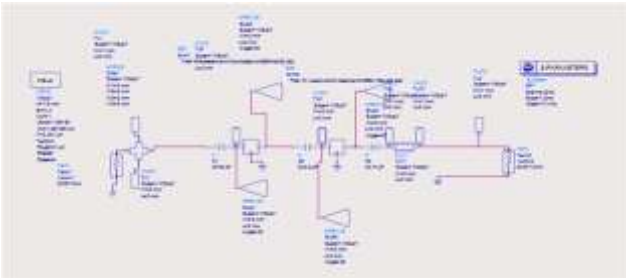

Fig. 3: Simulation diagram for Power Amplifier circuit without isolator

The gain obtained in the simulation without isolator is 13.774 dB at 6 GHz and a bandwidth of 290 MHz. The gain and bandwidth obtained are less than the desired values to be achieved as shown in fig. 4.
The simulation of the power amplifier is done in the ADS Software.
As the devices selected for the power amplifier design are not available in the component library of ADS software the simulation was carried out using S2P files for respective GaAs FET devices.
The S2P files contain the S-Parameter response of the devices over the frequency range. The gain obtained in the simulation is 17.989 dB. The simulation diagram of power amplifier is below in fig. 5.

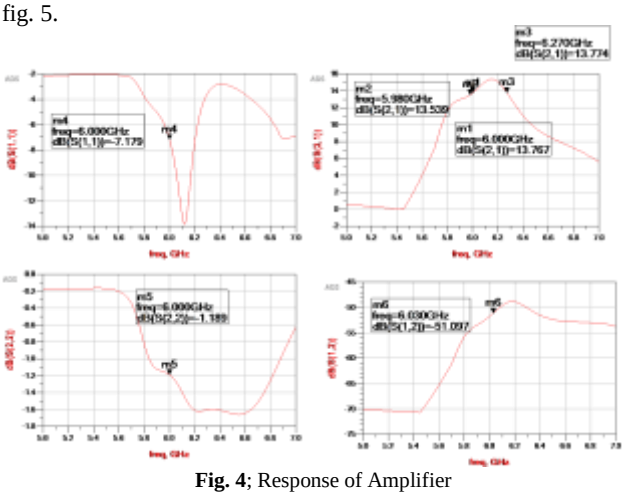

Fig. 4; Response of Amplifier

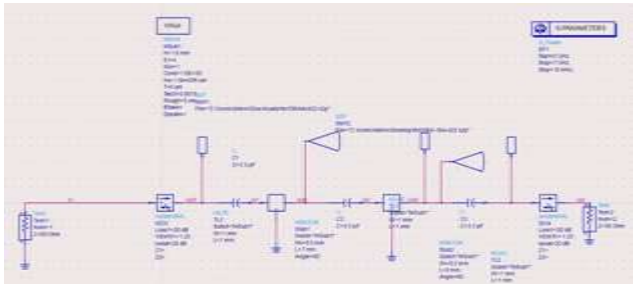

Fig. 5: Simulation Diagram of Power Amplifier circuit with Isolator

In the above figure the isolators are used to reduce the reflections both at the input and output side. This helps to achieve much wider bandwidth. The isolators are the RF components which help in improving the matching of the circuit.
The figure below shows the variation in input reflection coefficient

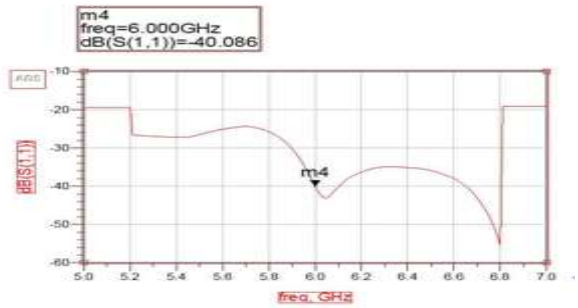

Fig. 6: Input Reflection Coefficient

The input reflection coefficient specifies the amount of power reflected back to input port. It is denoted by S11. The value of S11 should as less as possible. The value of S11 is -40dB as shown in fig. 6
The output reflection coefficient specifies the amount of power reflected back to the output port. It is denoted by S22. The value of S22 is -24.5 dB as shown in fig. 7

The bandwidth of power amplifier is defined as range of frequencies over which the gain of amplifier remains constant or reduces by 1dB from maximum value. The wide bandwidth is obtained by varying the dimensions of radial stub.
Thus, the bandwidth achieved is 1.5 GHz with center frequency of 6 GHz as shown in fig.8

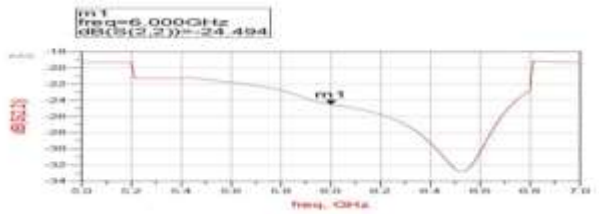

Fig. 7: Output Reflection Coefficient

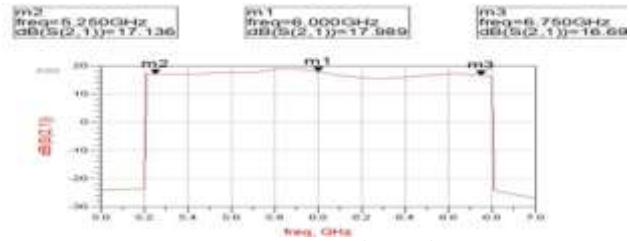

Fig. 8: Gain response of Amplifier

4. Conclusion

The power amplifier was designed for UWB Radar at 6 GHz center frequency. The bandwidth achieved is of 1.5 GHz and gain obtained is 17.989 dB.

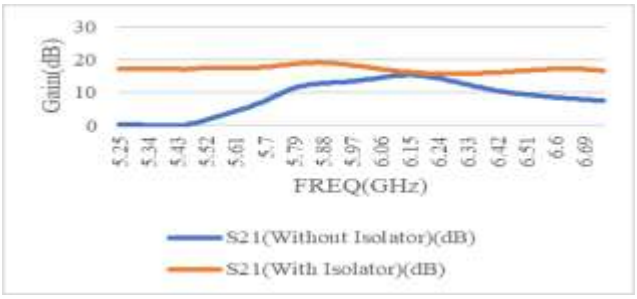

Fig. 9: Comparison of gain with and without isolator.

	Gain	Bandwidth
Without isolator	13.774dB	290 MHz
With Isolator	17.989	1.5 GHz

References

[1] D. M. Pozar "*Microwave Engineering"*, New Delhi, Wiley India, Pvt. Ltd. 2014

[2] M. I Skolnik, *"Introduction to Radar Systems"*, Mcgraw Hill Education (India) Pvt. Ltd., 2013.

[3] Ravikumar S., Nagendra N, M. Kothari " Design and Simulation of 4W RF Power Amplifier for LTE band 28" 2017 *International Conference on Intelligent Computing and Control.* pp. 1-5

[4] Mamoru Akimoto, Tokio Taga "Characteristics of Bidirectional Printed Dipole Antenna". vol-1 1996 *Proceedings Vehicular Technology Conference* pp. 357-361

[5] Ariunzaya Batgerel, Soon Young Eon, Laxmikant Minz, Joung Myoun Kim,Jae Ick Choi, "High Gain Bidirectional Microstrip Antenna" 2011 *International Conference on Ultra-Wideband* (ICUWB) pp. 21-24.

[6] Wang Yao, Wei Li, Zhiyong Luo, Junyan Ren "Noise Figure in UWB Systems" 2007 *International Conference on ASIC.* Pp. 364-367

[7] E.Levine, H. Matzner, "A Relatively Flat Dual-Horn Antenna" 2017 *International Conference on Microwaves, Antennas, Communication and Electronic Systems.* pp. 1-4

[8] H.Erl, J.W.Kolar, F.C.Zach, "Basic Considerations and topologies of switched mode assisted linear power amplifiers" vol.1 1996 *Applied Electronics Conference and Exposition.* pp. 207-213

[9] Yuan Zhuang, Zhouxiang Fei, Anqi Chen, Yi Huang and Jiafeng Zhou "Distributed Matching Network Design for Broadband Power Amplifiers" 2017 *IEEE Electrical Design of Advanced Packaging and Systems Symposium.* pp. 1-3