International Journal of Engineering & Technology, 7 (4.41) (2018) 83-85

International Journal of Engineering & Technology

Website: www.sciencepubco.com/index.php/IJET

Research paper



Energy Generation using Magnetic Repulsion

R. Shivarudra Swamy[1]*Jayalakshmi.N.S[2], Mohit Kumar[3] Ujawal[4]

Department of Electrical & Electronics Engineering
MIT, Manipal University Manipal-576104, INDIA
**Corresponding author E-mail: shivarudraswamy.r@manipal.edu*

Abstract

This paper proposes a novel technology to convert the magnetic repulsive force available from permanent magnets to electrical energy using repulsion magnet technique. The proposed technology employs the theory of magnetic repulsion to generate the electricity. The system uses permanent magnets to produce repulsion and this repulsive force produces a torque, which drives a DC generator. The repulsive magnetic V channel consists of repulsive magnetic line of forces. The two channels repel each other, which create a force in the forward direction. The bullet magnet that is used is inserted into the channel and passed through a repulsive barrier and ultimately is placed in the repulsive part of the magnetic _field lines that shoots the bullet in forward direction. A belt coupler is coupled with the bullet and wrapped in the rotor of the dynamo. The torque produced by the repulsive forces will ultimately drive the dynamo, which will result, to electricity generation. It is almost free energy as the energy input is quite low and efficiency will be very high. This model requires no electrical input and works only on the forces of nature.

Keywords: *Magnets, Neodymium, Repulsion, Energy Generation.*

1. Introduction

There is no free energy. Any electrical energy from solar cells, wind tides, geothermal energy and hydropower is only free after using some methods for electricity generation which requires initial infrastructural cost. Using these methods [2], Electricity is generated for sometimes and requires continuous process for continuous electricity generation. Conventional current sources are based on fossil fuels or secondary current sources, Nuclear power or electricity, which has resulted from what means for their driving force [1]. All the above sources of power suffer from disadvantages as the cause of pollution, transport or transmission over long distances to the point of use and costly to buy [3]. Thus, there is a need for a current source, which is to operate essentially without pollutant, essentially no external energy being required, and is easy to maintain.

2. Neodymium Magnets

a product and this relates to the magnetic flux output per unit volume [3] Letters after the grade often hint towards the maximum operating temperature (most probably
curie temperature) which range from M (up to 100 °C) to EH (up to 200 °C).N33M-N48M
The grades of the magnets are listed below.

- N30H-N45H
- N30SH-N42SH
- N30UH-N35UH
- N28EH-N35EH

3. Methodology

Harnessing magnetic repulsive energy require an efficient placement of magnets with analyzing the magnetic field lines and their effect with the magnet that is getting repelled. The placement of magnet is such that efficient magnetic repulsive force is created and the magnet that is getting repelled is coupled with a dynamo that is generating electricity because of the pull by the magnet. The hardware implementation requires a V-channel to be created and magnets are aligned at 45 degrees to the normal. The both channel is such that it is repelling each other. There has to be a repulsive magnetic field lines inside the channel. The magnets are aligned at North Pole facing each other at the same pole. The bullet magnet is inserted from the south pole in the magnets which creates a barrier repulsive force at the entrance of the channel. A small mechanical force just to break the barrier overcomes such repulsive force. Once the magnetic repulsive force is overcome, the north pole of the bullet magnet faces the repelling magnetic force lines, which shoots the magnet. Such force is being utilized here to drive the dynamo. The bullet magnet will be linked by a cable, which will be wrapped on the rotor of the dynamo. Once the bullet magnet is repelled, it will drive the rotor of the magnet which will ultimately create electricity.

Copyright © 2018 Authors. This is an open access article distributed under the Creative Commons Attribution License, which permits unrestricted use, distribution, and reproduction in any medium, provided the original work is properly cited.

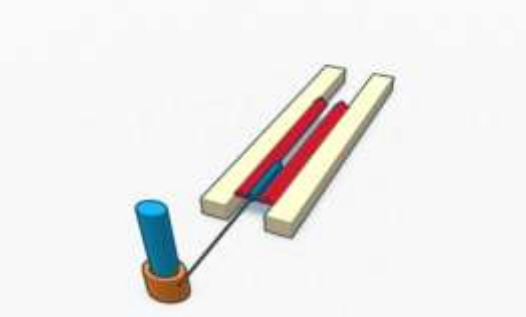

Fig 1: 3D Model of the prototype (1)

4. Simulation

Case 1.

In the case of the bullet magnet with similar polarity as of the V channel, the magnetic lines of forces are repelling the bullet from behind and there is no barrier in front of it, which will cause restriction. The repulsive force from behind will shoot the magnet in the forward direction and further magnets will accelerate its velocity. The magnetic density is shown in the Fig2 , and depicts the density of the magnetic field at different point on the system. The simulation result is shown in Fig 2

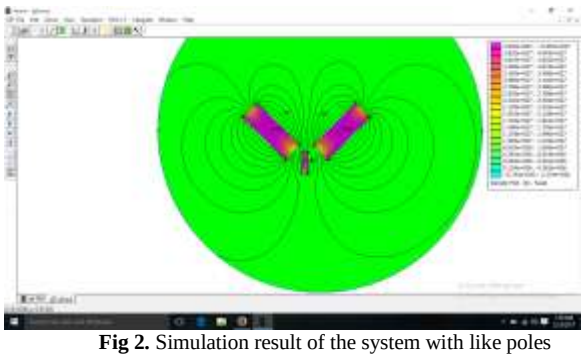

Fig 2. Simulation result of the system with like poles

Case 2

In the case of bullet magnet with opposite polarity as of the V channel, the magnetic lines of forces is pulling the bullet magnet in the reverse direction and is restricting the motion of the bullet in forward direction which ultimately will not run the system. The simulation result is shown in Fig 3.

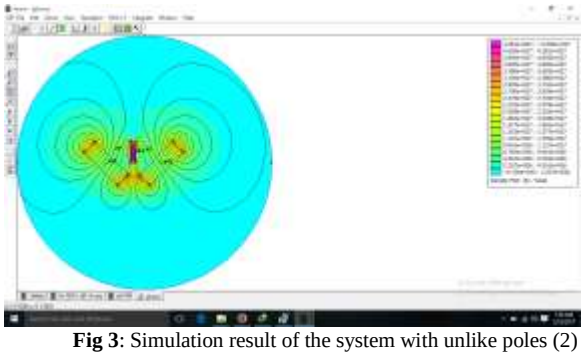

Fig 3: Simulation result of the system with unlike poles (2)

5. Results

Magnetic Field density(Gauss)	Magnetic Field density(Tesla)	length(mm)	Current	Voltage	Power output
57	0.0057	5	5.6mA	3.2V	18.88mW
112	0.0112	10	6.7mA	3.7V	24.79mW
163	0.0163	15	7.6mA	4.2V	31.16mW
209	0.0209	20	8.2mA	4.6V	37.72mW
260	0.025	25	11.1mA	5.2V	59.8mW

Fig 4: Table representing Magnetic Field Density and the corresponding power.

Fig. **4** shows the table that represents the magnetic field density and the corresponding power generated. The magnetic field density was found out using different amount of magnets and the length of magnets used.

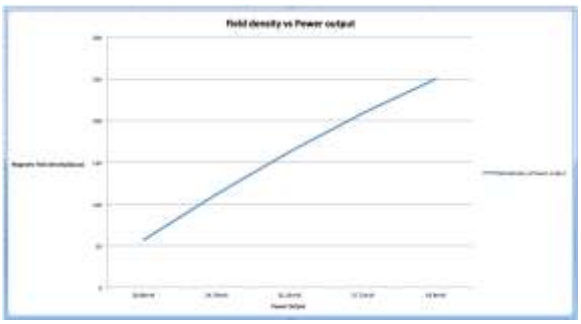

Fig 5: Field density vs Power output graph

The graph plotted depicts the relationship between the magnetic field density and power.
Tis graph can be used to find out the magnetic field density re quired to generate the required amount of power.

6. Harvesting Circuit

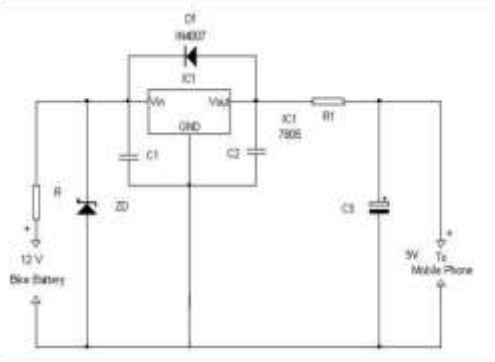

Fig 6: Energy harvesting circuit

The circuit is used for converting the variable output from the system to fixed output that will be used with the load as for the safe operation of any appliance or battery, a fixed output is required or the appliances can malfunction.

In this circuit a variable output from the dynamo is taken and fed to the zener diode [5] Zener diode acts as an input surge protecting diode. Diode D1 acts as the output surge protecting diode and the IC 7805 acts as positive voltage regulator in the circuit. Capacitors are used here to smoothen the waveform and filter out any ripples.

7. Merits

- It works in all weather conditions whereas a wind or a solar energy generator depends on natural phenomenon.
- Maintenance cost is very less, because once these magnetic generators are constructed they can operate for long durations of time without any problems.
- It is easy in construction.
- Space required for the installation is very less, thus these generators are suited for houses.

8. Demerits

- Magnetic field strength cannot be controlled.
- It is restricted to Ferro magnetic materials such as iron and steel, and cannot be used on austenitic stainless steel.
- The power generated is instantaneous and not continuous.

9. Conclusion

In this paper, by using concepts of generator and magnets and have tried to build a magnetic generator, which gives valuable amount of energy which can be used in household purposes. It is eco friendly and very economical for domestic purposes as it requires only one-time investment. Therefore, it can easily conclude that this idea is very revolutionary, innovative and productive. However it needs much more development instead of what has been done to it.

Acknowledgement

We thankful to Manipal Institute of Technology, Manipal for encouraging us to do this work and supporting us financially to presenting the paper in the conference/Journal publication

References

[1] Octave Fauchon-Villeplee Andre. Electric apparatus for propelling projectiles, July 11 1922. US Patent 1,422,427.
[2] Mayank Grover, B Lohith Kumar, and Isaac Ramalla. The free energy generator. International Journal of Scienti_c and Research Publications, 4(12):4{7, 2014.
[3] Ian R McNab. Launch to space with an electromagnetic railgun. IEEE Transactions on Magnetics, 39(1):295{304, 2003.
[4] M Azhagar Raj and V Meera. Prediction of lorenz force on the armature of magnetic railgun through parametric analysis. International Proceedings of Computer Science and Information Technology, 59:55, 2014.
[5] D. A. Weeks, W. F. Weldon and R. C. Zowarka, Jr., " plasma armature railgun launcher simulations at the university of texas at Austin" Fourth Symposium on Electromagnetic Launch Technology, Austin, IEEE Transactions on Magnetics, vol. 25, no. 1, January1989, pp. 580-586.
[6] Asghar Keshtkar, Toraj Maleki and Ahmad Keshtkar,"Determination of Optimum Rails Dimensions in Railgun by Lagrange's Equations", IEEE transactions on magnetics, vol. 45, no. 1, 2009, page: 594-598.
.