International Journal of Engineering & Technology, 7 (4.41) (2018) 55-59

International Journal of Engineering & Technology

Website: www.sciencepubco.com/index.php/IJET

Research paper

Design of Power Supply for RGB LED Based Lamp Source

Divya Shetty[1]*, Smit Dave[2] , Siddhant Shah[3]

[1,2,3]Dept. of Electrical & Electronics Engineering, Manipal Institute of Technology
Manipal Academy of Higher Education, Manipal, Karnataka, INDIA-576104
**Corresponding author E-mail: divya.shetty@manipal.edu*

Abstract

LED lighting is replacing the conventional lighting system at a very fast pace. RGB LED lighting fixtures offer convenient options of color changes to enhance our environment. The forward characteristics of Red, Green and Blue LED's indicate the region of control to produce acceptable level of light intensities. As the intensity of light produced by an LED is proportional to its forward current, a suitable region is identified to obtain distinctive colors and to explore the energy saving options. The objective of the paper was to provide a suitable control for dimming in the linear region as well as in the nonlinear region of the diode graph. The RGB LEDs have been powered from three push pull converters. Different control methods have been explored and simulated in PSPICE to switch the LEDs as to produce distinctive colors. Every method seems to have its pros and cons. Eventually Voltage mode control is adopted to provide control over the entire region of the diode graph which includes both linear and nonlinear regions which will serve the purpose of dimming. Accordingly, a multi-colored lamp source using RGB LEDs has been designed and the hardware has been developed.

Keywords: *RGB LEDs, Dimming, Push Pull Converter, Voltage Mode control.*

1. Introduction

As the intensity of light produced by an LED is proportional to its forward current, a suitable region has been identified to explore the energy saving options. Usually current mode control schemes are employed for the operation of LED's. The aim of the paper is to explore different methods of control for the operation of LED's and eventually adopt a suitable control for the entire region of the diode graph. The target is to provide a suitable control for the operation of the RGB LED's in the linear and the non-linear region of the forward characteristics of the LED's for the purpose of dimming. In this regard a prototype of 42W RGB LED based lamp source which uses 14 multi-chips RGB LED's powered by push-pull converters is developed for commercial lighting applications.

A typical voltage-current relationship for an RGB LED is shown in Fig1. The forward characteristics indicate the region of control for the leeway of multi-colors to be obtained. The graph of luminous flux versus forward current signifies a proportional relationship between them as shown in Fig1. White light is a combination of red, green and blue light. Red, green, and blue (RGB) are the primary colors of light. Mixing the colors will create new colors. As we mix more colors, the resultant is lighter color, leading to white. RGB finds it application in computer screen, TV, and electronic display device.

Dimming of LED's can be achieved using pulse width modulation. LED Drivers can also be used to enable color-changing or sequencing. This can be achieved by dimming a mix of colored LEDs in an array to change colors. Drivers with dimming capability can dim the LED light output over the full range from 100% to 0%. However, the paper employs high frequency dc-dc converters to power the RGB LED's and thus signifying the importance of dc-dc power converters as a favored option in driving high power LED's.

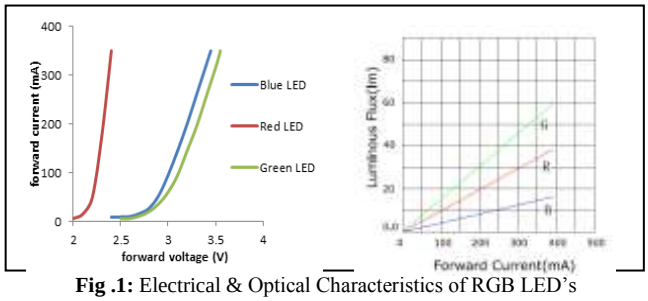

Fig .1: Electrical & Optical Characteristics of RGB LED's

In the PWM control, the output voltage is sensed using a sensor and fed back to be compared with the reference signal. The error generated is fed to a controller and the controller output is compared with a triangular signal. The comparator generates the pulse which will control the operation of the switch in the converter. By varying the duty cycle (turn on time) of the switch, the output voltage can be controlled and in turn we can control the brightness of the LED. There are two modes of control that are discussed below

2. Voltage-Mode Control

In this control the output voltage is sensed using a potential divider circuit and it is compared with the desired signal. The Error amplifier gives out the difference in the two signals and feeds it to the controller be it P, PI or PID. The controller output is compared with a ramp signal using a comparator which generates the pulses. The pulse width which represents the duty cycle is controlled thus regulating the output voltage. Fig 2. shows this approach.

Copyright © 2018 Authors. This is an open access article distributed under the Creative Commons Attribution License, which permits unrestricted use, distribution, and reproduction in any medium, provided the original work is properly cited.

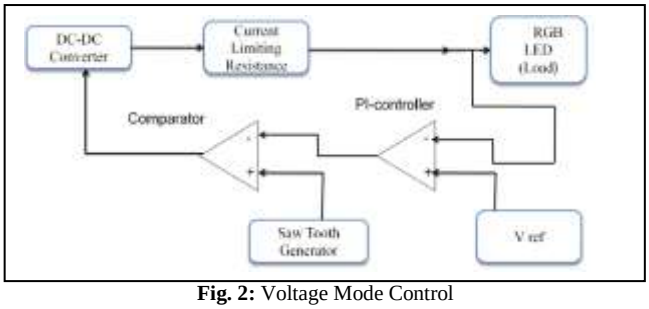

Fig. 2: Voltage Mode Control

3. Current Mode Control

In this control the voltage across a current-sense resistor is regulated which is directly proportional to the LED current as shown in Fig 3.Then the sensed current is compared with reference value and is amplified by the error amplifier EA. The final output acts as the reference of the current comparator. One of the advantages of using the current loop is inherent current limiting.

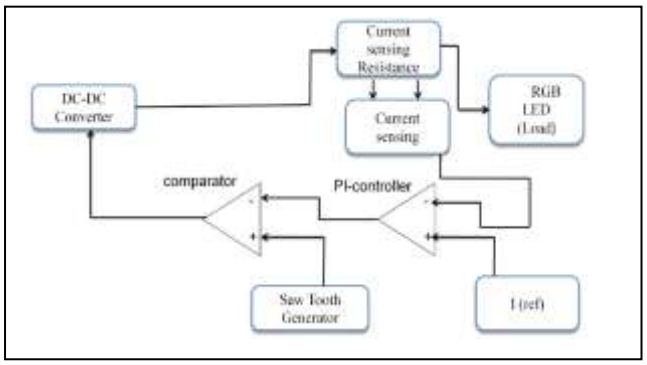

Fig.3: Current Mode Control

No additional circuitry is needed to sense the inductor current as it is already in place from the current feedback loop. The paper explores both current mode control and voltage mode control for the operation of RGB LEDs powered from push pull converter.
Based on the concepts described the importance of the high frequency dc-dc converters to be employed in driving of RGB LED's is understood. To drive the RGB LED's it is necessary to have three dc-dc converters; each for red, green and blue exploring the multi-color options.

4. Methodology and Implementation

As we are looking for a Multi-Color Lamp Source, the high power RGB LED's are used. They are available in common CATHODE or ANODE as shown in Fig.4. Edixeon RGB LED's were chosen for the load. The LED model selected was EDERTB-1EA1-AB16. The forward characteristics of the Edixeon RGB LED are shown in Fig. 1.

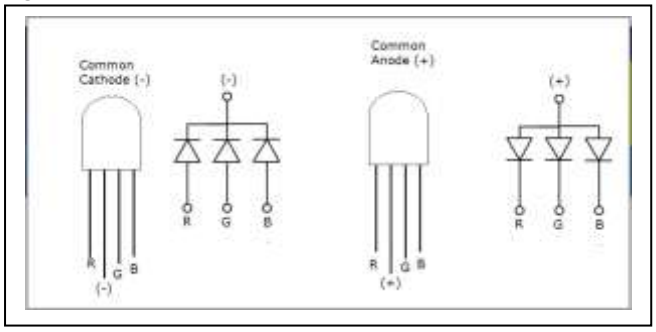

Fig. 4: RGB LED's in common CATHODE and common ANODE

The available standard AC voltage is 230V and the LED's require a lower DC voltage for operation. Hence, the AC voltage is stepped down and a diode bridge rectifier with a capacitor filter is used to get DC power for the LED's. To regulate the DC voltage given to the LED a high frequency dc-dc power converter is used. The control process is suitably employed to achieve required compensation and enable the stability of the system under varying circuit conditions. Similar set of three schematics is developed to drive the RGB LED's. A typical LED Driver comprises of the power source, power converter and a sensing device. Buck converter was the first choice but since LEDs are sensitive devices, isolation is required. For bucking action, commonly used isolated topologies are Flyback, Forward and Push-pull converters. Since Flyback and Forward converters utilize unidirectional core excitation, both these topologies were not preferred. Push pull which employs bidirectional core excitation is preferred. So the transformer can be significantly smaller, for the same power level. Furthermore, the switch drive circuits have a common point. Compared to the full bridge configuration, in push pull converter only one switch is turned on at a time which solves the problem of timing issues. Moreover, the push pull topology has been documented to have very high efficiencies. The parameters considered in the design of converter are the input voltage Vs, output voltage Vo, output current Io and output power Po. Since the loads to the converter are RGB LED's, an individual converter is required to drive the array of red, green and blue LED's separately. Therefore, three converters are developed depending on the forward voltages of RGB LED's and the pattern in which these LED's are connected. Since, 4-pin RGB LED's are used; the only method of connecting these LED's is two in series. Thus, the output voltage specifications for the converters are double the forward voltage.
The various parameters considered in the design of three converters to drive red, green and blue LED's are depicted in Table 1 below.

Table 1: Specifications of Push-Pull Converter for RGB LED's

PARAMETERS	RED	BLUE	GREEN
Input Voltage Vs	16-24-28V	16-24-28V	16-24-28V
Output Voltage Vo	4.4V	7V	6.8V
Switching Frequency fs	25kHz	25kHz	25kHz
Output Current Io(max)	350mA	350mA	350mA
Output Current Io (min)	3mA	3.3mA	4mA
Output Current Ripple	10%	10%	10%
Output Voltage Ripple	0.8%	0.8%	0.8%

4.1. Different Control Schemes

The different control schemes are simulated in PSpice and verified.

4.1.1. Current Mode Control Scheme (CMC)

The circuit schematic for the current mode control is shown in Fig.5. for Green LEDs. A similar approach is followed for the converters driving Red and Blue LED's. A current sense resistor is placed in the high line side of the LED load. The voltage across the current sense resistor is sensed by means of a differential amplifier. This sensed signal is compared with the reference voltage which is proportional to the desired current. The current mode control scheme proves to be a well-suited method for the operation of the LEDs in the useful operating area from the simulated results. But in our arrangement of LED's, the LEDs are connected in

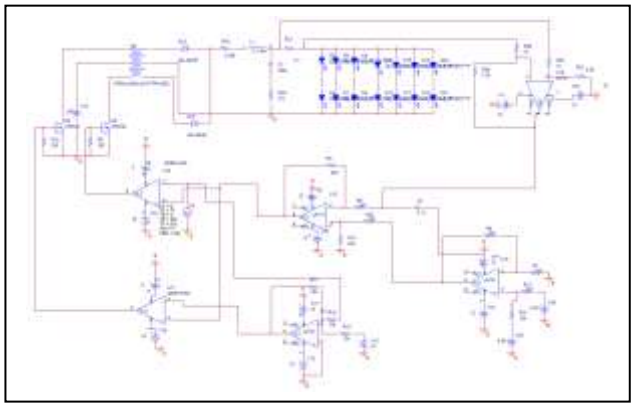

Fig. 5: Circuit schematic of CMC.

Parallel branches. In CMC we need to place a ballast resistor in each string which will lead to lower efficiency. So, we go for a combination of both current mode and voltage mode control in the next section.

4.1.2. Current Mode and Voltage Mode Control Scheme

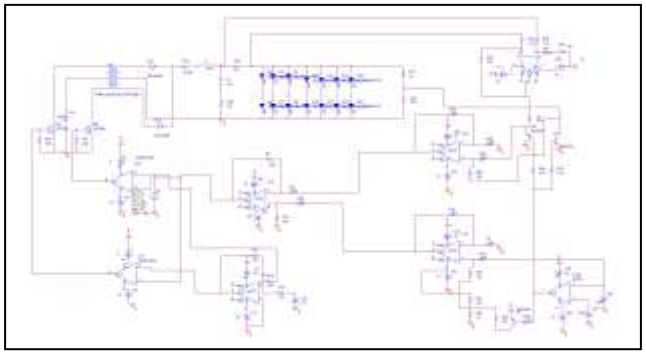

Fig.6: Circuit Schematic of CMC and VMC

It is evident that current mode control can be used for dimming purpose effectively. But in order to explore other approaches a combination of both the schemes was attempted. In this approach Current mode control scheme is restricted only to the nonlinear region of operation and Voltage mode control (VMC) is employed in the linear region of the diode graph. The circuit schematic is as shown in Fig 6.When the reference voltage is in the nonlinear region, the comparator turns on a transistor connecting the current mode control scheme. The voltage across the current sense resistor is sensed by a differential amplifier and compared with the reference which is done by the error amplifier. When the reference voltage is in the linear region, the comparator sends signals which turns off the transistor disconnecting the current mode control scheme. The transistor connecting the voltage mode control scheme is turned on. Now the voltage across the resistor in the potential divider is sensed and compared with the reference which is the voltage mode control method. Dimming can be done with this method but because of the complexity involved, this technique is not considered.

4.1.3. Voltage Mode Control Scheme (VMC)

The next approach is to go for voltage mode control to operate the LEDs in the useful operating area. Now both the nonlinear and the linear region of operation will be managed by only voltage mode control. This method was finalized for hardware design. So here the design steps are discussed in detail and it is finally shown that voltage mode control suffice the operation of the LEDs in the useful operating area. The three Push-Pull dc-dc converters required to drive the RGB LED's are simulated for Transient analysis in PSPICE for the open loop conditions to verify the design constraints as discussed in Table 1.

For closed loop, PI controller is adopted which provides zero steady state error with respect to a step input.

$$\frac{U(s)}{E(s)} = K_p + \frac{K_I}{S} \quad (1)$$

Where Kp is the proportional gain and Ki the integral gain.

For a type 1 PI controller,

$$\frac{U(s)}{E(s)} = -\frac{\frac{1}{sC}+R_2}{R_1} = -\left(\frac{R_2}{R_1} + \frac{1}{SCR_1}\right) \quad (2)$$

$$V_O = \left(\frac{R_2}{R_1}\right)V_e + \left(\frac{R_2}{R_1}\right)\frac{1}{R_1 C}\int_0^t V_e\,dt + V_O(0) \quad (3)$$

A simple Type 1 PI controller is shown in Fig.7. The output voltage is observed for different variations in input voltage and changes in the load. The PI controller is robust enough to maintain the output voltage constant in both the cases. All the parameters required for the closed loop conditions are designed and tested for different load variations and circuit conditions. The complete circuitries involving the push-pull converter with controller to drive Green LED's is shown in the Fig 8.

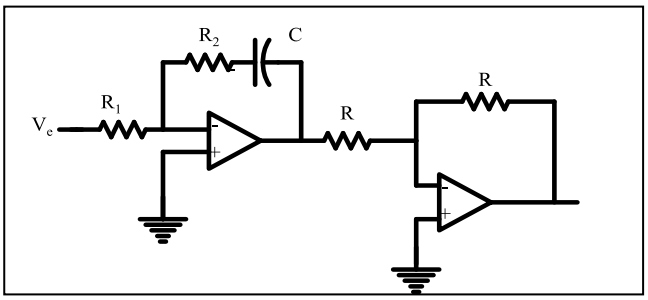

Fig. 7: Type 1 PI controller

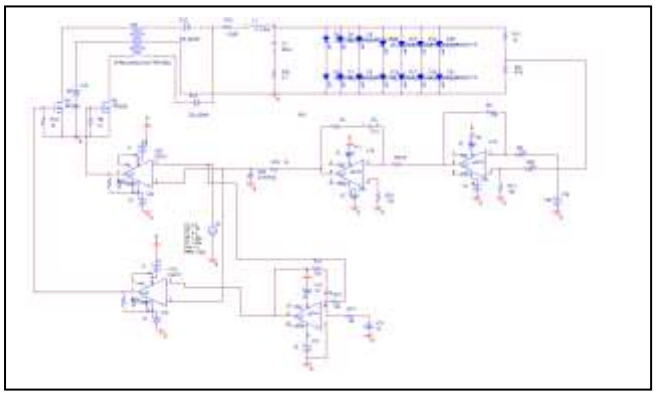

Fig. 8: Circuit Schematic of VMC.

The output voltage is sensed and is compared with a reference voltage. The differential error amplifier gives the difference between the two voltages as error signal. The PI controller outputs the error signal to the comparator. The error and the ramp signals are compared by the comparator which generated pulses to the MOSFETs. The ramp has a frequency of 25 kHz same as the switching frequency

5. Result Analysis

5.1 Simulation Results

The simulation results are shown for Green LEDs in Fig.9, Fig10 and Fig 11. The results obtained match with the design constraints. Similar waveforms are observed for Red and the Blue LEDs as well. The results of the closed loop conditions for converter driving Red and Blue LED's designed are also verified.

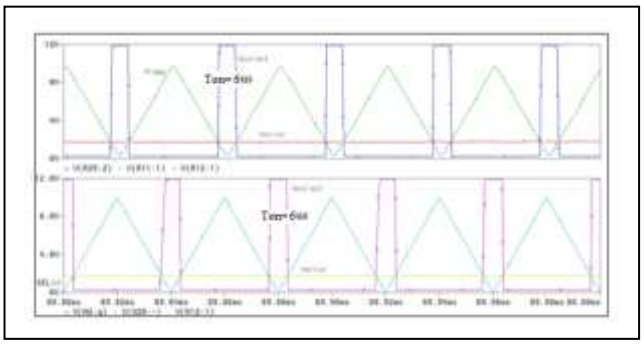

Fig. 9: Gate pulses, Ramp signals and the Error signal

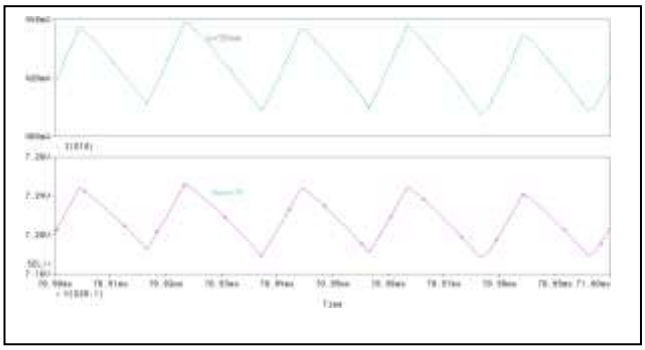

Fig.10: Output voltage and output current of Green LEDs in the linear region

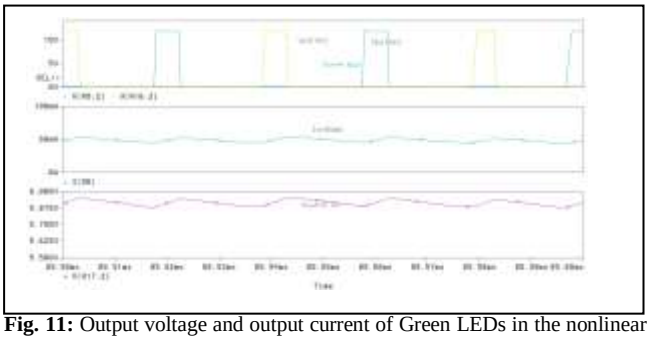

Fig. 11: Output voltage and output current of Green LEDs in the nonlinear region of operation

5.2 Hardware Results

The voltage mode control scheme as discussed is executed using various simulation tools and demonstrated by developing a suitable hardware unit. To accomplish the objectives, the paper headed at the development of a 42W RGB LED based lamp source powered by three push-pull converters with voltage mode control. The hardware results obtained validate the method of control for the operation of LED's in the useful operating area of the forward characteristics which is the nonlinear and linear region of the diode graph. The Fig 13 shows the hardware setup in the lab.



Fig. 13: Hardware setup

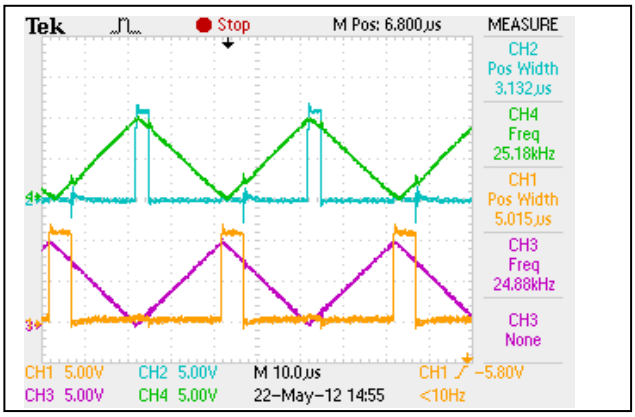

Fig. 14: PWM Pulses for push pull logic

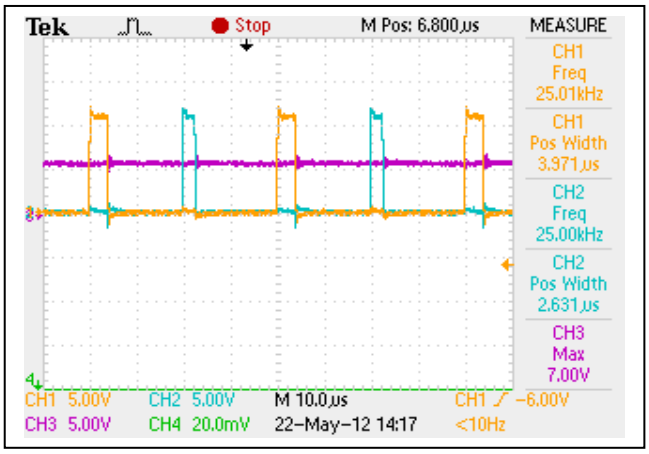

Fig. 15: Output voltage and the PWM Pulses for Green LEDs

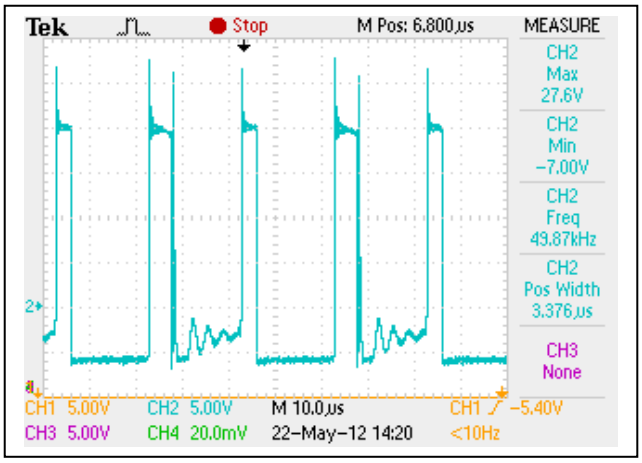

Fig.16: Inductor voltage

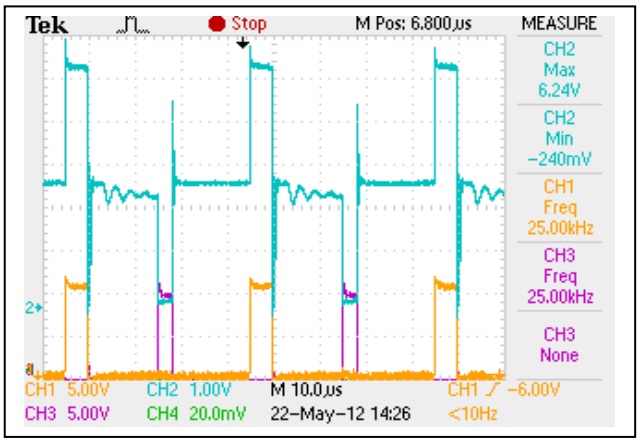

Fig.17: Drain to source voltage

6. Conclusion

The work targeted the entire region of useful operating area in the forward characteristics of RGB LED's. During the course, the paper has explored several control schemes to attain dimming. The work took shape by utilizing various simulations tools and then spawned to existence by development of a suitable hardware unit. The results obtained validate the proposed notion of commercial lighting. These results are persuasive with the design constraints of the push-pull converters aimed at driving the RGB LED's. The hardware results are also conclusive towards the projected objectives of the work. These results signify the prominence of the proposed concept being valid. The option of making the driver more sophisticated can be looked into in the future to incorporate ease of use. Higher switching frequencies allow the use of smaller passive components. A modern LED driver intended for portable applications should be able to switch at frequencies of up to 1 MHz, so the future work may consider higher value of switching frequency to reduce the size. Although the push-pull converter used to power the RGB LED's have a numerous advantage; the source current is discontinuous. The utilization of the source being poor affects the power factor and hence a different high frequency dc-dc topology could be explored in future space.

Acknowledgement

We would like to extend heartfelt gratitude to our project guide late Mr Harish Padiyar, Senior Scale Assistant Professor, Department of Electrical and Electronics Engineering, Manipal Institute of Technology. He was ever ready to give suggestions and ideas to our work. We would also like to thank Mr.Vishnu Prasad for his valuable time in helping us with the hardware setup.

References

[1] Laszlo Balogh, "Design and Application Guide for High Speed MOSFET Gate Drive Circuits", Texas Instruments
[2] "Application Note: Thermal Management of Power LED", Dominant Semiconductors
[3] "Thermal Management", CREE
[4] Stephen Johnson, "LEDs-An Overview of the State of the Art in Technology and Application", IEEE Transactions on Industry Applications, Vol: Ia-19, No: 5, September/October 1983
[5] Abraham I. Pressman, "Switching Power Supply Design", McGraw Hill, Second Edition, ISBN 0-07-116707-2
[6] Arturas Zukauskas, Micheal S. Shur, Remis Gaska, "Introduction to Solid State Lighting", Wiley-Interscience Publication, ISBN 0-471-21574-090000
[7] Daniel W. Hart, "Introduction to Power Electronics", Prentice Hall International Editions, ISBN 0-13-180415-4
[8] E Fred Schubert, "Light Emitting Diodes", Cambridge University Press (June 2006), ISBN 978-0-5218-6538-8
[9] L. Umanand, S. R. Bhat, "Design of Magnetic Components for Switched Mode Power Converters", New Age International (P) Limited, ISBN 81-224-0339-5
[10] Ned Mohan, Tore M. Undeland and William P. Robbins, "Power Electronics- Converters, Applications, and Design", John Wiley & Sons, Second Edition, ISBN 9971-51-177-0
[11] Sameer Ram Pujari "Application of Push Pull Converter for RGB LED based Commercial Lighting Systems", PESC, MIT, M.Tech Thesis 2011
[12] Ragasudha, "Design and Development of Energy Efficient Multicoloured LED Lamp Source Using RGB LED's", PESC, MIT, M.Tech Thesis 2010
[13] Robert W. Erickson, "Fundamentals of Power Electronics", Springer Publications, Second Edition, ISBN 81-8128-363-5
[14] Steve Winder, "Power Supplies LED for Driving", Elsevier Newness Publications, ISBN 978-0-7506-8341-8