International Journal of Engineering & Technology, 7 (4.40) (2018) 5-10

International Journal of Engineering & Technology

Website: www.sciencepubco.com/index.php/IJET

Research paper



A Simple Metabolic Flux Balance Analysis of Biomass and Bioethanol Production in *Kluyveromyces Marxianus* ATCC 26548 Batch Culture

Mohamad Fahrurrazi Tompang[1,2], Khairiah Abd Karim[1]*, Azlina Harun @Kamaruddin[1], Ku Syahidah Ku Ismail[2,3]

[1]School of Chemical Engineering, Universiti Sains Malaysia, Engineering Campus, 14300 Nibong Tebal, Pulau Pinang, Malaysia
[2]School of Bioprocess Engineering, Universiti Malaysia Perlis, Kompleks Pusat Pengajian Jejawi 3, 02600 Arau, Perlis, Malaysia.
[3]Centre of Excellence for Biomass Utilization, Universiti Malaysia Perlis 02600 Arau, Perlis, Malaysia
**Corresponding author E-mail:chkhairiah@usm.my*

Abstract

The role of a non-conventional yeast, *Kluyveromyces marxianus* in the bioprocessing industry has shown potential as metabolites producer, making it a suitable candidate for replacing the baker's yeast for various industrial applications. The mathematical approach is used to analyze the flow of metabolites in the biological system in order to improve the desired product yield as well as the overall production process. Thus, the development of a simple model could lead to sustainability and practicability of the process. In this study, the comparative analysis of a simple metabolic network and a black box description is carried out in order to evaluate the growth and bioethanol production in *K. marxianus* batch culture. Metabolic flux balance methodology has shown to give a more accurate estimation with the complete analysis of the reaction rates. Furthermore, better evaluation of yeast behavior and performance in a batch system at varying glucose concentrations were achieved based on its stoichiometric reaction analysis. At the highest substrate concentration used, biomass growth was maximum at 12.32 g/l, with 7.75 g/L ethanol obtained. The biomass and bioethanol productions were mostly dependent on oxidative and reductive catabolism, respectively, in which the glucose and oxygen uptake rates played the main role in the regulation of the central metabolic networks. Therefore, biomass and ethanol production are strongly reliant on the cellular functionality of yeast in the culture, which shows the superiority of this method over the black box approach.

Keywords:*Metabolic flux balance; Kluyveromyces marxianus; oxidative metabolism; reductive metabolism; oxygen uptake rate*

1. Introduction

Kluyveromyces marxianus is one of the alternative yeasts which emerged as ethanol producer and has an enormous biotechnological potential for industrial purposes. Its capability to utilize various types of sugars within its metabolic system to produce certain important metabolites makes it better than the baker's yeast, *Saccharomyces cerevisiae*. Other than that, it is also known to be useful in terms of its fast growth, thermotolerance, ability to suppress growth under excess sugar and to produce extracellular enzymes [1]. Despite of all the good traits, it possesses a Crabtree-negative behavior where it tends to produce biomass rather than bioethanol during a normal respiration process.

Production of biomass and bioethanol from yeasts have been industrially benefited by the application of modeling strategies [2, 3], due to their ease in understanding, predicting, controlling and designing biological production systems [4]. In depth cell metabolism investigation such as analysis of metabolic effects and predicting the phenotype of recombinant strain can be easily achieved by stoichiometric models and reconstructions [5,6]. Undoubtedly, the model has to take into account the main important pathways such as glycolysis, Krebs cycle, and oxidative phosphorylation if it is meant to be executable and estimated precisely. Complex and Extensive metabolic networks based on annotated genomes have been reported [7, 8, 9, 10, 11], but it is more industrially practical if the models are simpler, which consisted of a condensed list of important reactions and pathways.

Several reports on investigating the performance of this simplified model have found important insight on how the microbes behaved towards different fermentation condition especially on their process kinetics and product yield [12, 13]. Recent extensive investigations on *K. marxianus*'s metabolic engineering [14, 15, 16, 17, 18] have shown that there are great potential to explore its cellular behavior through modelling. The aim of this study was to provide insight information on the reaction rates of *K. marxianus* in a simplified metabolic network in evaluating the biomass and bioethanol production.

2. Materials and methods

2.1. Microbial strain, media formulation, inoculum preparation and fermentation conditions

A commercial *K. marxianus* ATCC 26548 (= CBS 6556, NCYC 2597, NRRL 7571) strain was grown in mineral media [19] with the following composition (g/L): $(NH_4)SO_4$, 5.0 g; KH_2PO_4, 3.0 g; $MgSO_4{\cdot}7H_2O$, 0.5g; trace elements (EDTA, 15 mg; $ZnSO_4{\cdot}7H_2O$, 4.5 mg; $MnCl_2{\cdot}2H_2O$, 0.84 mg; $CoCl{\cdot}6H_2O$, 0.3 mg; $CuSO_4{\cdot}5H_2O$, 0.3 mg; $Na_2MoO_4{\cdot}2H_2O$, 0.4 mg; $CaCl_2{\cdot}2H_2O$, 4.5 mg;

Copyright © 2018 Authors. This is an open access article distributed under the Creative Commons Attribution License, which permits unrestricted use, distribution, and reproduction in any medium, provided the original work is properly cited.

$FeSO_4 \cdot 7H_2O$, 3.0 mg; H_3BO_3, 1.0 mg; KI, 0.1mg); silicone antifoam, 0.05 ml. The media was adjusted to pH 6.0 with KOH before autoclaving (121℃, 20 min). Vitamins were added to the cooled media through filter sterilization with the composition of d-biotin, 0.05 mg; calcium pantothenate, 1.0 mg; nicotinic acid, 1.0 mg; myo-inositol, 25 mg; thiamine HCl, 1.0 mg, pyridoxine HCl, 1.0 mg; and para-aminobenzoic acid, 0.20 mg. Glucose with different concentrations (g/L) of 10, 30 and 50 was prepared and sterilized separately, before being added to the media.
Inoculum was prepared by growing a frozen stock vial in a 100 ml YPD medium (yeast extract, 10 g/l; peptone, 20 g/l; glucose, 20 g/l) in a 500-ml Erlenmeyer flask. After overnight growth on an orbital shaker (200 rpm) at 30°C, cells were centrifuged and washed twice with 0.9M NaCl solution. The cells were adjusted to 10 g/l of wet cells with sterile distilled water (2 g/l dry cell weight) and were used as the starter inoculums for the fermentation. A 2-liter benchtop Minifors bioreactor (Infors, Switzerland) was used for all batch experiments. The pH of the media was controlled with 1M KOH and 1M HCl. Fermentation conditions were 40°C, pH 4.5, aeration of 1.0vvm air by point sparger and a constant agitation speed of 250 rpm with Rushton's impeller.

2.2. Analytical techniques

Prior to analysis, samples were centrifuged at 3,000×g for 5 min at 4°C. The pellet was collected and measured for biomass concentration in terms of grams dry weight per sample volume and indirectly determined by OD measurements performed with a spectrophotometer (Shimadzu, Kyoto, Japan) at 600 nm. The measured absorbance values were converted into mass values using a linear relationship of 0.57 OD units per gram dry cell mass. Glucose and bioethanol were measured by HPLC using an Aminex HPX-87H ion-exclusion column (3007.8 mm; Bio-Rad, Hercules, CA) at 45°C, using 5mM H_2SO_4 as the mobile phase at a flow rate of 0.5 ml min^{-1}. Both compounds were detected by a RI detector (Shimadzu, Kyoto, Japan).

2.3. Modelling technology and software

A stoichiometric equation of the conversion of glucose (CH_2O), ammonia (NH_3) and dissolved oxygen (O_2) to *K. marxianus* biomass ($CH_{1.98}O_{0.72}N_{0.16}$) and ethanol ($CH_3O_{0.5}$) is written using a basis of 1 mole carbon with glucose as the main substrate and is denoted by a black box description in the following form:

$$CH_2O + NH_3 + O_2 \rightarrow CH_{1.98}O_{0.72}N_{0.13} + CH_3O_5 + CO_2 + H_2O \quad (1)$$

The vector (***q***) of reaction rates associates to Eq. (1) is:

$$q = \left[q_S\, q_{NH_3}\, q_{O_2}\, q_X\, q_E\, q_{CO_2}\, q_{H_2O}\right]^T \quad (2)$$

Following a degree of freedom, D_f analysis [20], in order to obtain an underdetermined system, three reactions rates from vector ***q*** has to be measured from experimental data while the other four has to be calculated from the equation. Therefore, the vector ***q*** is restated as $q = \left[q_m q_c\right]$, by taking account of a subvector of measured rates as $q_m = \left[q_S q_X q_{O_2}\right]^T$, and a subvector of calculated rates as $q_c = \left[q_{NH_3} q_E q_{CO_2} q_{H_2O}\right]^T$. The model's equation is then written as [20]:

$$q_c = -\left[E_c^{-1} E_m\right] q_m \quad (3)$$

where,

$$E = \left[E_c\, E_m\right];$$

$$\text{with } E_m = \begin{bmatrix} 1 & 1 & 0 \\ 2 & 1.98 & 0 \\ 1 & 0.72 & 2 \\ 0 & 0.13 & 0 \end{bmatrix} \text{ and } E_c = \begin{bmatrix} 0 & 1 & 1 & 0 \\ 3 & 3 & 0 & 2 \\ 0 & 0.5 & 2 & 1 \\ 0 & 0 & 0 & 0 \end{bmatrix} \quad (4)$$

E is described as the elemental matrix associated to Eq. (1) [20].

A more extensive description involving biochemical reactions in *K. marxianus's* aerobic growth and bioethanol production is developed from metabolic flux balance (MFB). By applying this method, one can evaluate the performance of the yeast through reaction rates of flux distribution when several important metabolic reactions leading to biomass and bioethanol production are considered. The condensed *K. marxianus* central carbon metabolism model is based on the general mass balance Eq. (5):

$$\frac{dX}{dt} = q_{met} - \mu X_{met} \quad (5)$$

where dX/dt is the changes of cell concentration during fermentation time, q_{met} is the metabolites' reaction rate (g/g DW-h), μ is the specific growth rate (h^{-1}) and X_{met} is the biomass concentration (g/l). The overall cell's metabolism assumed to react at a steady state as well as in producing metabolites, can then be described as the following Eq. (6):

$$0 = q_{met} - \mu X_{met} \quad (6)$$

In order to accomplish a successful model of metabolic flux analysis, such assumptions like the specific growth rate, μ is constant during the exponential phase and all reactions in the cell occurred in steady state, where all the fluxes from substrate uptake, oxygen uptake and metabolites production are constant when μ is constant. A stoichiometric model was initiated from the form of $S \cdot v = 0$, where S is the stoichiometric matrix and v is a vector of fluxes. The matrix and the flux vector are constructed by developing a steady-state mass balance on each intracellular metabolite, which is then converted to matrix form. Since the resulting model was underdetermined, linear programming was used to solve for optimal fluxes.

Maximization of the objective function is subjected to:

$$\sum_j s_{ij} v_j = 0 \text{ for each } i \in M_i$$

$$\sum_j s_{ij} v_j = 0 \text{ for each } i \in M_r$$

$$\sum_j s_{ij} v_j = 0 \text{ for each } i \in M_p$$

where s_{ij} is the stoichiometric coefficient of the ith metabolite in the jth reaction, v_j is the flux of the jth reaction, M_i is the set of the intracellular metabolites, M_r is the set of reactants other than the substrate, and M_p is the set of products excreted. A linear program was formulated in the GAMS environment version 25.1.2 (GAMS Development Corporation, Washington, DC).

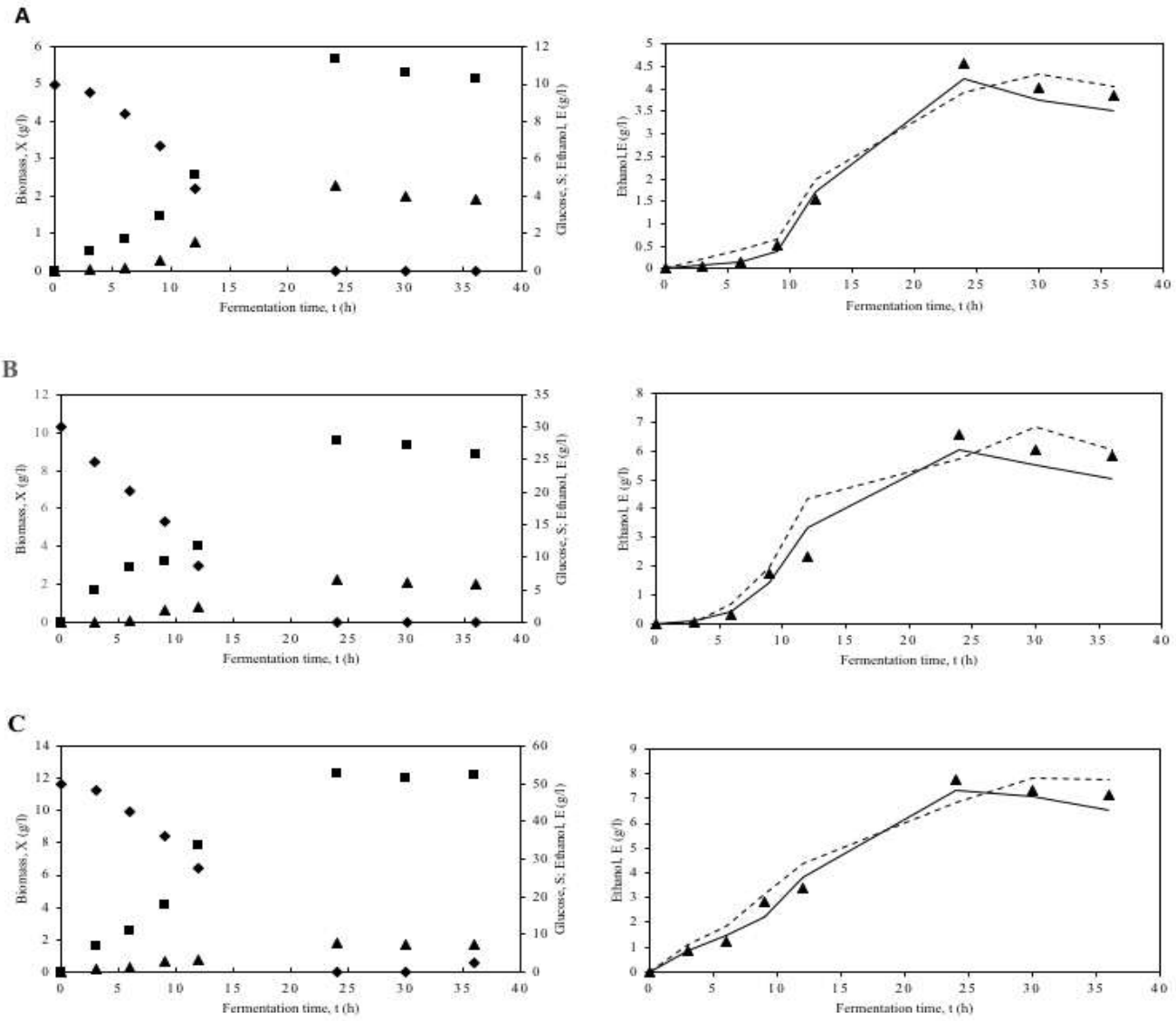

Fig. 1. Biomass concentration (■), glucose concentration (◆) and ethanol production (▲) measured experimentally in *K. marxianus* batch culture with different glucose concentration (g/l): (A) 10, (B) 30, and (C) 50. Plots on the right were representing the predicted ethanol concentration by black box description (- -) and by metabolic flux balance analysis (—).

3. Results and Discussion

Fermentation performance of *K. marxianus* batch culture for the production of biomass and bioethanol with different glucose concentration is depicted in Fig. 1. Similar kinetic trends were found in all fermentation runs. Biomass production was aggressively increased and reached the highest value of 12.72 g/l (Fig. 1C) after 24 h of fermentation, then started to decrease as the glucose depleted. Meanwhile, ethanol was slowly produced and achieved the maximum production of 7.75 g/l after 24 h (Fig. 1C). As predicted for a Crabtree negative yeast, an increasing trend of biomass production compared to ethanol is clearly shown as high glucose was supplied to the feed. This finding indicates that the oxidative metabolism was preferred over the reductive metabolism, therefore ethanol production was lower with large substrate availability. As the substrate availability is higher in the media, the usual occurrence of CO_2 from pyruvate decarboxylation accompanied with ethanol production at the maximal O_2 consumption resulted in respiratory quotient (RQ) greater than 1. It is in contrast in *K. marxianus's* culture, as the glucose concentration is increased, O_2 consumption will be greater than CO_2 production which lead to higher biomass production and subsequently hinder the ethanol production, which showed decreasing trend of respiratory quotient (RQ = 0.8). Although the product (bioethanol) is associated with the growth of *K. marxianus* and occurred simultaneously in the media, metabolism can be controlled to induce either product.

3.1. Flux analysis of bioethanol production using black box description

A black box model was described as the simplest approach in determining the reaction rates of the stoichiometric equation of biomass and ethanol production by *K. marxianus*. Reaction rates of biomass growth, substrate consumption and oxygen uptake were measured experimentally and used to obtain fluxes of other compounds. According to the black box description, as the ethanol production rate (q_E) estimation can be obtained from the calculation, the instantaneous ethanol concentrations can be predicted from Eq. (7):

$$E_{i+1} = E_i + q_E \Delta t \tag{7}$$

where E_i is ethanol concentration (g/l), q_E is flux of ethanol (g/g DW-h), Δt is fermentation time (h) and E_0 is given by zero ethanol production at the beginning of fermentation time. Estimation of ethanol concentration is depicted in Fig. 1, which were shown to be acceptable as compared to the experimental values. However, ethanol estimations are substantially enhanced by considering the main metabolic events in the conversion of glucose to both yeast biomass and bioethanol.

3.2. Metabolic flux balance analysis for condensed metabolic network in *K. marxianus*

A condensed *K. marxianus* metabolic reactions model was constructed to explain biomass growth and ethanol production in batch fermentation, as depicted in Fig. 2. A total of six reaction rates from the most important cellular process such as glycolysis, biomass production, pyruvate decarboxylation, tricarboxylic acid (TCA) cycle, ethanol production and respiratory chain reaction (Table 2) were investigated in the model. The overall flow of the flux is started from glucose to pyruvate through glycolysis (r_1), which then the 3-carbon compound is decarboxylated to acetyl-CoA (r_3). The fate of this intermediate is further converted to either ethanol via flux (r_5), or flow through to a simplified citric acid (TCA) cycle in flux (r_4), which respectively corresponds to reductive and oxidative catabolism in the cells. The respiratory chain reactions and rate of NADH oxidations were described through flux (r_6), while r_2 indicates a simplified biomass production from the key intermediates: glucose, pyruvate, and acetyl-CoA.

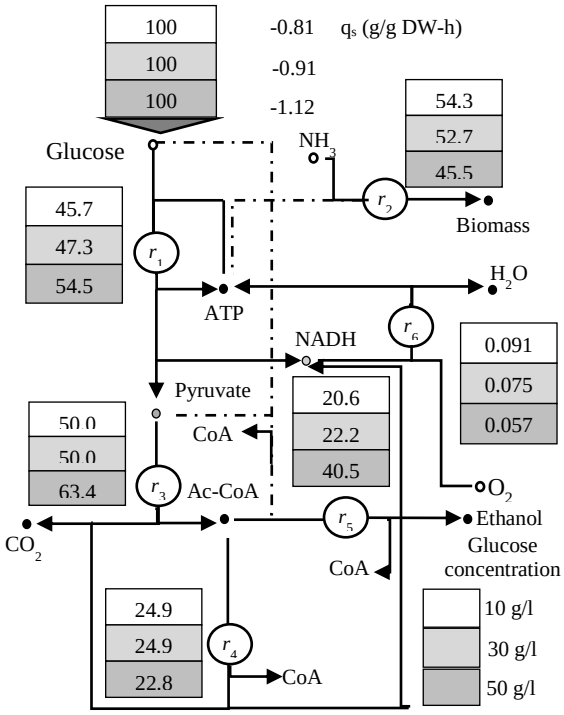

Fig.2: The simplified metabolic network for batch culture of *K. marxianus* producing biomass and ethanol. Metabolic fluxes for different glucose concentrations (10, 30 and 50 g/l) are referred to glucose uptake rate (100%).

Table 1 shows the stoichiometric reaction equations associated with this simplified metabolic network. To satisfy the requirement for model execution in GAMS software, several other reactions such as transport and product reactions were constructed, in line with the need of mass balancing the overall equation of metabolite. Glucose was the main substrate in the batch culture and had dominant influence on the rate of growth, as shown by the increase in cell growth rate as the substrate concentration increased. For Crabtree negative yeast, oxygen consumption also plays an important role in cell propagation and limiting the reductive activities in Krebs cycle thus slowing down the production of ethanol. It is also reported that ethanol production in its sister species, *K. lactis* corresponds to the decrease of oxygen supply [21]. Both yeasts are assumed to be upregulated around pyruvate bypass during the earlier stage of fermentative growth, thus increased the production of acetyl-CoA to feed both fluxes, i.e. Krebs cycle and ethanol production [21]. The glucose was consumed gradually with the increase in growth, resulting in constant volumetric rates for production and consumption, thus providing a consistent distribution of fluxes throughout the metabolic network.

Table 1: Condensed stoichiometry reactions for *K. marxianus* batch culture utilizing glucose as the main substrate to produce biomass and ethanol

Reaction process	Condensed reaction
Glycolysis, r_1	Glucose + 2 P_i + 2ADP + 2NAD^+→ 2Pyruvate + 2H_2O + 2ATP + 2NADH
Biomass production, r_2	Glucose + Pyruvate + Acetyl-CoA + NH_3 + 27.5ATP + 24.1H_2O → Biomass + CoA + 27.5ADP + 27.5 P_i
Pyruvate decarboxylation, r_3	Pyruvate + CoA + NAD^+→ Acetyl-CoA + CO_2 + NADH
TCA cycle, r_4	Acetyl-CoA + 2H_2O + P_i + ADP + 4NAD^+→ 2CO_2 + CoA + ATP + 4NADH
Ethanol production, r_5	Acetyl-CoA + P_i + ADP + 2NADH → Ethanol + CoA + H_2O + ATP + 2NAD^+
Respiratory chain, r_6	3ADP + 3H_3PO_4 + NADH + 0.5O_2→ 3ATP + NAD^+ + 4H_2O

The MFB analysis was carried out by giving initial input to the model as to satisfy the smooth running of the model, solving the problem of underdetermined system when the number of reactions is greater than number of metabolites. The initial value of specific substrate uptake rate, q_s, specific growth rate, μ and specific oxygen uptake rate, q_{O2} (data not shown) were measured experimentally at the exponential stage and used to support the model execution. The resulting flux of ethanol production from the model is obtained and used for the estimation of ethanol concentrations is as depicted in Fig. 1, where it can be observed that the predicted values were greater than they were in the black box description and more closely plotted to the experimental values.

Table 2: Yield coefficients for *K. marxianus* batch cultures at varied glucose concentration.

Glucose concentration, (g/l)	Final biomass concentration, (g/l)	Final ethanol concentration, (g/l)	Biomass yield, (g/g)	Bioethanol yield, (g/g)
10	5.67	4.56	0.628	0.601
30	9.54	6.56	0.406	0.309
50	12.32	7.75	0.229	0.137

It is relatively shown in Fig. 2, as glucose concentration is increased initially in the media, the flux lead to biomass production (r_2) decreased, but in contrast with the ethanol excretion, (r_5). This trend would indicate a physiological adjustment by the cell to adapt to an excessive glucose condition, so as to activate the reductive catabolism (r_5), which corresponds to the glycolytic flux (r_1), as shown in Fig. 3B. NADH oxidation has been suppressed by glucose [22] as depicted in Fig. 3A to show negative relationship with r_1. Metabolic flux (r_4) represents oxidative catabolism, which its flux decreased when glycolytic flux (r_1) increased. However, in Fig. 3D, reductive metabolism (r_5) has increased in flux when the oxidative catabolism flux (r_4) decreased, which is not consistent with Fig. 2, where higher biomass production was recorded compared to ethanol production. Unrealistic flux result is sometimes occurred in flux balance analysis (FBA) especially in ethanol production in yeast, which the actual experimental result is not corresponding with the flux pattern in FBA solution [23].

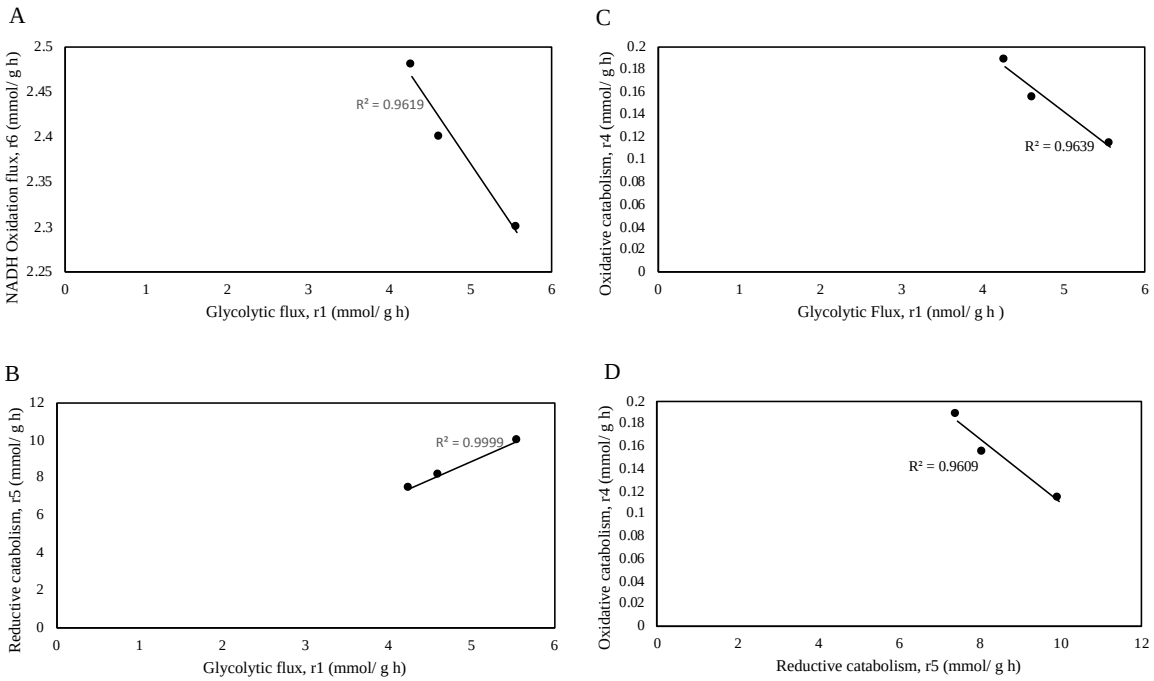

Fig.3: Comparison between reaction fluxes for oxidative and reductive catabolic pathways for K. marxianus batch culture

The effect of oxygen consumption by *K. marxianus* was investigated at 40°C with and without aeration control into the fermentation system. Faster cell growth was observed at a controlled aeration condition compared to the uncontrolled condition. At high temperature (40°C), there was a significant amount of acetic acid produced (data not shown) which was also found by Signori et al, 2014 [24], as to satisfy the demand of NADH. This finding can also elucidate the important role of acetaldehyde dehydrogenase in controlling the NADH pool, thus driving the production of ethanol. Moreover, NADH formation is significantly correlated with oxygen supply as the reducing power is necessary to neutralize the reactive oxygen species (ROS) [25, 26].

The different behavior responses of yeast cells towards glucose uptake flow can be investigated through this finding on the oxidative and reductive metabolism. As for *K. marxianus*, its tendency to drive oxidative metabolism greater than reductive metabolism has shown that biomass is produced higher at the beginning of the fermentation due to high oxygen level, which most of the substrate is consumed for cell propagation. Fonseca et al. (2013) reported that controlled aeration in *K. marxianus* culture is necessary to ensure better growth as it is directly proportional to specific growth and substrate uptake rate [27]. As the oxygen depleted, the fermentation shifted to facultative condition, where the ethanol production through reductive metabolism has occurred. Ethanol production in *K. marxianus* culture is more evident at significant growth rates above 0.4-0.45 h^{-1} on glucose and was found absent below the interval [27]. Any reductive catabolism enhancement that can be done to activate or inhibit specific enzymes for pyruvate decarboxylation and reduction to ethanol [28], depends on the glucose uptake rate. Conversely, an experimental study on molecular expression/repression on oxidative metabolism would be necessary to obtain actual values of flux from different pathways with different substrate concentration [28]. Glucose uptake levels seem to be strongly involved in the oxidative physiology of aerobic yeast cultures, whereas biomass and ethanol production yields depend on the glucose/oxygen uptake balance.

4. Conclusion

One of the benefits of performing MFB analysis is that one can predict specific metabolites concentration through metabolic pathway which can further provide useful information for any genetic modification. In solving linear algebraic equations, several considerations has to be fulfilled when the system is in underdetermined or overdetermined condition, thus experimental measurements are needed to complete the model execution. The unknown information such as glycolytic flux, reductive and oxidative metabolism as well as NADH oxidation rates were obtained through MFB analysis on *K. marxianus* fermentation. The reaction rates of biomass growth, sugar consumption and oxygen consumption were estimated and calculated using experimental data. Performance of biomass and ethanol production can be evaluated precisely when both biochemical and metabolic inputs held together as well as to improve the estimation of final metabolites concentration and yields. Fluxes of oxidative and reductive metabolism are useful to obtain optimal yield and to investigate strain performance as well as to provide precise prediction of experimental concentrations for bioethanol production. Behavior and physiology of the cells can be studied from the analysis of the fluxes, thus both biomass and ethanol production can be improved by modifying fermentation conditions or through genetic modification of specific target gene. High substrate supply should be introduced while maintaining low oxygen level if one considers to maximize ethanol production. For enhancing biomass production, maximizing oxidative catabolism can be achieved by controlling substrate concentration in full aerobic condition, which will upregulate the pyruvate metabolism.

Acknowledgement

The authors are grateful to Universiti Sains Malaysia (USM), for providing financial assistance through Research University (RU) Grant (1001/PJKIMIA/811272) during the course of this research.

References

[1] Pentjuss A, Stalidzans E, Liepins J, Kokina A, Martynova J, Zikmanis&Motzga I (2017), Model-based biotechnological potential analysis of *Kluyvromyces marxianus* central metabolism. *Journal of Industrial Microbiology and Biotechnology* 44 (8), 1177-1190.

[2] Cannizzaro C, Valentinotti S & von Stockar U (2004), Control of yeast fed-batch process through regulation of extracellular ethanol concentration. *Bioprocess and Biosystems Engineering* 26, 377-383.

[3] Wong WC, Song, HS, Lee JH &Ramkrishna D (2010), Hybrid cybernetic model-based simulation of continuous production of lignocellulosic ethanol: Rejecting abruptly changing feed conditions. *Control Engineering Practice* 18, 177-189.

[4] Wu, WH., Wang FS & Chang MS (2008), Dynamic sensitivity analysis of biological systems. *BMC Bioinformatics* 9, 1-17.

[5] Kalnenieks U, Pentjuss A, Rutkis R, Stalidzans E & Fell DA (2014), Modeling *Zymomonas mobilis* Central Metabolism for Novel Metabolic Engineering Strategies. *Frontiers in Microbiology* 5, 1-7.

[6] Kerkhoven EJ, Lahtvee PJ & Nielsen J (2015), Application of Computational Modeling in Metabolic Engineering of Yeast. *FEMS Yeast Research* 15(1), 1-13.

[7] Pricen ND, Reed JL & Palsson BO (2004), Genome-scale models of microbial cells: Evaluating the consequences of constraints. *Nature Reviews Microbiology* 2, 886-897.

[8] Mahadevan R, Burgard AP, Famili I, van Dien S & Schilling CH (2005), Applications of metabolic modelling to drive process development for the production of value-added chemicals. *Biotechnology and Bioprococess Engineering* 10, 408-417.

[9] Hjersted JL, Henson MA & Mahadevan R (2007), Genome-scale analysis of *Saccharomyces cerevisiae* metabolism and ethanol production in fed-batch culture. *Biotechnology and Bioengineering*97, 1190-1204.

[10] Bro CH, Regenberg B, Förster J, & Nielsen J (2006), In silico-aided metabolic engineering of *Saccharomyces cerevisiae* for improved bioethanol production. *Metabolic Engineering* 8, 102-111.

[11] Shiyota S, Shimizu H, Hirasawa T, Nagahisa K, Furusawa C, Pandey G& Katakura Y (2007), Metabolic pathway recruiting through genome data analysis for industrial application of *Saccharomyces cerevisiae*. *Biochemical Engineering Journal* 36, 28-37.

[12] Burgard AP, Vaidyarama SN &Maranas CD (2001), Minimal reaction sets for *Escherichia coli* metabolism under different growth requirements and uptake environments. *Biotechnology Progress* 17, 791-797.

[13] Aranda-Barradas JS, Garibay-Orijel C, Badillo-Corona JA & Salgado-Manjarrez E (2010), A stochiometric analysis of biological xylitol production. *Biochemical Engineering Journal* 50, 1-9.

[14] Hong SJ, Kim HJ, Kim JW, Lee DH &Seo JH (2015), Optimizing promoters and secretory signal sequences for producing ethanol from inulin by recombinant *Saccharomyces cerevisiae* carrying *Kluyveromycesmarxianus* inulinase. *Bioprocess and Biosystems Engineering* 38, 263–272.

[15] Kim JS, Park JB, Jang SW &Ha SJ (2015), Enhanced xylitol production by mutant *Kluyveromyces marxianus* 36907-FMEL1 due to improved xylose reductase activity. *Applied Biochemistry and Biotechnology*176, 1975–1984.

[16] Kim TY, Lee SW &Oh MK (2014), Biosynthesis of 2-phenylethanol from glucose with genetically engineered *Kluyveromyces marxianus*. *Enzyme and Microbial Technology* 61–62, 44–47.

[17] Zhang B, Zhang J, Wang D,Han R, Ding R, Sun L &Hong J (2016), Simultaneous fermentation of glucose and xylose at elevated temperatures co-produces ethanol and xylitol through overexpression of a xylose-specific transporter in engineered *Kluyveromyces marxianus. Bioresource Technology* 216, 227–237.

[18] Zhang J, Zhang B, Wang D, Gao X, Sun L &Hong J (2015), Rapid ethanol production at elevated temperatures by engineered thermotolerant*Kluyveromycesmarxianus* via the NADP(H)-preferring xylose reductase-xylitol dehydrogenase pathway. *Metabolic Engineering* 31,140– 152.

[19] Verduyn C, Postma E, Scheffers WA &vanDijken JP (1992), Effect of benzoic acid on metabolic fluxes in yeasts: a continuous-culture study on the regulation of respiration and alcoholic fermentation. *Yeast* 8, 501–517

[20] Nielsen J &Villadsen J, *Bioreaction Engineering Principles*, Plenum Press, NY, USA, (1994), pp. 100-102

[21] Kiers J, Zeeman AM, Luttik M, Thiele C, Castrillo JI, Steensma HY, van Dijken, JP &Pronk JT (1998), Regulation of alcoholic fermentation in batch and chemostat cultures of *Kluyveromyces lactis* CBS 2359. *Yeast* 14, 459–469.

[22] Gancedo JM (1998), Yeast carbon catabolite repression. *Microbiology and Molecular Biology Reviews* 62, 334-361.

[23] Simeonidis E, Murabito E, Smallbone K & V. Westerhoff H (2010), Why does yeast ferment? A flux balance analysis study. Biochem. Soc. Trans., 1225-1229

[24] Signori L, Passolunghi S, Ruohonen L, Porro D &Branduardi P (2014), Effect of oxygenation and temperature on glucose-xylose fermentation in *Kluyveromyces marxinaus* CBS712 strain. *Microbial Cell Factories* 13, 51-63.

[25] Gonzalez-Siso MI, Garcia-Leiro A, Tarrio N& Esperanza CM (2009), Sugar metabolism, redox balance and oxidative stress response in the respiratory yeast *Kluyveromyces lactis*. *Microbial Cell Factories* 8, 46-62.

[26] Saliola M, Tramonti A, Lanini C, Cialfi S, De Biase D & Falcone C, (2012) Intracellular NADPH levels affect the oligomeric state of the glucose 6-phosphatedehydrogenase. Eukaryotic Cell 11, 1503–1511.

[27] Fonseca GG, de Carvalho NMB &Gombert AK (2013) Growth of the yeast *Kluyveromycesmarxianus* CBS 6556 on different sugar combinations as sole carbon and energy source. *Applied Microbiology and Biotechnology* 97:5055–5067.

[28] Barrera-Martinez I, Gonzalez-Garcia RA, Salgado-Manjarrez E& Aranda-Barradas, JS (2011), A Simple Metabolic Flux Balance Analysis of Biomass and Bioethanol Production in *Saccharomyces cerevisae* Fed-batch Culture. *Biotechnology and Bioprocess Engineering* 16,13-22.