International Journal of Engineering & Technology, 7 (4.40) (2018) 1-4

International Journal of Engineering & Technology

Website: www.sciencepubco.com/index.php/IJET

Research paper



A Low-Cost Instrument Based on Thick Film Sensors for Measuring Water Conductivity and Temperature

Goib Wiranto [1]*, I Dewa Putu Hermida[1], Briliant A. Prabowo[1], Roberth V. Manurung[1], Slamet Widodo[1], Gilang P. Aji[2], and Tri Rahajoeningroem[2]

[1]Research Center for Electronics and Telecommunication, Indonesian Institute of Sciences (LIPI), Bandung, Indonesia
[2]Department of Electronics, Indonesian Computer University (UNIKOM), Bandung, Indonesia
**Corresponding author E-mail:gwiranto@gmail.com*

Abstract

This paper describes the development of a portable instrument for measuring the conductivity and temperature of water. The system consisted of thick film sensors fabricated on alumina substrates using screen printing technique, and Arduino microcontroller to process and display the measured water parameters. The conductivity sensor was designed in a four-electrode configuration using AgPd conductor with a cell constant of 0.2 cm-1, whereas the temperature sensor was screen printed using RuO2 paste. The system has been tested to measure the conductivity of various water samples, including river and drinking water, and comparison with a commercial system demonstrated an error of less than 2.4 %. The maximum conductivity value that could be measured was under 2000 μS/cm, which makes the system suitable for monitoring of general drinking water and domestically polluted river water.

Keywords: *conductivity; thick film; sensors; low-cost; water monitoring*

1. Introduction

Problems related to water pollution has become increasingly complicated over the years, especially in the third world countries like Indonesia. The rapid increase in human population and industrial activities has caused rapid degradation of the country's water resources, which leads to lack of clean sources for drinking water. Among all water pollution parameters, conductivity is one of the most important parameters as it tells the combined effects from all ions in the water [1]. The measurement of conductivity is important to determine the quality of ground and drinking water since the conductivity value can be directly related to the total dissolved solids (TDS) in the water [2]. In aquatic life where many species are sensitive to abrupt changes in the ionic concentration of the water, conductivity plays a vital role [3]. Conductivity measurement is also important when applied to soil solution in a modern precision agriculture system [4,5].

Measuring the conductivity of a liquid can be done using sensors having two electrodes by which an alternating current is passed through them and into the solution, and then measuring the resulting voltage. In their simplest configuration, conductivity sensors can even be constructed using two wire probes. This principle has been applied in many previous works [6]. However, today's conductivity sensors employed solid state thick or thin film technology because they provide accurate, robust, inexpensive, and miniature devices suitable for long-term water quality measurement [7]. Using thick film technology, sensor components can be fabricated on planar structures, and their materials may be chosen so that resulted in highly sensitive devices and minimized the effect of nonlinearity and antifouling, which are commonly encountered in field application of chemical sensors. The use of gold [8] and platinum [9] electrodes have been very common in chemical sensors as those materials are non-corrosive and stable over a long period of time. The main limitation, however, is their price which are still higher than most other sensor materials, and when a sensor signal conditioning electronics must be considered including its ability for temperature compensation [10], it is not surprising that today's commercial conductivity sensors are still quite expensive.

This research was aimed at fabricating a low-cost instrument for accurately measuring the conductivity and temperature of water. The main part of the system was a thick film sensor made from silver palladium (AgPd) electrodes, which is known to be less expensive than gold or platinum counterparts. The conductivity sensor has been designed in a four-electrode configuration on an alumina (Al_2O_3) substrate, integrated with a ruthenium-based temperature sensor screen printed on the same side of the substrate. Signal processing, electronics and display was controlled using Arduino microcontroller.

2. Design and fabrication of thick film sensor device

In designing the device using thick film technology, the first consideration was that the structure must accommodate both the conductivity electrodes and temperature sensor in the same substrate. The presence of temperature sensor is important for temperature compensation purposes. To maximise the number of devices that can be fabricated in one substrate, the sensor device has been designed to fit on a 12.5 mm x 25 mm alumina (Al_2O_3) substrate, with both sensors designed on one side of the substrate. With such structure, it allows for eight devices to be simultaneously fabricated on a 50 mm x 50 mm Al_2O_3 substrate. Figure 1(a) shows the design of the sensor devices on the alumina substrate.

Copyright © 2018 Authors. This is an open access article distributed under the Creative Commons Attribution License, which permits unrestricted use, distribution, and reproduction in any medium, provided the original work is properly cited.

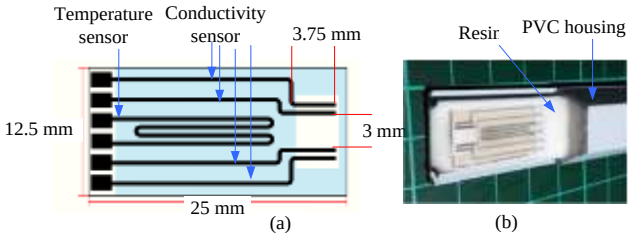

Fig. 1: (a). Layout of the conductivity and temperature sensor tracks on alumina substrate, (b). The final sensor device as mounted on a PVC housing

The maximum conductivity value that can be measured by the sensor was determined by the cell constant of the device, which is the ratio between the distance and cross-sectional area of the measuring electrodes [11]. With the width of the electrode tracks of 0.4 mm, the cell constant can be calculated from the designed sensor as 3 mm/(3.75 mm x 0.4 mm) or equal to 0.2 cm^{-1}. With the cell constant of 0.2 cm^{-1}, the highest conductivity value that can be measured was up to 2000 µS/cm [12].

The ability of a liquid to conduct electrical current depends on the mobility of ions in the solution. Since ion mobility depends on temperature of the solution, therefore conductivity is also dependent on the temperature of the solution. The dependence of conductivity (σ) on temperature with 25 °C reference temperature can be expressed as [13]

$$\sigma = \frac{K}{R} \frac{1}{1+(\alpha/100)(T-25)} \quad (1)$$

where α is temperature compensation factor as % change per °C and T is the measured liquid temperature in °C.

As has been described elsewhere [14], fabrication of the sensor device was started by screen printing AgPd conductor paste (Shoei Chemicals, Inc.) used as electrodes for the conductivity sensor on a 50 mm x 50 mm, 96% Al_2O_3 substrate. After printing, the tracks were dried at 150 °C for 15 min. The second step was screen printing a RuO2 (ESL Electro Science 3911) resistor paste used as the temperature sensor followed by drying at 150 °C for 15 min. The resulting structure was then fired using conveyor belt furnace for 45 min with a peak temperature of 800 °C. Passivation of the conductor and resistor tracks was done by screen printing a dielectric layer (Dupont), followed by drying at 150 °C for 15 min. The structure was then fired at 500 °C for 45 min. The substrate was then cleaned by ultrasonic for 5 min, and each device was cut manually using a diamond cutter. The final device structure was mounted on a PVC pipe as shown in Figure 1(b).

3. System design and realization

As can be seen in Figure 2, the overall system has been designed in three parts: the input block, the processing unit, and the output.

3.1. The Input Block

The input block consisted of a Real Time Clock (RTC), an Oscillator, and the fabricated device sensor. The RTC was based on IC DS3231 (Maxim Integrated) that functioned to provide date and time information to the Arduino microcontroller. Connection from IC DS3231 to the AT Mega 328 microcontroller was done through I2C pins (SDA, SCL). The conductivity sensor operates in a four-electrode configuration. Thus, it requires an AC input signal to reduce polarization effect [15]. A Wien Bridge type oscillator was used to generate 10 kHz sinusoidal input for the conductivity sensor. The bridge was based on a general purpose OpAmp TL074 (Texas Instrument). The output of the oscillator was connected to the reference electrode of the conductivity sensor. For the temperature sensor, the connection to the ADC was done through voltage divider configuration.

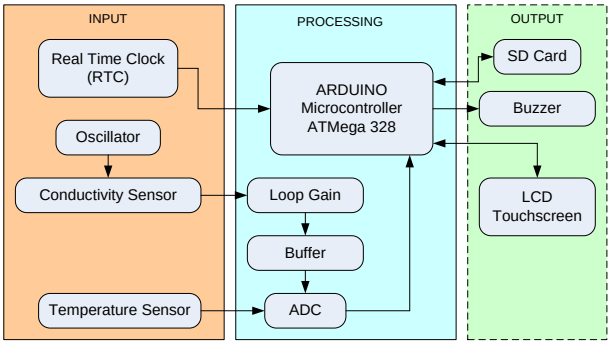

Fig. 2: Block diagram of the overall sensor system design

3.2. The Processing Unit

The processing unit consisted of Arduino microcontroller, loop gain, buffer circuit, and an Analog to Digital Converter (ADC). The main part of the processing unit was the Arduino, with microcontroller based on IC AT Mega 328. The microcontroller was used to process all instructions and control the entire system function. The output of the conductivity sensor must be amplified before it can be read by the ADC. The loop gain circuit was constructed using OpAmp TL074, which functioned as an impedance amplifier for the sensor output. To maintain a stable output voltage from the loop gain, a buffer circuit has been used before connection with the Arduino.

3.3. The Output Block

The output block consisted of an SD Card, buzzer and an LCD. An SD Card was used to store data that have been processed by the Arduino. The data include conductivity value, temperature, date and time of the measurement. They were stored in ".csv" format to be readable using Microsoft Excel. The SD card can also read and write a file so that the microcontroller can display it on the LCD. Connection of the SD Card to the microcontroller was done through SPI (MISO, MOSI, SCK) pins.

A touchscreen LCD (Nextion 2.8 inch) with Graphical User Interface (GUI) capability has been used as interface to display the output of the sensor reading. The LCD was connected to the microcontroller through serial pins (TX, RX) of the Arduino. As an indicator that a menu has been selected, a buzzer circuit was used with sound output connected to directly to pin 8 of the Arduino.

A user interface was required to allow user to communicate with the system using LCD. For this purpose, the LCD has been designed to have four main menu options as the user interface: Sensor, Log, Time, and Format where each has specific function. Data from the sensor reading can be read directly by touching the Sensor menu, in which then a sub menu Hold and Save will appear to allow data to be displayed or saved into the SD card. The Log menu can be used to display the previously stored data, whereas the Format menu will allow user to delete all data stored in the micro SD card.

3.4. The Power Supply

For a portable instrument, power supply plays an important role in providing efficient and long-lasting power to the entire system. The block diagram for the power supply system used in the developed instrument is shown in Figure 3. A battery charger module (TP4056 Nanjing Top Power ASIC Corp.) is used to allow recharging of the Li-Ion battery. The module provides 1000 mA charging current to the Li-Ion battery. Since the microcontroller and some components in the system required 5V input voltage, a step-up voltage circuit was needed to increase the battery voltage from 3.7V to 5V. For this purpose, a CE8301 (Sunrom Electronics/Technologies) DC to DC step up module has been employed. Finally, a symmetrical voltage regulator circuit was used to gener-

ate a -5V using IC7660 (Intersil), which was required to drive IC TL074 for the sinusoidal input of the conductivity sensor.

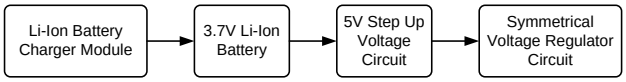

Fig. 3: Block diagram of the power supply system

4. Results and discussion

The completed portable system can be seen in Figure 4. The data logger was enclosed inside an acrylic body which was laser cut to fit the microcontroller, electronic circuits, battery, and the LCD. Connection from the sensing probe to the data logger was made through a 6-pin male input port connector. The system has been characterized and calibrated against a commercially available conductivity meter (Jenway 4150). The characterization was done using several solutions containing 100 ml water added by solutions with conductivity value of 2043 µS at 1 ml increment. The solution was chosen since the designed system had a conductivity sensor with a maximum theoretical measurement limit of 2000 µS.



Fig. 4: The developed portable instrument consisting of a sensing probe and a data logger

The aim of the characterization was to compare the measurement values as read from the sensor (through the output of the ADC) and the commercial conductivity meter. For each sample, the measurement was done by dipping the sensor into the sample solution for 5 minutes. Figure 5 shows the resulting measurement where both outputs have been plotted to find their linear relationship. Using Least Square Method (LSM), their linear relationship can be approximated in the form of y = a + bx, where y is the measured conductivity value, x is the ADC value, and a and b are constants. Substituting the numbers into the LSM equation, it was found that the values of a and b were -20.46 and 4.75, respectively.

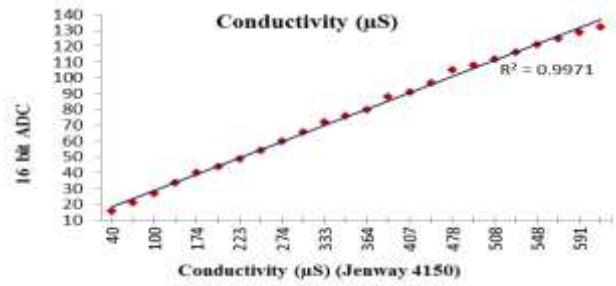

Fig. 5: The plot of conductivity values as read Jenway 4150 and the 16-bit ADC

For the temperature sensor, the same method was applied to find the linear relationship between the sensor (through the output of the ADC) and the built-in temperature sensor of the commercial conductivity meter. The results of measurement can be seen in Figure 6, and using the LSM equation, it was found that that the values of a and b were 52.12 and -0.002, respectively.

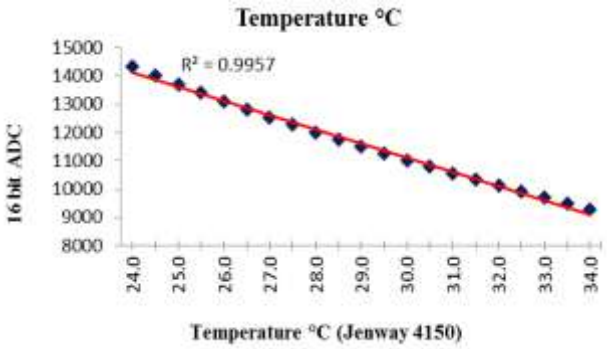

Fig. 6: The plot of temperature values as read Jenway 4150 and the 16-bit ADC

Once the equations for both conductivity and temperature sensors were found, the microcontroller was then programmed using those equations to calibrate the measured sensor values into the corresponding real parameter values. The final characterization was then done using real water samples from various sources. For each sample, the measurement was done for 5 minutes and the resulting measurement was compared with that from the commercial meter. Table 1 shows the results of measurements conducted using various water samples.

In general, the developed system performed well when used for measuring water samples with conductivity values of less than 2000 µS, and temperature range from 24 to 30 °C. The lowest conductivity value measured was from rain water, with a value of 17 µS, and only 1.73% different compared with the commercial system. Mineral waters from 8 different brands have the measured conductivity values ranged from 120 to 349 µS, with the highest being comparable with ground water. The system also gave good measurement when used to measure mildly polluted river water, with conductivity values around 1500 µS. For high conductivity sample such as sea water, the system began to give higher measurement different of more than 50%, because it was beyond the measurement range of the developed system.

5. Conclusion

The development of an instrument for measuring the conductivity and temperature of water has been described in this paper. The developed system consisted of thick film conductivity and temperature sensors fabricated on alumina substrate using screen printing technique, and Arduino microcontroller to process and display the measured parameters. The conductivity sensor was designed in a four-electrode configuration using AgPd conductor with a cell constant of 0.2 cm^{-1}, whereas the temperature sensor was screen printed using RuO_2 paste. The system was calibrated against a

commercial conductivity meter, and has been tested to measure the conductivity of various water samples, including ground, drinking, polluted river and seawater, and comparison with a commercial system demonstrated an error of less than 2.4 % for conductivity values of less than 2000 μS. The developed system was suitable for monitoring of general drinking water and domestically polluted river water.

Table 1: Conductivity and temperature values as read from various water samples using the developed sensor system

Water Type	Temperature (°C)			Conductivity (μS)		
	X	Y	% diff	X	Y	% diff
Household water supply	25.18	25.20	0.08	155	158.8	2.39
Ground Water	26.15	26.10	0.19	346	349.0	0.86
Rain Water	24.93	24.93	0.12	17	17.3	1.73
Min. Water A	25.27	25.30	0.12	120	121.7	1.40
Min. Water B	25.18	25.10	0.32	275	278.0	1.08
Min. Water C	25.36	25.4	0.16	268	265.0	1.13
Min. Water D	25.22	25.2	0.08	307	310.0	0.97
Min. Water E	25.28	25.3	0.08	304	301.0	1.00
Min. Water F	25.29	25.3	0.04	250	253.2	1.26
Min. Water G	25.25	25.2	0.20	297	294.0	1.02
Min. Water H	25.36	25.4	0.16	349	347.0	0.58
Coffee	32.81	32.7	0.34	714	718.0	0.56
Tea	30.14	30.1	0.13	519	522.2	0.61
River Water (07.00 am)	25.11	25.2	0.36	1476	1473.0	0.20
River Water (noon)	26.78	26.8	0.07	1523	1521.0	0.13
River Water (17.00 pm)	26.23	26.2	0.11	1597	1594.0	0.19
Sea Water	25.36	25.4	0.16	1982	4565.0	56.58

Acknowledgement

This work was financially supported by the Ministry of Research, Technology, and Higher Education of Indonesia (Kemenristekdikti) under Insinas Project No. 021/P/RPL-LIPI/INSINAS-1/V/2017.

References

[1] Chung, W. –Y. & Yoo, J. –H. (2015), Remote water quality monitoring in wide area. *Sensors and Actuators B Chemical* 217, 51 – 57.

[2] Rusyidi, A. F., Correlation between conductivity and total dissolved solid in various type of water: A review, *IOP Conference Series: Earth and Environmental Science*, Vol. 118, (2018), pp. 012019 (1 – 6), http://dx.doi.org/10.1088/1755-1315/118/1/012019.

[3] Rajashekhar, A. V., Mahender, J. & Prasad, P. B. (2016), Analysis of water quality parameters on Shamirpet lake, Rangareddy district, Telangana state, India. *International Journal of Applied Biology and Pharmaceutical Technology* 7 (4), 163 – 168.

[4] Sophocleous, M. & Atkinson, J. K. (2015), A novel thick-film electrical conductivity sensor suitable for liquid and soil conductivity measurements. *Sensors and Actuators B Chemical* 213, 417 – 422.

[5] Corwin, D. L. & Lesch, S. M. (2005), Application of soil electrical conductivity measurements in agriculture. *Computers and Electronics in Agriculture* 46, 11 – 43.

[6] Schiefelbein, S. L., Fried, N. A., Rhoads K. G. & Sadoway, D. R. (1998), A high-accuracy, calibration-free technique for measuring the electrical conductivity of liquids. *Review of Scientific Instruments* 69, 3308 – 3313.

[7] Zhuiykov, S. (2012), Solid-state sensors monitoring parameters of water quality for the next generation of wireless sensor networks. *Sensors and Actuators B Chemical* 161, 1 – 20.

[8] Lin, Y., Peng, Y. & Di, J. (2015), Electrochemical detection of Hg(II) ions based on nanoporous gold nanoparticles modified indium tin oxide electrode. *Sensors and Actuators B Chemical* 220, 1086 – 1090.

[9] Li, T., Ding, K., Seyfried, W. E. Jr. & Gianchandani, Y. B., A micromachined chemical sensor for sea floor environments: Initial results, *Proceedings of Solid-State Sensors, Actuators and Microsystems Workshop, Hilton Head*, (2012), pp. 173 – 176.

[10] Huang, X., Mowlem, M. C., Pascal, R., Chamberlain, K., Banks, C. & Morgan, H. (2011). A miniature, high precision conductivity and temperature sensor system for ocean monitoring. *IEEE Sensors Journal* 11 (12), 3246 – 3252.

[11] Ciobotaru, I. –A., Benga, F. M., Barbu, O. C., Lazar, G. C., Campureanu, C., Rus, T. & Vaireanu. D. –I. (2016). Conductivity cell constant revisited. *Bulletin of Romanian Chemical Engineering Society* 3 (1), 34 – 46.

[12] Aquadata. Guide to cell constant usable ranges. Available online: http://www.aquasensor.net/category-s/108.htm, last visit: 27.08.2018

[13] Barron, J. J. & Ashton, C. The effect of temperature on conductivity measurement. *Reagecon Technical Paper*, TSP-07 (3), pp. 1 – 5, available online: https://www.camlab.co.uk/originalimages/sitefiles/Tech_papers/TempCondMeas.pdf, last visit: 02.09.2018

[14] Wiranto, G., Hermida, I. D. P., Hiskia, Rama, B. & Rusdiana, D. (2017). Liquid conductivity sensor based on AgPd paste fabricated on an Al_2O_3 substrate using screen printing technique. *Materials Science Forum* 887, 108 – 115.

[15] Ramos, P. M., Pereira, J. M. D., Ramos, H. M. G. & Ribeiro, A. L. (2008). A four-terminal water-quality-monitoring conductivity sensor. *IEEE Transactions on Instrumentation and Measurement* 57 (3), 577 – 583.