International Journal of Engineering & Technology, 7 (4.39) (2018) 356-363

International Journal of Engineering & Technology

Website: www.sciencepubco.com/index.php/IJET

Research paper



Study of AGC in Deregulated Environment using Different Three PID Structures

Sayantan Sinha[1], Ranjan Kumar Mallick[2*], Devranjan Kar[3]

[1]*Department of Electrical Engineering, Siksha O Anusandhan, Odisha , India*
[2]*Department of Electrical and Electronics Engineering, Siksha O Anusandhan, Odisha, India*
[3] *Department of Electrical and Electronics Engineering, Siksha O Anusandhan, Odisha, India*
**Corresponding author E-mail: rkm.iter@gmail.com*

Abstract

The prime initiative of execution of the proposed work gives light to the restructured scenario of the current power sector and its associated load following issues. The focus of the work is mainly directed towards the AGC on an interconnected power system under restructured scenario. Each area focuses on the incorporation of renewable energy sources and therefore consists of a solar unit and a thermal unit as the generating sources. Three different structures of the conventional PID controllers have been taken into consideration for the secondary controller in AGC. The controller gains are optimized by a newly proposed Lightning search Algorithm. The analysis of the superiority of the system is done under two deregulated market scenarios i.e the base case and the bilateral transaction. The system is also subjected to random load changes in area 1 and the system performances under various controller structures are observed and analyzed.

Keywords: *AGC; Deregulated structure; LSA; renewable integration; dynamic performances*

1. Introduction

With a view on the modern power market scenario, maintenance of the frequency is a delicate point of interest and needs to be addressed without further delay. The unwanted variations in frequency in the present day power system mainly arise due to the mismatch between the load demand in a particular area and the generation output. For proper and reliable functioning of the power system, there is an utmost need to minimize the unwanted frequency variations. This minimization is possible by bringing the ACE (Area control error) to zero within the shortest span of time. AGC basically acts as an ancillary service for any power system network by bringing the ACE to zero and maintaining the frequency and the tie line power flow within suitable limits [1-2]. The role of AGC for a unified power system been described in [3]. The age old power unit constitutes of the vertically integrated utility (VIU) which owns mainly generation, transmission and distribution and controls the electricity market be providing power to the customers at regulated rates. However as far as the restructured market is considered, the concept of VIU does not hold good. This implies that the generation, transmission and distribution are not restricted to ensure frequency regulation in a particular area. They being independent participate in the frequency control of adjoining areas too [4].In a nutshell, the restructured environment possesses a decentralized control and the primary job of maintaining the frequency of the unit. Also, another important aspect it acknowledges is the tie line power flow under trifling levels which were entrusted on the Independent System Operators (ISO). ISO (Independent service operator) is an independent participant in the electricity market entrusted with the responsibility of performing AGC along with some ancillary services of the power system.

A vast literature survey has been done in this field and has brought to light many developments for interconnected power system with various LFC issues addressed. Paper [7] incorporates the concept of Automatic generation control in an interconnected power system. After the process of deregulation, the process of AGC in an interconnected power system was dealt in [8]. Paper [9] concentrates on the effect on an interconnected power system after deregulation. The participation of GENCOs and DISCOs in the electricity restructurement scenario was vividly explained in [10]. For a reliable power flow, the inclusion of various FACTs devices was incorporated in the restructured environment as in [11].
Detailed investigation of the aforementioned papers mainly focuses on the use of classical controllers like Proportional integral controllers as the secondary controller to bring the ACE to zero. The mentioned controllers have a great performance and are widely accepted all over the world but for a particular point. When the operating point changes, the PID controllers fail to give desired control action and the gains are again to be manually set using manual hit and trial methods. This process being tiresome and erroneous made the use of these controllers for varied operating points less desirable. As a solution, there is a evolution of various soft computing techniques which provide optimal values of the controller gains under varied operating conditions. Paper [12] deals with the addition of TLBO optimization technique for optimizing controller gains for AGC of an interconnected power system. Hybridization of various soft computing methods for obtaining better controller output was first proposed for a deregulated system in [13].
Paper [14] dealt with the application of craziness based PSO for finding the optimal gains for the controllers for AGC of an interconnected power system. A brief comparison of the system performance under the applications of Cuckoo search algorithm in the proposed 2 DOF controller was proposed in [15]. Paper [16] proposes an innovative quasi-oppositional harmony examining tech-

Copyright © 2018 Authors. This is an open access article distributed under the Creative Commons Attribution License, which permits unrestricted use, distribution, and reproduction in any medium, provided the original work is properly cited.

nique that found its usage in Load frequency control of an isolated hybrid power system. Paper [19] proposes a hybrid firefly-pattern search optimization technique for the automatic generation control of a multi area power system in [19].

All the above works has been done on the application of soft computing methods on the Automatic Generation Control of multi area interconnected power system. To the best of author's knowledge, no substantial amount of work has been done on the design of Optimal PID controller for the AGC of a two area power system consisting of a solar thermal unit and a thermal unit with reheat turbines in each area and connected by a tie-line under the deregulated market environment. In this work the main attention has been given on the study of the control aspect of the PID controller under deregulated environment. A total of three distinguished constructions of the PID controller have been considered in this paper and their gains are tuned by a optimization technique called Lightning search optimization technique. The analysis of the proposed deregulated system is done under two transaction phenomena, each case with a load disturbance SLP of 0.01 pu and a random loading pattern. The dynamic performance of the system in each case is being noted in accordance with the time of settlement, maximum along with minimum overshoot

2. System Proposed

For the Automatic generation control studies of a renewable integrated power system, a solar power integrated binary power system interconnected by tie lines having a maximum power limit of 2000 MW is taken into consideration. Figure 1 depicts the linearized transfer function model of the proposed system. Apart from the renewable sources, each area consists of a traditional reheat thermal plant as a major generating source. The aforesaid model is developed in a restructured environment and therefore includes four Distribution companies for analyzing the various contract cases that exists in a deregulated environment. Figure 2 clearly shows the arrangements of GENCOs and DISCOs in the proposed power system. With an aim of simplification of understanding the contract scenario, we have considered a Distribution Participation Matrix (DPM) as mentioned in Equation (1).

$$\mathrm{DPM}=\begin{bmatrix} cpf_{11} & cpf_{12} & cpf_{13} & cpf_{14} \\ cpf_{21} & cpf_{22} & cpf_{23} & cpf_{24} \\ cpf_{31} & cpf_{32} & cpf_{33} & cpf_{34} \\ cpf_{41} & cpf_{42} & cpf_{43} & cpf_{44} \end{bmatrix} \quad (1)$$

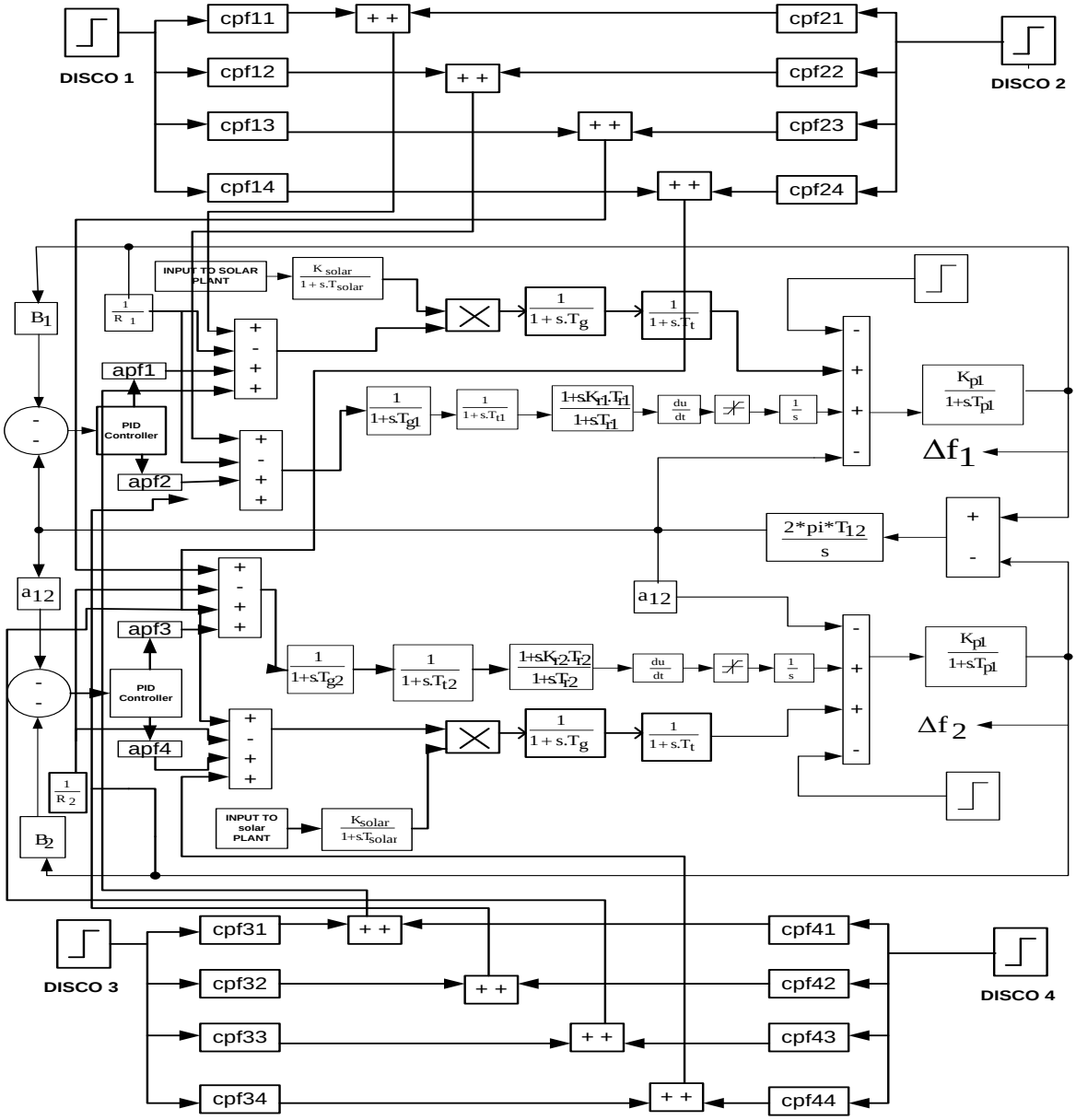

Figure 1: Transfer function model of the proposed system under deregulated environment

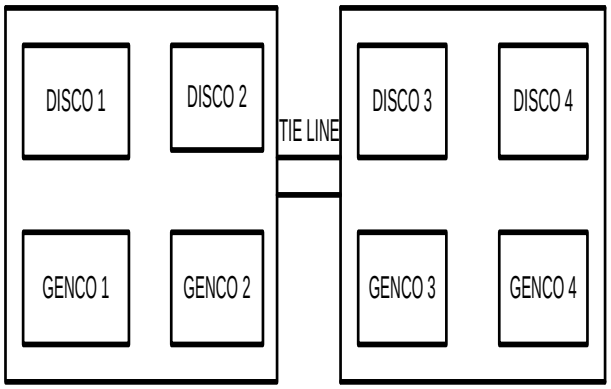

Figure 2: arrangement of DISCOs and GENCOs

When analyzed in a deregulated system, the traditional tie line power flow as in (2) is modified as (3) mentioned below:

$$\Delta P_{tieactual} = \frac{2\pi T_{12}}{s}\left(\Delta f_1 - \Delta f_2\right) \quad (2)$$

$$\Delta P_{tiescheduled} = \sum_{i=1}^{2}\sum_{j=3}^{4} cpf_{ij}\Delta P_{Lj} - \sum_{i=3}^{4}\sum_{j=1}^{2} cpf_{ij}\Delta P_{Lj} \quad .....(3)$$

$$\Delta P_{tiescheduled} = \left[P_{exp1}\right] - \left[P_{imp1}\right] \quad .....(4)$$

where $\lfloor P_{exp} \rfloor$ stands out for the exact power in area 1 that matches with the DISCO demand from area 2. $\lfloor P_{imp} \rfloor$ implies the net power flow in area 1 exactly matching the DISCO demand from area 1.

Tie line error is expressed as:

$$\Delta P_{tieerror} = \Delta P_{tieactual} - \Delta P_{tiescheduled} \quad .....(5)$$

Under this new restructured environment, the Area Control Error (ACE) can be written as:

$$ACE_1 = \beta_1 \Delta f_1 + \Delta P_{tieerror1} \quad .....(6)$$

$$ACE_2 = \beta_2 \Delta f_2 + \alpha_{12}\Delta P_{tieerror2} \quad .....(7)$$

where α_{12} stands for the area size error and β_1 and β_2 stands out as the frequency bias constants of the respective areas. In the proposed system two GENCOs are used and so the Area Control Error has to be divided between all the GENCOs proportional to the contributions for AGC. This sharing of the ACE is governed by a factor termed as the ACE participation factor (apfs). The apfs ensures that the ACE is shared by all the GENCOs and the GENCOs participate on AGC depending on the values of their respective apfs. In the proposed work all the apfs are ensured at a fixed value i.e apf_{s1}=0.5, apf_{t1}=0.5, apf_{t2}=0.5, apf_{s2}=0.5.

When subject to small load perturbations, there is a change in frequency and the ACE is triggered. PID controllers have been used in both the areas to function as a secondary controller and to minimize the Area control error to zero and to reduce the deviations in frequency. In this case three different structures of the PID controllers are proposed and their performance under various transient conditions is noted. The controller gains are tuned by Lightning search algorithm (LSA) for an improved performance

3. Controller Proposed

The role of the secondary controller is to bring the ACE to zero with the minimizing of deviations in frequency and the tie line power. In the proposed work a Proportional Integral Derivative controller (PID) is used to act as a secondary control. Classical PID controllers are of great importance to the industries because of its simplicity, robustness and easy to understand nature. In spite of the dynamic nature of the plants the control scheme provides excellent performance. In this paper three different structure of the PID controller are proposed. The PID controllers take the Area Control Error (ACE) has its input and sends the output signal to the governor.

STRUCTURE 1:

The first structure of the PID controller is depicted in Figure 3.

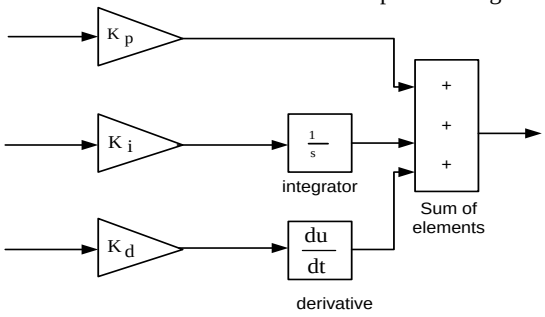

Figure 3: PID structure 3

It takes the ACE as its input and is mathematically expressed in its general form:

$$u_i(t) = K_p ACE_i(t) + K_i \int_0^t ACE_i(t)dt + K_d \frac{dACE_i(t)}{dt} \quad .....(8)$$

The two output signals are divided among the two GENCOs depending on their apf values.

STRUCTURE 2:

The mathematical model of the second PID structure is shown in Figure 4.

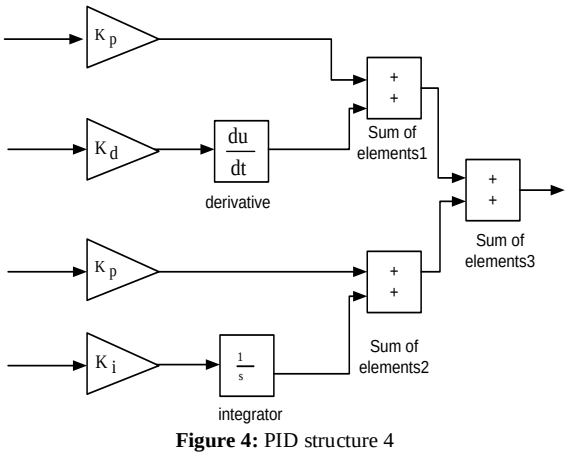

Figure 4: PID structure 4

The mathematical expression of its control scheme can be written as:

$$u_i(t) = (K_p + K_{pi})ACE_i(t) + K_i \int_0^t ACE_i(t)dt + K_d \frac{dACE_i(t)}{dt} \quad ..(9)$$

The two output signals are divided among the two GENCOs depending on their apf values

STRUCTURE 3:
The mathematical model of the third PID structure is denoted in Figure 5.

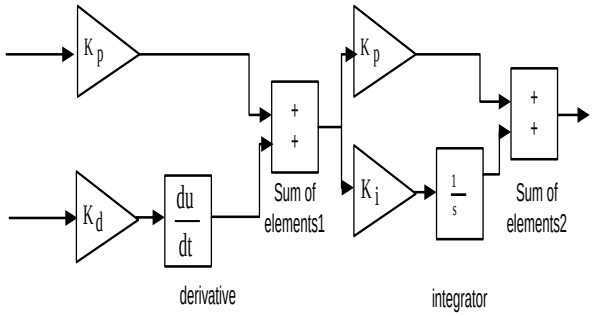

Figure 5: PID structure 3

The mathematical expression of its control scheme can be written as:

$$u_i(t) = \left(K_p ACE_i(t) + K_d \frac{dACE_i(t)}{dt} \right) \left(K_p ACE_i(t) + K_i \int_0^t ACE_i(t)dt \right) ..(10)$$

The two output signals are divided among the two GENCOs depending on their apf values

4. Optimization Technique Proposed

Lightning search Algorithm (LSA):-
Inspired by Lightning principle, this algorithm is designed to propagate the step leader. Lightning can be defined as the rapid electrostatic discharge which takes place amidst a thunderstorm. During thunderstorm charge gets divided usually between the two ends of charges. This process gives rise to an electric field where the free electrons are produced by cosmic radiation are related to oxygen molecules further giving rise to negative ions. LSA uses the concept of lightning which creates fast particles referred to as projectiles. Three projectile types are developed to represent the transition projectiles that create the first step leader population, the space projectiles that attempt to become the leader, and the lead projectile that represent the projectile fired from best positioned step leader. Standard LSA has three different search-methods. They are based on the exponential random behaviour of space projectile, the concurrent formation of two leader tips at fork points using opposition theory and local search by lead projectile. The first population magnitude of this algorithm is denoted by the projectiles. The following equation shows the velocity of the projectile:-

$$V_s = \left[1 - \left(\frac{1}{\sqrt{1 - \left(\frac{v0}{c} \right)^2 - \left(sFr / mc^2 \right)}} \right) \right] .....(11)$$

Where V0=initial velocity of the projectile
m=mass of the projectile
Fr=constant isolation rate
c=speed of the light
s=length of the path travelled
The projectile has lower amount of potential and occupies a large space. Mass is inversely proportional to length. The projectile having lesser potential also has to occupy a large space only when there is less mass and a long path. The algorithm is thus controlled by the relative energy of the step ladder. This alIn this algorithm three types of projectiles are in together. These are
1-Transition projectile
2-space projectile
3-Lead projectile
The first population comprises the transition projectiles. The best position is maintained by the space projectiles and lead projectiles mainly determine the population best.
Transition projectiles can be represented by equation below:-

$$f\left(a^T\right) = \left(\frac{1}{y-x}; y \le x^T \le x \right) \\ 0; a < x; a^T > y \Big) .....(12)$$

where
x=lower boundaries.
y=upper boundaries. Random number of the student = a^T.
N=Random projectiles
The position of the space projectile is calculated from the probability density function as:-

$$f(x^s) = \left\{ \frac{1}{\mu} e^{-x^{\frac{s}{\mu}}}; a \le x^T \le b \right\} \\ 0; x^s \le 0 \Big\} .....(13)$$

μ stands for the shaping parameter that determines the space projectile position.
The position of $P^s i$ called the space projectile can be represented as:

$$P^s i = Pi^s \pm e^{rand(\mu,i))} \quad (14)$$

Similarly the step leader travelling nearest to the ground does not possess enough potential associated with the projectile. The normal probability density function is given by

$$f(x^L) = \frac{1}{\sigma\sqrt{2\pi}} e^{-(x^l-\mu)^2} / 2\sigma^2 .....(15)$$

The result demonstrates that the LSA generally provides better results compared with the other tested methods with a high convergence rate.

5. Application of the Lsa Technique for Agc Problem

The proposed work consists of three different structures of PID controller acting as secondary controllers for AGC of the two area system under restructured environment. The gain constants of the PID controller are tuned by the newly proposed LSA technique. The optimized values of the PID controller gains are given in Table 1. The objective function considered in this case is the Integral Time Absolute error (ITAE). The performance of the proposed system under deregulated scenario is observed and the dynamic performances of the system in terms of dynamic system parameters.

6. Results and Analysis

In the proposed work a two area system has been considered, each area consists of a reheat thermal unit and a solar thermal unit. The two areas are interconnected by a tie line. The PID controller is considered as the secondary controller in this case. Three different PID controller structure is proposed in this paper. The gain constants of each PID controller are optimized with the help of a newly accepted Optimization Technique called the Lightning Search algorithm (LSA). The minimization function taken in this case is the ITAE (Integral time absolute error)

$$J = \int_0^t \left(|\Delta f_1| + |\Delta f_2| + |\Delta p_{tie}| \right) dt \text{.....(16)}$$

The performance of the system is observed under a deregulated environment. Two different transaction scenarios are taken into consideration. For each case the performance of the three different PID structures are noted for a load perturbation of 0.01pu SLP. The transient performance of the system in terms of settling time, maximum and minimum overshoot is noted.

CASE 1: BASE CASE

Let us consider a case where all the GENCOs equally participate in the Automatic Generation Control (AGC). This means that the ACE participation factor is equally divided between all the GENCOs. This fixes the apf value at 0.5 for each case. System is subjected to an SLP of 0.01pu. The distribution participation matrix can be written as:

$$\text{DPM} = \begin{bmatrix} 0.5 & 0.5 & 0 & 0 \\ 0.5 & 0.5 & 0 & 0 \\ 0 & 0 & 0 & 0 \\ 0 & 0 & 0 & 0 \end{bmatrix} \quad (17)$$

DISCOs of area 3 and area 4 doesnot demand any power from the GENCOs of respective areas and hence the 3rd and 4th column of the DPM is kept empty. The DISCOs demand the power from their local GENCOs which means the DISCOs 1 and 2 demand the power from GENCOs 1 and 2 respectively. Figure 6 to Figure 12 clearly indicates the frequency deviation of each area, the tie line power flow and the swing of the generated powers from each GENCOs on account of a step demand in DISCOs 1 and 2. From the figures the effectiveness of the PID structure 3 is well distinguished. The 3rd structure of the PID controller minimized the swing in frequency faster and brings them to a zero steady value as compared to PID structures 1 and 2.

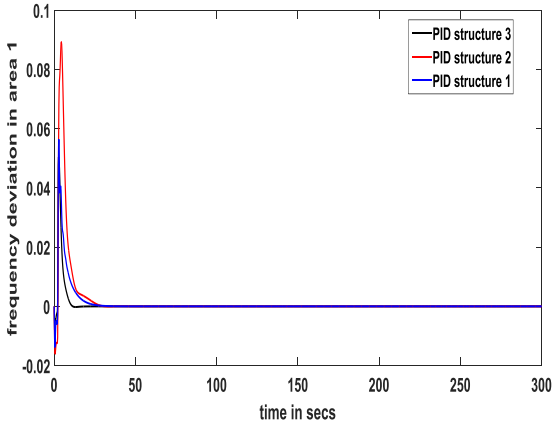

Figure 6: variation of frequency in area 1

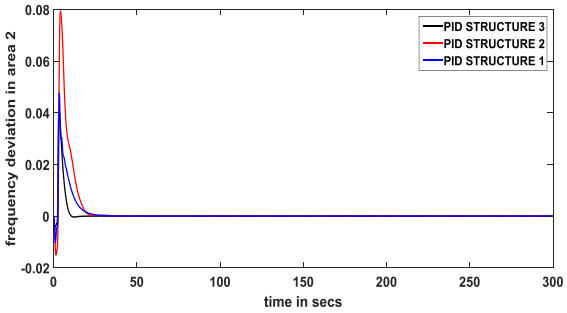

Figure 7: variation of frequency in area 2

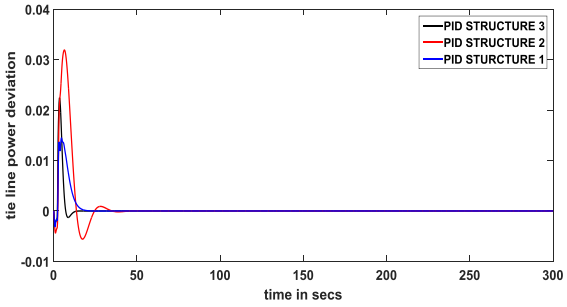

Figure 8: tie line power deviation

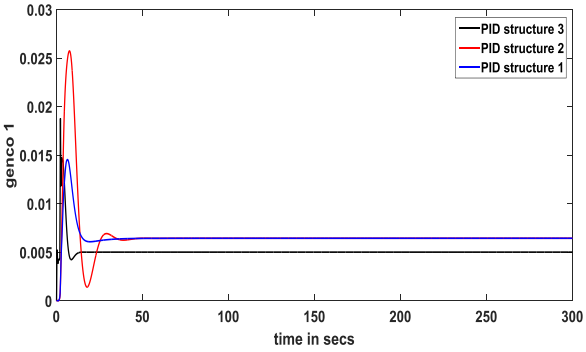

Figure 9: Deviation in the generation of GENCO 1

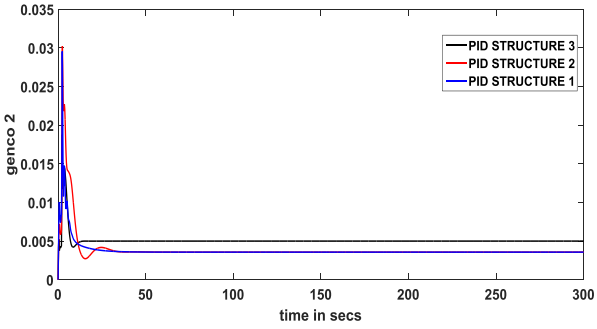

Figure 10: Deviation in the generation of GENCO 2

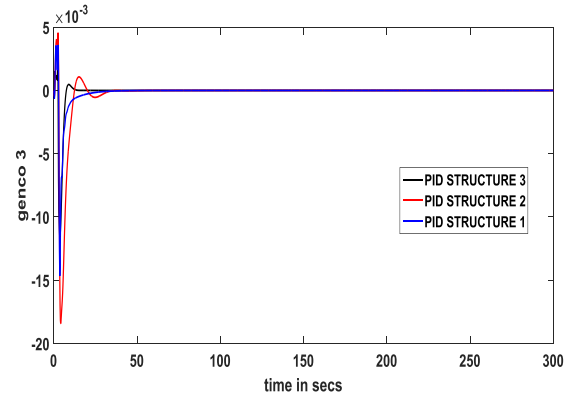

Figure 11: Deviation in generation of GENCO 3

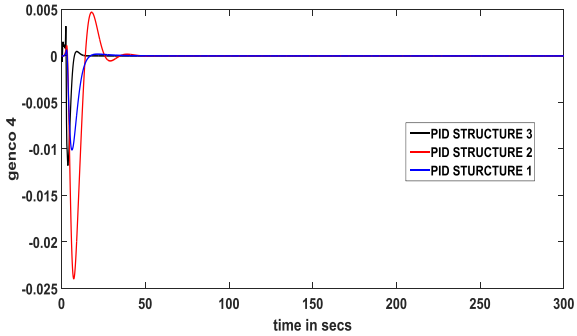

Figure 12: Deviation in generation of GENCO 4

From the above figures (Figure 9,10,11 and 12) it can be clearly inferred that as the load demand of area 1 (an SLP of 0.01) is to be met by DISCO1 and DISCO2, the GENCOs of area 1 need to supply 0.005 pu of the total demand. The above mentioned figures clearly show that the LSA optimized PID structure 3 is capable of bringing the GENCO demand to 0.005 pu after the shortest time possible. As the GENCOs of area 2 doesnot participate in the current transaction scenario, their deviations area minimized and brought to zero at the shortest time possible by the PID structure 3. The analysis is further extended by an application of a random loading pattern in area 1 as shown in Figure 13. Figure 14 and figure 15 depict the frequency deviations of area 1 and area 2 respectively.

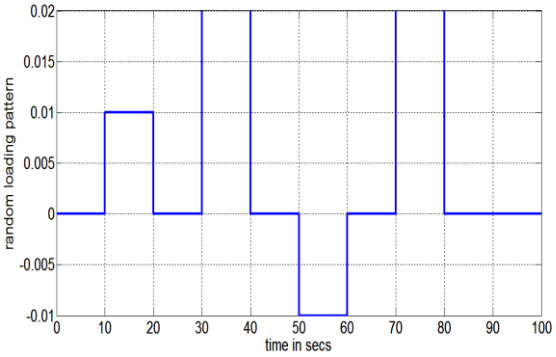

Figure 13: Random load pattern

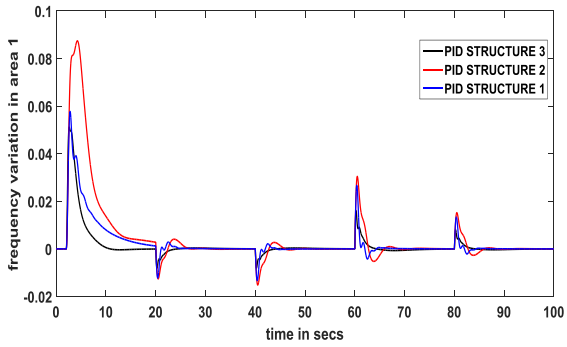

Figure 14: variation in frequency in area 1 due to random load perturbations in area 1

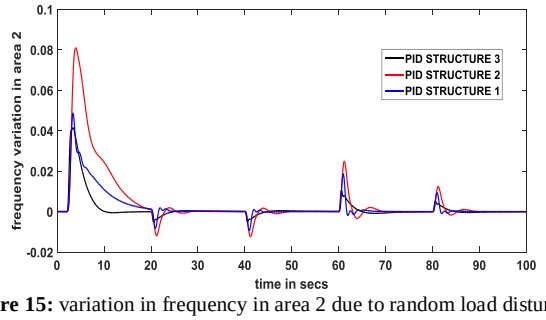

Figure 15: variation in frequency in area 2 due to random load disturbance in area 1

The transient performance of the system is also studied in terms of system dynamic performances. Table (1) clearly depicts that the PID structure 3 has a better performance as the secondary controller when employed for the AGC of a proposed two area system under restructured environment. Figures 14 and 15 clearly show that the response time of the PID structure 3 is much more faster than structure 1 and 2. This establishes the effectiveness of the PID structure 3 as compared to the other two.

CASE 2:

A bilateral market is considered in this case. The market contract is expressed as:

$$DPM = \begin{bmatrix} 0.5 & 0.25 & 0 & 0.3 \\ 0.2 & 0.25 & 0 & 0 \\ 0 & 0.25 & 1 & 0.7 \\ 0.3 & 0.25 & 0 & 0 \end{bmatrix} \ldots \quad (25)$$

A load demand of 1 MW has been fixed for each DISCO. The diagonal elements signify the self-contract between the GENCO and DISCO of same area. The remaining members of the DPM indicate the bilateral contract market. This case also considers the system to be subjected to a slp of 0.01pu. Figure 16 to figure 22 depicts the frequency deviation of each area, the tie line power flow and the swing of the generated powers from each GENCOs on account of a step demand of all the DISCOs.

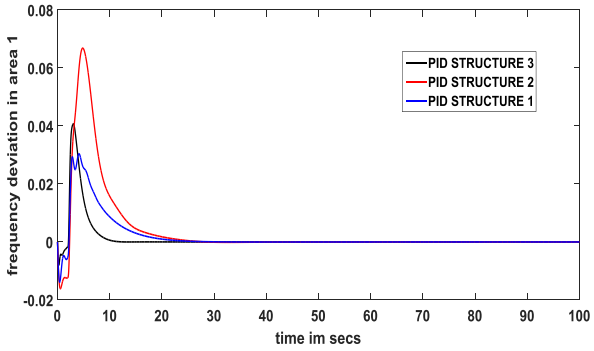

Figure 16: frequency deviation in area 1 due to SLP 0.01 pu in area 1

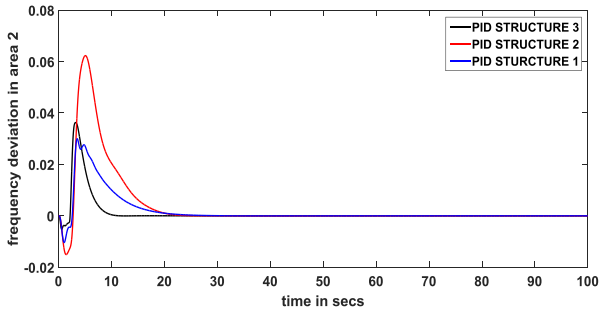

Figure 17: frequency deviation in area 2 due to SLP 0.01 pu in area 1

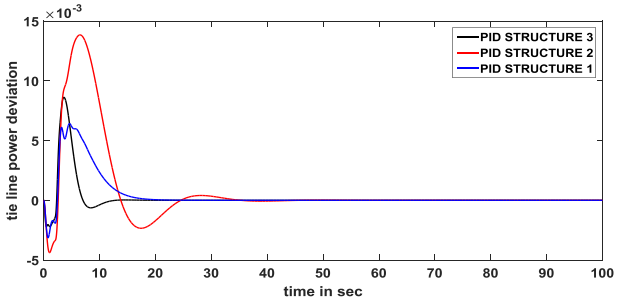

Figure 18: tie line power deviation

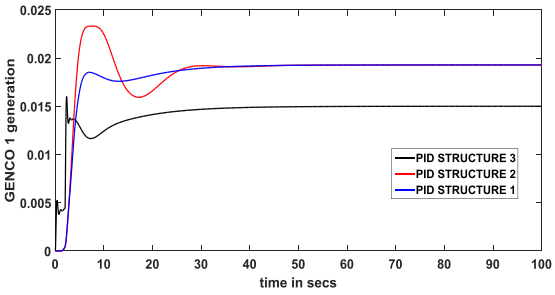

Figure 19: GENCO 1 power output

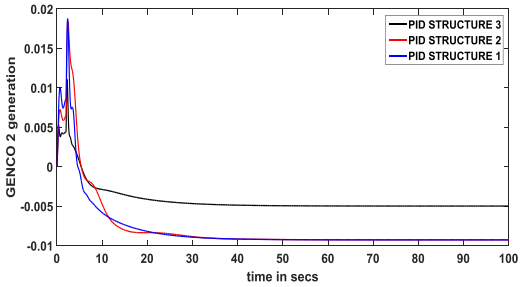

Figure 20: GENCO 2 power output

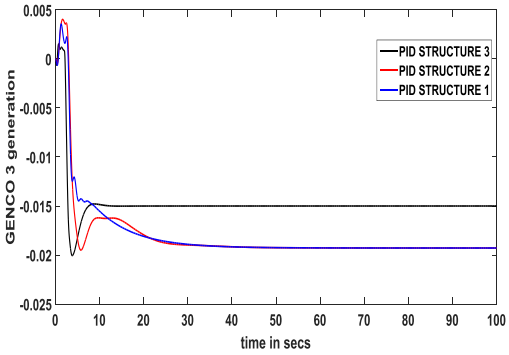

Figure 21: GENCO 3 power output

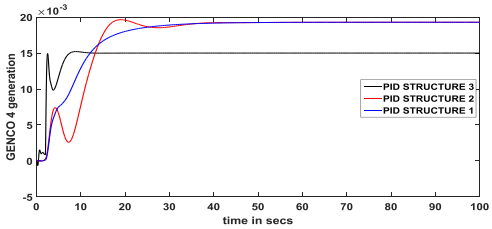

Figure 22: GENCO 4 power output

Figures 16, 17 and 18 clearly shows that the deviations in the frequency and the tie line power are brought to zero much more faster by PID structure 3 as compared to structure 1 and 2. The analysis is also extended by an application of a random loading pattern in area 1. Figure 23 and Figure 24 depicts the frequency deviations of area 1 and area 2 respectively. Table 1 clearly portrays that the settling time, maximum and minimum overshoot values are the minimum for PID structure 3 and hence the PID structure 3 can be inferred to have a better performance as the secondary controller in the AGC of the proposed two area system.

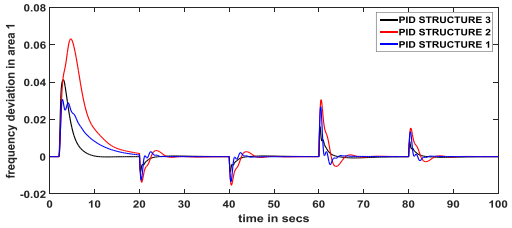

Figure 23: variation of frequency in area 1 due to random loading pattern

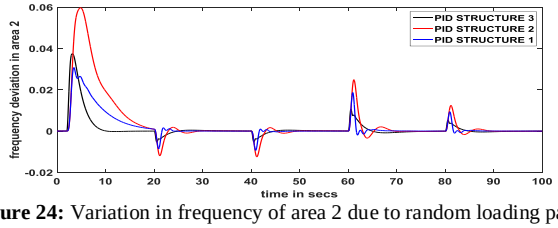

Figure 24: Variation in frequency of area 2 due to random loading pattern

Table 1: Optimized System parameters

CASE 1(BASE CASE)						
	Kp1	Ki1	Kd1	Kp2	Ki2	Kd2
PID Structure 1	0.9701	1.4968	1.1644	1.0298	1.5488	0.5816
PID Structure 2	1.1547	1.9556	0.9443	0.3941	0.4548	1.3041
PID Structure 3	1.3969	1.5813	1.2304	1.8152	1.8477	0.8163
CASE 2 (BILLATERAL TRANSACTION)						
	Kp1	Ki1	Kd1	Kp2	Ki2	Kd2
PID Structure 1	2.000	1.6078	1.8699	1.3282	1.2112	0.5040
PID Structure 2	1.1716	2.0000	0.963	0.3996	0.4952	1.3667
PID Structure 3	1.9193	1.6052	1.3454	1.9054	1.4478	1.2120

Table 2: Transient performance data of the system under the two cases of deregulation when subjected to a SLP of 0.01 pu in area 1

CASE 1: BASE CASE			
PID STRUCTURE 1			
	SETTLING TIME	MAXIMUM OVERSHOOT	MINIMUM UNDERSHOOT
Δf_1	20.6013	0.0564	-0.0139
Δf_2	21.6754	0.0417	-0.0104
Δp_{tie}	17.2410	0.0154	-0.0031
PID STRUCTURE 2			
	SETTLING TIME	MAXIMUM OVERSHOOT	MINIMUM UNDERSHOOT
Δf_1	22.9594	0.0893	-0.0161
Δf_2	19.2775	0.0794	-0.0151
Δp_{tie}	30.7871	0.0319	-0.0056
PID STRUCTURE 3			
	SETTLING TIME	MAXIMUM OVERSHOOT	MINIMUM UNDERSHOOT
Δf_1	9.8333	0.0504	-0.0080

Δf_2	9.6844	0.0405	-0.0052
Δp_{tie}	11.2555	0.0224	-0.0022
CASE 2: BILLATERAL TRANSACTION			
PID STRUCTURE 1			
	SETTLING TIME	MAXIMUM OVERSHOOT	MINIMUM UNDERSHOOT
Δf_1	21.9708	0.0304	-0.0139
Δf_2	22.1338	0.0300	-0.0104
Δp_{tie}	17.7396	0.0064	-0.0031
PID STRUCTURE 2			
	SETTLING TIME	MAXIMUM OVERSHOOT	MINIMUM UNDERSHOOT
Δf_1	21.3252	0.0668	-0.0161
Δf_2	19.5839	0.0623	-0.0151
Δp_{tie}	30.9801	0.0139	-0.0044
PID STRUCTURE 3			
	SETTLING TIME	MAXIMUM OVERSHOOT	MINIMUM UNDERSHOOT
Δf_1	9.6507	0.0407	-0.0080
Δf_2	9.4959	0.0363	-0.0052
Δp_{tie}	11.0756	0.0086	-0.0022

7. Conclusion

The proposed work considers a binary system integrated with renewable sources of energy and connected together by a tie line. The system is made to operate in the deregulated energy structure. Three different structures of the PID controllers are employed and Lightning Search algorithm is used to calculate the optimized controller gains. Simulation of the proposed system has been done under different deregulated market environment and the results significantly indicate the PID Structure 3 is very efficient and forces the deviations in the frequency and the tie line power to zero in a comparatively shorter time to the other two. The robustness of the PID controllers is also indicated in terms of dynamic system performances under a load disturbance of 0.01 pu. The robustness of the system is further strengthened by applying a random load pattern in area 1. A proper observation of the values will clearly give us an idea about the supremacy and robustness of the PID structure 3 as compared to structures 1 and 2.

References

[1] Kundur, Prabha, Neal J. Balu, and Mark G. Lauby. Power system stability and control. Vol. 7. New York: McGraw-hill, 1994.

[2] Bevrani, Hassan. Robust power system frequency control. Vol. 85. New York: Springer, 2009.

[3] Elgerd, Olle Ingemar. "Electric energy systems theory: an introduction." (1982).

[4] Kumar, Prabhat, and Dwarka P. Kothari. "Recent philosophies of automatic generation control strategies in power systems." IEEE transactions on power systems 20.1 (2005): 346-357.

[5] Pandey, Shashi Kant, Soumya R. Mohanty, and Nand Kishor. "A literature survey on load–frequency control for conventional and distribution generation power systems." Renewable and Sustainable Energy Reviews 25 (2013): 318-334.

[6] Shayeghi, H. A. S. H., H. A. Shayanfar, and A. Jalili. "Load frequency control strategies: A state-of-the-art survey for the researcher." Energy Conversion and management 50.2 (2009): 344-353.

[7] Bhatt, Praghnesh, Ranjit Roy, and S. P. Ghoshal. "Optimized multi area AGC simulation in restructured power systems." International Journal of Electrical Power & Energy Systems 32.4 (2010): 311-322.

[8] Donde, Vaibhav, M. A. Pai, and Ian A. Hiskens. "Simulation and optimization in an AGC system after deregulation." IEEE transactions on power systems 16.3 (2001): 481-489.

[9] Shayeghi, Hossein. "A robust decentralized power system load frequency control." Journal of Electrical Engineering 59.6 (2008): 281-293.

[10] Christie, Richard D., and Anjan Bose. "Load frequency control issues in power system operations after deregulation." IEEE Transactions on Power systems 11.3 (1996): 1191-1200.

[11] De Tuglie, Enrico, and Francesco Torelli. "Load following control schemes for deregulated energy markets." IEEE Transactions on Power systems 21.4 (2006): 1691-1698.

[12] Chidambaram, I. A., and B. Paramasivam. "Optimized load-frequency simulation in restructured power system with redox flow batteries and interline power flow controller." International Journal of Electrical Power & Energy Systems 50 (2013): 9-24.

[13] Mohanty, Banaja. "TLBO optimized sliding mode controller for multi-area multi-source nonlinear interconnected AGC system." International Journal of Electrical Power & Energy Systems 73 (2015): 872-881.

[14] Panda, Sidhartha, and Narendra Kumar Yegireddy. "Automatic generation control of multi-area power system using multi-objective non-dominated sorting genetic algorithm-II." International Journal of Electrical Power & Energy Systems 53 (2013): 54-63.

[15] Panda, Sidhartha, Banaja Mohanty, and P. K. Hota. "Hybrid BFOA–PSO algorithm for automatic generation control of linear and nonlinear interconnected power systems." Applied soft computing 13.12 (2013): 4718-4730.

[16] Gozde, Haluk, and M. Cengiz Taplamacioglu. "Automatic generation control application with craziness based particle swarm optimization in a thermal power system." International Journal of Electrical Power & Energy Systems 33.1 (2011): 8-16.

[17] Dash, Puja, Lalit Chandra Saikia, and Nidul Sinha. "Comparison of performances of several Cuckoo search algorithm based 2DOF controllers in AGC of multi-area thermal system." International Journal of Electrical Power & Energy Systems 55 (2014): 429-436.

[18] Tarkeshwar, Mahto, and Vivekananda Mukherjee. "Quasi-oppositional harmony search algorithm and fuzzy logic controller for load frequency stabilisation of an isolated hybrid power system." IET Generation, Transmission & Distribution 9.5 (2015): 427-444.

[19] Sahu, Rabindra Kumar, Sidhartha Panda, and Saroj Padhan. "A hybrid firefly algorithm and pattern search technique for automatic generation control of multi area power systems." International Journal of Electrical Power & Energy Systems 64 (2015): 9-23