International Journal of Engineering & Technology, 7 (4.39) (2018) 350-355

International Journal of Engineering & Technology

Website: www.sciencepubco.com/index.php/IJET

Research paper

Small Signal Stability Enhancement of a Wind Energy Integrated Power System by UPFC Optimal Damping Controller

Narayan Nahak[1], Ranjan Kumar Mallick[2] Rajan Kumar Pandey[3], Md. Mumtazun Nabi[4], , Dibyasha Panigrahi[5], Arup Samal[6]

[1]Dept. of Electrical Engineering, ITER, Siksha 'O' Anusandhan (Deemed to be University), Bhubaneswar, India.
[2,] Professor, Dept. of Electrical&Electronics Engineering, ITER, Siksha 'O' Anusandhan (Deemed to be University), Bhubaneswar, India.
**Corresponding author E-mail: rkm.iter@gmail.com*

Abstract

This work presents a dual optimal PI controller based on UPFC for the purpose of enhancing stability of small signals of a power system integrated with wind energy source. The parameters of controller are tuned by PSO-GWO algorithm. System responses have been obtained with varying wind penetration to power system and for different operating conditions detail eigen value analysis is performed. The results predict that, variable wind power penetration deteriorates dynamic stability of power system and proposed UPFC controller can damp system oscillations much effectively ac compared to PSO and GWO optimized single PI controller

Keywords: *FACTS, UPFC, dual PI controller, SMIB, VSC,small signal stability*

1. Introduction

For a long time, dynamic stability of a power system has been a major issue challenging the way of operating the system.Due to inter connection power system network this issue has been more challenging subject to different disturbances and weak tie line inter connection between different power system networks.The modern power system network is becoming more complex after being integrated with renewable power sources. Different aspects have been addressed in literature regarding interconnection of wind power sources with conventional power source. In [1-4] the effect of wind energy on small signal stability of power system has been presented, where it has been predicted that varying wind generation has more detrimental effect on dynamic stability of power system. In this work the dynamic stability is attributed to low frequency power system oscillation. As per literature so many black outs the power systems are initiated by power system oscillations.PSS has been used for decades to damp power systembut, the demerit of PSS lies on large change in voltage profile, not capable to meet sudden disturbances and operation in lead power factor.On the other hand, FACTS based PSS are becoming more popular due to several reasons like easy online tuning, flexibility in operation [5-10] but UPFC is most effective FACTS controller and has merits of both series and shunt connected FACTS controller [11,12]. For dynamic stability study Heffron- Philipp's transfer function model with UPFC has been very much popular as per researches [13]. PI controller is very simple,efficient and able to lead the system very quickly to zero steady state error so in this work UPFC based two parallel PI controllers are employed for dynamic stability enhancements of power system. The two parallel PI controllers are employed to alter modulation index and phase angle of series voltage source converter and shunt voltage source converter respectively, thereby it is mentioned as dual PI controller in this article. The next issue is efficient online tuning of UPFC based dualPI controller. The online optimization of controller parameter requires an efficient optimization technique[14].In the recent years artificial intelligent based optimization technique have been used to tune UPFC controller parameter. These optimization techniques can be of swarm intelligence or evolutionally algorithm type like DE, PSO, DEPSO, GWO, adaptive PSO, DE-GWO,GA-GSA etc [15-21]. PSO has so many merit points, but it may trap in local optima subject to a heavy constraint problem and GWO has very good balance between exploration and exploitation. So the hybridization of PSO and GWO technique is implemented here to tune controller parameter.

2. Power System With UPFC

The SMIB system is integrated from wind power source. The generator has been IEEE-ST1A type excitation system. Two voltage source converters (VSCs) which are constituted in the UPFC are connected in between the generator and the infinite bus. These two VSCs comprises of one series connected and the another is connected in shunt with the line. UPFC consists of four control actions which are modulation index of series VSC (mB), phase angle of series VSC (δB), modulation index of shunt VSC (mE) and phase angle of shunt VSC (δE).

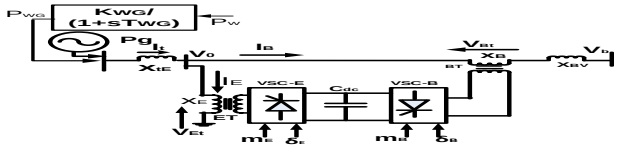

Fig.1: SMIB system integrated with wind power generation

Copyright © 2016 Authors. This is an open access article distributed under the Creative Commons Attribution License, which permits unrestricted use, distribution, and reproduction in any medium, provided the original work is properly cited.

3. Dynamic Model Of The System Including Upfc

3.1. Non-Linear Model

The non-linear model of only SMIB system with UPFC can be presented as [13].

$$\dot{\omega} = \left(\frac{P_i - P_e - D\Delta\omega}{M}\right) \quad (1)$$

$$\dot{\delta} = \omega_0(\omega - 1) \quad (2)$$

$$\dot{E'}_q = (-E_q + E_{fd})/T'_{d0} \quad (3)$$

$$\dot{E}_{fd} = \left[-E_{fd} + K_a(V_{ref} - V_t)\right]/T_a \quad (4)$$

$$\dot{V}_{dc} = \frac{3m_E}{4C_{dc}}\left(I_{Eq}\sin\delta_E + I_{Ed}\cos\delta_E\right) + \frac{3m_B}{4C_{dc}}\left(I_{Bq}\sin\delta_B + I_{Bd}\cos\delta_B\right) \quad (5)$$

Balance of active power between the series VSC and shunt VSC is given as:

$$Re(V_B I_B^* - V_E I_E^*) = 0 \quad (6)$$

Linear DynamicModel

The non-linear model is linearized around initial operating condition for better analysis of small signal stability.Following are the equations obtained after linearization [13].

$$\Delta\dot{\delta} = \omega_0\Delta\omega \quad (7)$$

$$\Delta\dot{\omega} = \left(\frac{-\Delta P_e - D\Delta\omega}{M}\right) \quad (8)\ \Delta\dot{E}_q = (-\Delta E_q + \Delta E_{fd})/T_{d0} \quad (9)$$

$$\Delta\dot{E}_{fd} = \left[-\Delta E_{fd} + K_a(\Delta V_{ref} - \Delta V_t)\right]/T_a \quad (10)$$

$$\Delta V_{dc} = K_7\Delta\delta + K_8\Delta E'_q - K_q\Delta V_{dc} + K_{ce}\Delta m_E + K_{c\delta e}\Delta\delta_E + K_{cb}\Delta m_B + K_{c\delta b}\Delta\delta_B \quad (11)$$

Where,

$$\Delta P_e = K_1\Delta\delta + K_3\Delta E'_q + K_{pd}\Delta V_{dc} + K_{pe}\Delta m_E + K_{p\delta E}\Delta\delta_E + K_{pb}\Delta m_B + K_{p\delta b}\Delta\delta_B \quad (12)$$

$$\Delta E_d = K_4\Delta\delta + K_3\Delta E'_q + K_{qd}\Delta V_{dc} + K_{qe}\Delta m_E + K_{q\delta_E}\Delta\delta_E + K_{qb}\Delta m_B + K_{q\delta_B}\Delta\delta_B \quad (13)$$

$$\Delta V_t = K_5\Delta\delta + K_6\Delta E'_q + K_{vd}\Delta V_{dc} + K_{ve}\Delta m_E + K_{v\delta E}\Delta\delta_E + K_{vb}\Delta m_B + K_{v\delta b}\Delta\delta_B \quad (14)$$

4. Modelling of Wind Turbine

Wind turbine characteristics can be concluded by the below equation of the power coefficient C_p.

$$C_P = (0.44 - 0.0167\beta_p)\sin\left[\frac{\pi(\lambda_p - 3)}{15 - 0.3\beta_p}\right] - 0.0184(\lambda_p - 3)\beta_p \quad (15)$$

Where,λ_p is the ratio of tip speed and $\beta_p$represents the angle of blade pitch [9].
Further, λ_p is given by:

$$\lambda_p = \frac{R_b\omega_b}{V_W} \quad (16)$$

Where, R_b is the blade radiusand ω_b is the angular blade speed. Here, radius and angular speed of the blade are considered to be 23.5m and 3.14rad/s respectively.
Power generated by wind turbine is given as:

$$P_w = (1/2)\rho_a A_s C_p V_W^3 \quad (17)$$

Where ρ_a and A_s are density of air and swept blade area respectively. Fig.2 represents the characteristics curve of power generated by the wind turbine when consideringρ_a=1.25kg/m^3 and A_s=1735m^2. Fig.3 shows the model of wind power generator in transfer function form. By the transfer function model, we come to conclusion that the power generator system is given in Eq-18 as:

$$G_{WG} = \frac{K_{WG}}{1+sT_{WG}} = \frac{\Delta P_{WG}}{\Delta P_W} \quad (18)$$

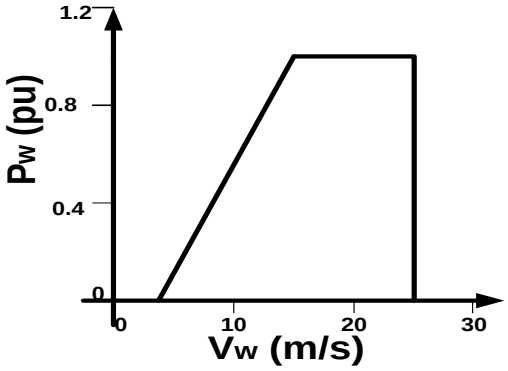

Fig.2: Curve forpower generated by wind turbine versus speed of wind

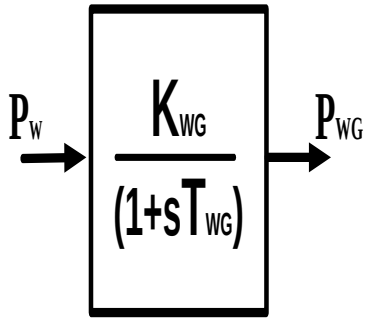

Fig.3: Transfer function model of wind generator system

5. Small Signal Model of Single Machine System Including Upfc

The Heffron Philips transfer function model of single machine power system including UPFC is shown in Fig.4 [13].The 'K' constants of this model are calculated with reference to initial operating condition and system parameters[13]. Here [ΔU] is the input vector, [K_{vu}], [K_{qu}], [K_{cu}], [K_{pu}] are the governing parameters of the model where [ΔU] = [$\Delta m_E \Delta\delta_E \Delta m_B \Delta\delta_B$]^T Input vectors are given by ,

[K_{pu}] = [$K_{pe}K_{p\delta e}K_{pb}K_{p\delta b}$], [$K_{vu}$] = [$K_{ve}K_{v\delta e}K_{vb}K_{v\delta b}$],
[K_{qu}] = [$K_{qe}K_{q\delta e}K_{qb}K_{q\delta b}$], [$K_{cu}$] = [$K_{ce}K_{c\delta e}K_{cb}K_{c\delta b}$]

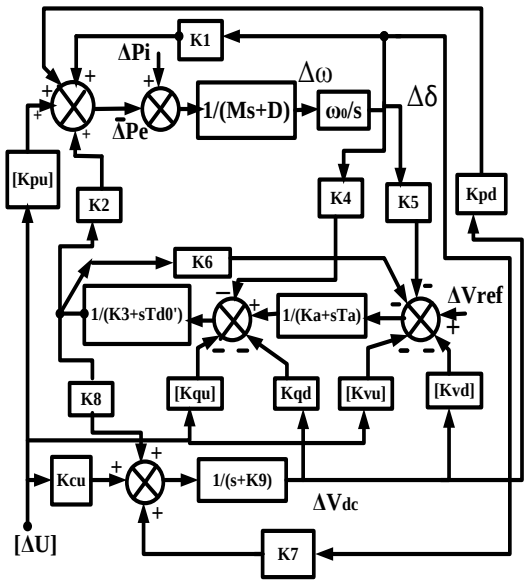

Fig.4: Modified Heffron-Phillips model including UPFC

6. Proposed Cascaded PI with Dual Damping Controller Structure

Initially the PI controller puts the system into zero steady state error and it also yields very fast response. For damping oscillations, m_B and δ_E are best suitable UPFC actions [19].Both these actions are simultaneously applied in the parallel PI controller as depicted in Fig. 5. In this controller Kdp1 and Kdp2 are the parameters of modulation index of series VSC of UPFC. So on Kdp3 and Kdp4 are parameters of shunt VSC of UPFC. The input to controller is speed deviation of generator and output is the controller actions to be performed.

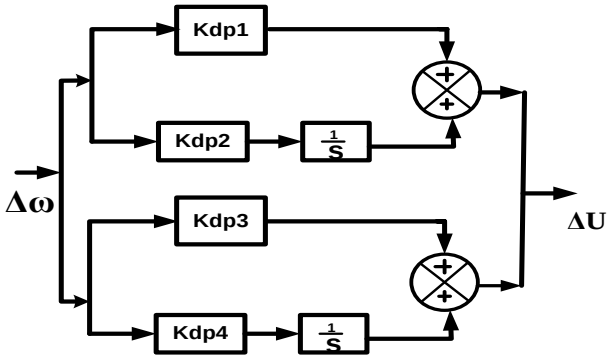

Fig.5: The dual PI controller

7. Objective Fuction

To damp oscillations in power system ITAE based objective function is considered in this work [14] and the speed deviation signal Δω has been considered for input to controller. J is the objective functiongivenas :

$$J = \int_0^{tsim} t|\Delta\omega|\, dt \tag{19}$$

The problem is minimizing J subject to the constraints of gains and time constants of controller. The gains range has been chosen from 1 to 100 and time constants from 0.01 to 1.

8. Pso Algorithm Overview

PSO optimization is very useful technique used to optimize complicated numerical functions in multi dimensions. It's very simple and easy to code. This algorithm allows the number of particles to move in multi dimensions and during the course of searching the velocity of each particle is updated[20].

9. Grey Wolf Optimizer (Gwo)

The Grey wolf technique indicates the behavior of a self-organized system. This technique is recently published, it is a swarm intelligence type multiobjective algorithm. This technique has been aped by the way Grey Wolves run down their prey [15]. The alphas make hunting decisions. The betas help the alphas in decision making and other activities. Then come the omegas, lowest ranking.
When the hunting process begins, they encircle the prey, which is mathematically formulated as:

$$\vec{D} = \left|\vec{C}.\vec{X}_P(t) - \vec{X}(t)\right| \tag{20}$$

$$\vec{X}(t+1) = \vec{X}_p(t) - \vec{A}.\vec{D} \tag{21}$$

Here, t indicates current iteration,
$\vec{A}$ and $\vec{C}$ value can be considered by Eq-22 and 23 as

$$\vec{A} = 2.\vec{a}.\vec{r}_1 - \vec{a} \tag{22}$$

$$\vec{C} = 2.\vec{r}_2 \tag{23}$$

For initializing the hunting process, it is assumed that α , β and δ wolves know the exact position of prey and the current position of these wolves are updated by the following equations:

$$\vec{D}_\alpha = \left|\vec{C}_1.\vec{X}_\alpha - \vec{X}\right|, \vec{D}_\beta = \left|\vec{C}_2.\vec{X}_\beta - \vec{X}\right|, \vec{D}_\delta = \left|\vec{C}_3.\vec{X}_\delta - \vec{X}\right| \tag{24}$$

$$\vec{X}_1 = \vec{X}_\alpha - \vec{A}_1.(\vec{D}_\alpha), \vec{X}_2 = \vec{X}_\beta - \vec{A}_2.(\vec{D}_\beta), \vec{X}_3 = \vec{X}_\delta - \vec{A}_3.(\vec{D}_\delta) \tag{25}$$

To find the best location of prey, an average value of current position of α, β and δ wolves is taken as:

$$\vec{X}(t+1) = \frac{\vec{X}_1 + \vec{X}_2 + \vec{X}_3}{3} \tag{26}$$

10. Hybrid Pso-Gwo Technique

PSO technique has several merit points like simple, robust to variation in parameter and easy to implement. But it has its demerits also. One of the demerits known is that itgetstrapped in local optima subjected to application of optimization problem that is highly constrained. To nullify the demerits of PSO, GWO comes to action. Having a better balance in exploration and exploitation GWOavoids getting trapped in local optima.
Hence PSO and GWO are combining approached for better optimization results. The steps for PSO-GWO techniques are presented below and flow chart is given Fig.6.

Hybrid PSO-GWO Technique

PSO Operation

i. Fitness function is evaluated
ii. Pbest and Gbest are obtained individually and globally respectively.
iii. Each swarm velocity is found out.
iv. Updating Swarm position
v. With objective function, fitness values are obtained for each particle.

vi. Selection of best solution is done for next iteration subjected to fitness values.

GWO Operation

vii. Initial population for GWO is considered as the final population with PSO.
viii. Initializing of parameters, A, C and a.
ix. Each search agent is allocated random position.
x. Objective function returns the fitness values for Grey Wolves.
xi. Position and parameters (A, C and a) are updated.
xii. For further iteration, best function is chosen after comparing between the fitness functions.
xiii. Values for X_α, X_β, and X_δ are updated
xiv. Repetition of Steps (ii) to (xiii) is done until the stopping criterion is satisfied.

Finally, the optimal controller parameters are achieved

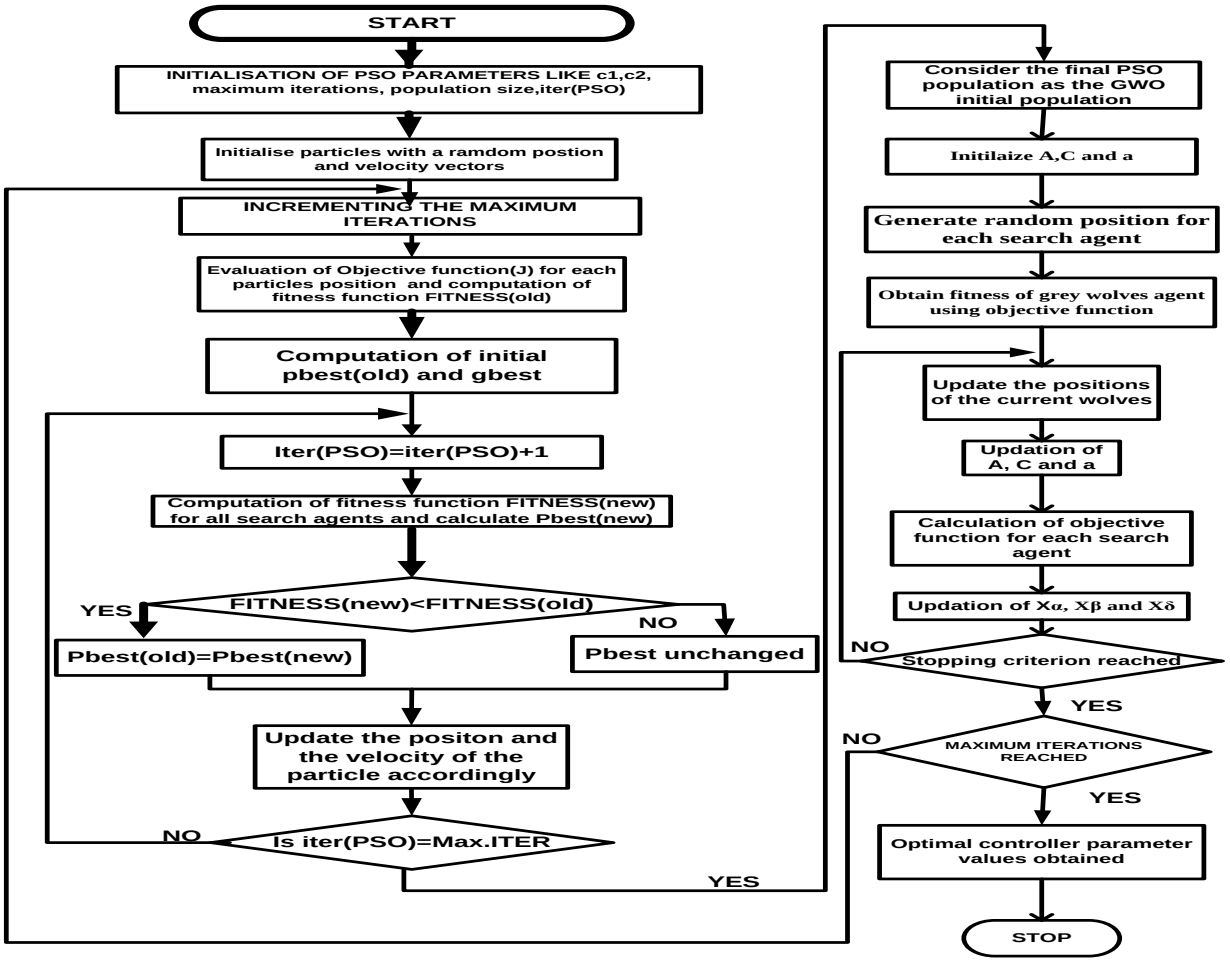

11. Result and Discusion

The UPFC based dual PI controller is employed in this research to damp low frequency oscillations of variable wind power integrated power system to enhance dynamic stability of power system. The k-constants of transfer function model of SMIB system including UPFC have been calculated subject to initial operating condition as presented in the appendix.Tuning the parameters of the dual PI controllers are done by PSO, GWO and PSO-GWO algorithms. Two different case studies have been presented in this work. In case-1, The generated output power of synchronous generator, Pg=0.9 pu and wind source output
power Pw=0.1pu have been considered. In case-2, The generated output power of synchronous generator, Pg=0.8 pu and wind source output power Pw=0.4 pu, are considered, in which case the generator output power is decreased and wind source output power is raised to observe the oscillatory system response. The speed deviation and real output power deviation of generator for case-1 is given in Fig.7 and Fig.8 respectively. Similarly speed deviation and real output power deviation of generator for case-2 is presented in Fig.9 and Fig.10 respectively. The Table-1 presents optimized parameter and Table-2 presents system eigen values subject to heavy wind penetration. From system response and eigen value analysis it is observed that, PSO-GWO optimized UPFC dual PI controller damps system oscillations heavily as compared to PSO and GWO optimized PI controller.

Table-1: Parameters for dual PI controller after optimization

Dual PI controller parameters				
Algorithms	**Kdp1**	**Kdp2**	**Kdp3**	**Kdp4**
PSO	**49.6276**	**0.1017**	**27.7806**	**0.1765**
GWO	**27.1009**	**0.5071**	**42.0508**	**0.1979**
PSO-GWO	**52.6423**	**0.6961**	**83.4817**	**0.4940**

Table-2: Eigen values of system with dual PI controller

PSO (dual PI)	**GWO(dual PI)**	**PSO-GWO**	**NO CONTROL**
-99.8334	**-99.8331**	**-99.8323**	**-99.8338**
-1.6938 + 3.6647i	**-2.1775 + 3.4384i**	**-99.8323**	**-0.0019 + 4.0961i**
-1.6938 - 3.6647i	**-2.1775 - 3.4384i**	**-5.8207**	**-0.0019 - 4.0961i**
-0.5858	**-0.4884**	**-2.7974**	**-0.0018**
-0.0017	**-0.0018**	**-0.4972**	**-0.0018**
0.0000	**-0.0000**	**0.0000**	**-0.4819**
-0.0000	**-0.0000**	**-0.0000**	**0**
0	**0**	**0**	**0**
-0.5457	**-0.5556**	**-0.5556**	**0**
			-0.5556

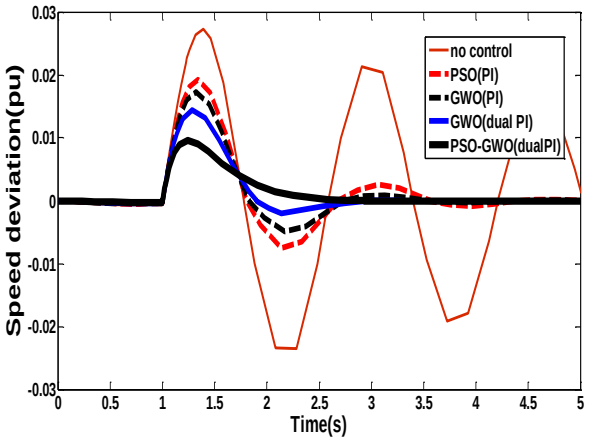

Fig.7: Speed deviation for case-I, Pw=0.1 pu

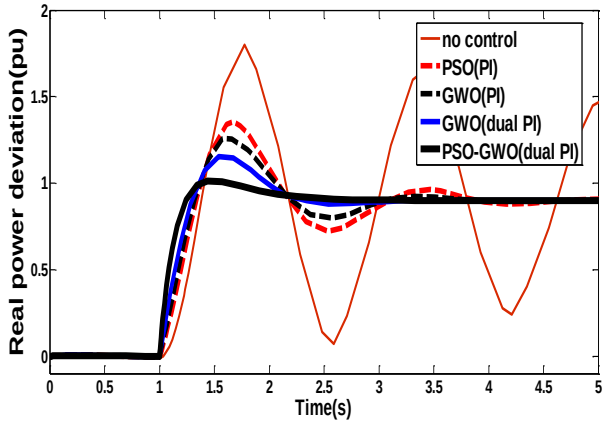

Fig.8: Real power deviation for case-I, Pw=0.1pu

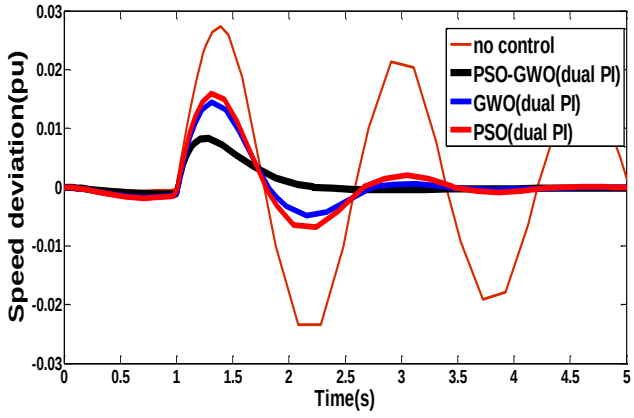

Fig.9: Speed deviation for case-I, Pw=0.4 pu

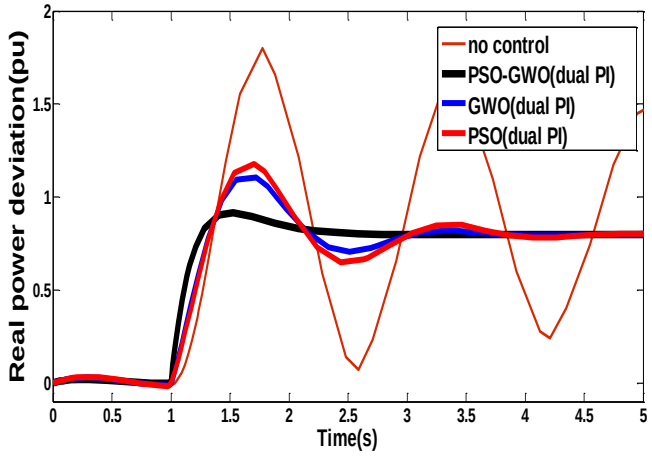

Fig.10: Real power deviation for case-I, Pw=0.1 pu

12. Conclusion

This work presents PSO-GWO optimized dual PI controller based on UPFC to damp low frequency oscillations of wind power integrated power system. The power system oscillatory response has been examined with variable wind power generation with PSO, GWO, PSO-GWO optimized both single and dual PI controller. When it comes to damping the system oscillations, by observing the eigen values and response of the system, it can be concluded that the controller, proposed in the article, performs better as compared to PSO, GWO optimized single PI controller thereby enhancing dynamic stability of power system.

Reference

[1] Shi, L.B.; Wang, C.; Yao, L.Z.; Wang, L.M.; Ni, Y.X. Analysis of impact of grid-connected wind power on small signal stability. *Wind Energ.* 2011, *14*, 518–537.

[2] Slootweg, J.G.; Kling, W.L. The impact of large scale wind power generation on power system oscillations. *Electr. Power Syst. Res.* 2003, *67*, 9–20.

[3] Sanchez-Gasea, J.J.; Miller, N.W.; Price, W.W. A Modal Analysis of a Two-Area System with Significant Wind Power Penetration. In Proceedings of the Power Systems Conference and Exposition, New York, NY, USA, 10–13 October 2004.

[4] S.Lamichhane, N. Mithulanananthan. Possible impact of large scale wind energy integration on small signal stability. Power and Energy Engg. Conf(APPEEC), IEEE PES Asia-Pacific.Nov-2015

[5] Zhang P, Messina AR, Coonick A, Cory BJ Selection of locations and input signals for multiple SVC damping controllers in large scale power systems. In:Proceedings of IEEE power engineering society winter meeting, paper IEEE-0-7803-4403-0, p. 667–70. 1998

[6] Farsangi MM, Song YH, Lee KY(2004)Choice of FACTS devices control inputs for damping inter area oscillations. IEEE Trans Power Syst 19(2):1135–43.

[7] Nahak N., Sahoo S.R., Mallick R.K., Small signal stability enhancement of power system by Modified GWO optimized UPFC based PI-lead-lag controller, SOCPROS, AISC springer, vol-817, 2019

[8] Zhao Q, Jiang J, Robust SVC controller design for improving power system damping. IEEE Trans Energy Conver (10):201–9.1995

[9] Martins N, Lima LTG, Determination of suitable locations for power system stabilizers and static VAR compensators for damping electromechanical oscillations in large scale power systems. IEEE Trans Power Syst,5:1455–69,1990.

[10] Pourbeik P, Gibbard MJ, Damping and synchronizing torques induced on generators by FACTS stabilizers in multimachine power systems. IEEE Trans Power Syst.11:1920–5, 1996

[11] Nahak N, Mallick R.K, "Enhancement of small signal stability of power system using UPFC based damping controller with novel optimized fuzzy PID controller" Journal of Intelligent & Fuzzy Systems, vol.35, no.1, 501-512, 2018.

[12] R.K. Pandey, N.K. Singh, UPFC control parameter identification for effective power oscillation damping, Electrical Power and Energy Systems 31, 269–276,2009.

[13] Wang HF,A unified model for the analysis of FACTS devices in damping power system oscillations – part III: unified power flow controller.IEEE Trans Power Deliver.15(3):978–83,2000

[14] Taher SA, Hemmati R, Abdolalipour A, Akbari S. Comparison of different robust control methods in the design of decentralized UPFC controllers. Int J Electr Power Energy Syst2012;43:173–84.

[15] N. Nahak, R.K. Mallick, Damping of power system oscillations by a novel DE-GWO optimized dual UPFC controller, Eng.Sci.Tech., Int. J. Volume 20, Issue 4(2017), pp 1275-1284.

[16] Husam I. Shaheen, Ghamgeen I. Rashed, S.J. Cheng. Optimal location and parameter setting of UPFC for enhancing power system security based on Differential Evolution algorithm, Int J Electr Power Energy Syst 2011, 33: 94–105

[17] Mallick, R.K., Nahak, N. Hybrid differential evolution particle swarm optimization (DE-PSO) algorithm for optimization of unified power flow controller parameters,IEEE, UPCON-IIT BHU-2016, art. no. 7894729, pp. 635-640.

[18] Rajendra Ku Khadanga ,Jitendriya Ku Satapathy, A new hybrid GA–GSA algorithm for tuning damping controller parameters for a

unified power flow controller, Electrical Power and Energy Systems 73 (2015) 1060–1069

[19] Nahak N, Bohidar S, Mallick R.K, "Investigation of UPFC based Damping controller parameter and a novel multi input dual controller with time delay for multi machine system by Grey-Wolf Optimizer" International review of automatic control. Vol 11, No 1 (2018)

[20] Shayeghi H, ShayanfarHA,JalilzadehS,SafariA,Design of output feedback UPFC controller for damping of electromechanical oscillations using PSO. Energy Conversion and Management 50, 2554–2561,2009.

[21] Eslami M, Shareef H, Taha MR, Khajehzadeh M, Adaptive particle swarm optimization for simultaneous design of UPFC damping controllers. Int J Electr Power Energy Syst.57:116–28,2014.