International Journal of Engineering & Technology, 7 (4.39) (2018) 346-349

International Journal of Engineering & Technology

Website: www.sciencepubco.com/index.php/IJET

Research paper



An Innovative Approach of Multi-Focus Image Fusion Using SWT and Content Adaptive Blurring

Tapasmini Sahoo*[1], Richa Acharya[2], Kunal Kaumar Das[3]

Department of Electronics and Communication Engineering, ITER, Siksha 'O' Anusandhan (Deemed to beUniversity)
**Corresponding author E-mail: tapasminisahoo@soa.ac.in*

Abstract

This paper depicts a stationary wavelet transformation based image fusion technique in association with content adaptive blurring. The fusion technique combines multiple images of the same scene with different resolution, intensity to get a combined image with more suitability for extracting features which is difficult to find from an image in various modalities. The performance and relative importance of the proposed fusion technique is investigated by some statistical evaluation measures. The values of the statistical measure suggests that the execution of the proposed strategy is appreciable. It likewise improves the visual impact.

Keywords: *Multi-focus image, Content Adaptive Blurring.*

1. Introduction

In the area of data fusion multi-focus image fusion has turned to be a vital research [1]. Image fusion technique is a very important part of image processing. In this technique, multi-focus imageries of the identical sight are taken to have a resultant which shows more information of the sight than the distinct input imageries [2]. Thus the informative resultant image is further carried for some post processing such as 'image segmentation', 'feature extraction' and 'object recognition'. The resulted fused image in which each pixel is resolved by arranging pixels in different sources and expands the valuable data content of a scene with the end goal that the execution of segmentation, feature selection and extraction can be made strides. Image fusion has wide application in biomedical image processing, computer vision, remote sensing, robotics and microscopic imaging [2].

Generally data fusion is categorized into three levels such as feature level fusion, decision level fusion and pixel level fusion. These fusion levels have distinct algorithms with various applications. In Feature level fusion feature extraction is a prerequisite and then the fusion algorithm is applied on each input image based on the extracted features. The Symbol level fusion enables data of different source imageries to be utilized successfully at most elevated amount of deliberation. Usually the input imageries are independently handled for abstraction of valuable information and characterization. Throughout the decades, Pixel-level fusion has pulled in an immense arrangement of research consideration [2].

Various multi-focus fusion strategies were projected in previously. In light of their area, the methodologies are sorted into two categories: transform and spatial area methods [3]. Transform domain combination techniques are exceptionally well known in the previous years as they are proved as more natural methodology towards the issue. Usually the combination techniques in transform domain is carried out in three stages: (i) the input imageries from 'spatial domain' are changed over into 'transform domain'. (ii) Thereafter as per the specific fusion rule the transform coefficients are intertwined to get compound coefficients, lastly these compound coefficients are again retrieved back in spatial space to get the melded picture [1]. DWT, SWT and other pyramid based deterioration are the examples of such changes.

Usually high research efforts is received in spatial domain image fusion. Thus as a result various fusion algorithms are evolved which is directly operated on the source images without changing their representation [1].These techniques apply a combination rule on the images to yield a well-focused image. The fusion techniques in spatial space fuse source imageries using locally selected features, for example angle, recurrence, and local standard inference [3].

The transformation specified in this paper can be called undecimated wavelet transform or stationary wavelet transform (SWT). The stationary wavelet transform (SWT) is like a discrete wavelet transform (DWT) yet the distinction is that SWT does not perform down sampling of the image between the levels of hierarchy. Hence the sub-images resulted after the decomposition process have the have indistinguishable resolution from the original images.

The proposed novel fusion approach combines the efficacies of both discrete wavelet transformation and Content Adaptive Blurring (CAB) methods.

The paper is systematized as: In section 2, there is brief introduction on content adaptive blurring algorithm. Section 3 deals with the novel fusion approach and eventually the simulated results are illustrated in section 4.

2. Content Adaptive Blurring

The CAB is a block-based obscuring technique incites obscure on a pixel just if the neighbourhood eminence around that pixel isn't corrupted underneath a specified threshold [1]. Spatial space obscuring is generally resulted by convolution of a smoothing kernel with the input image. If I_s be the original source multi-focus image, and I_{bl} the obscured image obtained by the convolution

Copyright © 2018 Authors. This is an open access article distributed under the Creative Commons Attribution License, which permits unrestricted use, distribution, and reproduction in any medium, provided the original work is properly cited.

process by a weighted average smoothing filter in a trivial neighbourhood in I_s .

$$I_{bl}(s,t) = \sum_{i=-p}^{p}\sum_{j=-p}^{p} w_{i,j} I_s(s+i,t+j) \quad (1)$$

w justifies the smoothing kernel of size (2p+1)x(2p+1) . w is a symmetric kernel around the selected pixel.
According to the Content Adaptive Blurring (CAB) method given a variable focus image, the CAB obscures it using (1) and determines region based mostly correlated coefficient between the initial image and the obscured image by the following expression (2).

$$\hat{\rho}_{bl,s}(s,t) = \sum \frac{w_{i,j}\sigma_s(s+i,t+j)}{\sigma_{bl}(s,t)} \rho_{bl,s}(s+i,t+j) \quad (2)$$

Where $\rho_{bl,s}$ is the correlation between the blocks r_s and r_{bl} and is calculated as follows

$$\rho_{bl,s} = \sum_{i=1}^{m}\sum_{j=1}^{n} \frac{(r_{bl}(s+i,t+j)-\mu_{bl})(r_s(s+i,t+j)-\mu_s)}{\sigma_{bl}\sigma_s} \quad (3)$$

$$\text{with } \sigma_{b,l} = \sqrt{\sum_{i=1}^{m}\sum_{j=1}^{n}(r_{bl}(s+i,t+j)-\mu_{bl})^2} \quad (4)$$

$$\sigma_s = \sqrt{\sum_{i=1}^{m}\sum_{j=1}^{n}(r_s(s+i,t+j)-\mu_s)^2} \quad (5)$$

μ_s , $\mu_{b.l}$ are the means of block r_s and r_{bl} respectively.
A threshold λ is selected and the block having correlation not as much as λ have shown critical quality loss. The content of the image at these regions is re-established once again by the source image and thereafter further obscuring is exempted in the following cycle. The algorithm takes into consideration a multi-focus image Is, with block size (m, n) as input.

3. Proposed Novel Fusion Approach

The proposed approach combines the detailed informative data of both the two source imageries and conserves their spectral characteristics. In the proposed method; pixel level fusion is carried out. Figure 2 illustrates a framework for the proposed fusion based on SWT and Content Adaptive Blurring.

- Initially both the registered input images are transformed by SWT , and we get approximate details with low frequency, $A^{\alpha}A(2^i;p,q)$, $A^{\alpha}B(2^i;p,q)$ and $D^{\alpha}A(2^i;p,q)$, $D^{\alpha}B(2^i;p,q)$, as high frequency detail parts, i signifies the greatest disintegration level, α=1,2,3,4……. four deterioration portions of the specific goals **.**
- Then, content adaptive blurring algorithm is applied on every individual detail coefficients independently by taking each detail high recurrence sub-imageries as an individual block.
- Let Aα and Bα are referred as the αth detail sub-image blocks of the two source images A and B respectively.
- Thereafter the non-uniformly blurred images Ib,1and Ib,2 are resulted using CAB technique and their absolute difference Id,1 and Id,2 with equivalent input images is determined.

$$I_{d,1} = \left|I_{o,1} - I_{b,1}\right|$$
$$I_{d,2} = \left|I_{o,2} - I_{b,2}\right| \quad (6)$$

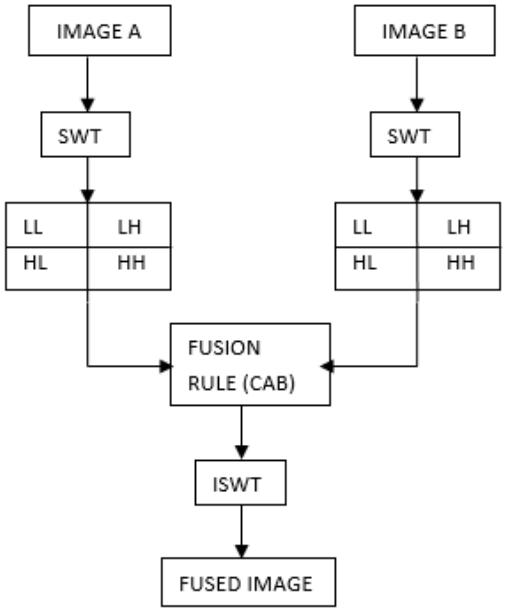

Fig. 1: Proposed novel fusion approach

The decision maps $I_{m,1}$ and $I_{m,2}$ are the focused regions found by thresholding the difference map images obtained in the previous step are used to incorporate the input images $I_{o,1}$, $I_{o,2}$ to get the fused image as per the ensuing rule::

$$I_f(p,q) = \begin{cases} \dfrac{I_{o,1}(p,q)I_{m,1}(p,q) + I_{o,2}(p,q)I_{m,2}(p,q)}{\lambda} & if \lambda > 0 \\ \dfrac{I_{o,1}(p,q) + I_{o,2}(p,q)}{2} & otherwise \end{cases} \quad (7)$$

Where

$$\lambda = I_{m,1}(p,q) + I_{m,2}(p,q) \quad (8)$$

and the low frequency approximate part is

$$F^{\alpha}(2^i;p,q) = w_1 A^{\alpha}A(2^i;p,q) + w_2 A^{\alpha}B(2^i;p,q) \quad (9)$$

Where, w1, w2 are two constants chosen in such a way that w1+w2=1.
Ultimately the final image was resulted by applying inverse SWT transformation on the fused image.

4. Experimental Result and Performance Comparison

In the proposed approach of fusion two multi-focused input images are considered. The source images are co-registered in such a way that pixel alignment in both the images will be area specific. Thereafter the two registered images are taken care by the proposed fusion approach as shown in fig 1. The quantitative analysis of the proposed method is analyzed on 4 pairs of diverse source imageries, of size 512x512 namely, A, B, C and D as shown in fig.

2, 3; fig. 6, 7;fig. 10,11 and fig. 14, 15 respectively. The result obtained by the proposed method is presented in fig 5 9,13 and 17, and the result of content adaptive blurring method is presented in fig. 4, 8, 12 and 16 for A, B, C and D respectively. PSNR, correlation coefficient and deviation constants are some chosen statistical parameters whose value evaluates the performance of the fusion algorithm. The brief description of the selected parameters are as follows

4.1 Peak Signal to Noise Ratio (PSNR)

Qualitative analysis for the resulted fused image is usually assessed by visual analysis and PSNR is measured here to quantify it. PSNR is dependent on RMSE, which can be determined as

$$RMSE = \sqrt{\frac{\sum_{s=1}^{p}\sum_{t=1}^{q}\left[R_i(s,t) - F_i(s,t)\right]}{p \times q}} \tag{10}$$

Where, the standard reference image is expressed as Ri and the resultant image of the fusion process as Fi.

$$PSNR = 10 \times \ln\left(\frac{Pix_{\max} \times Pix_{\max}}{RMSE^2}\right) \tag{11}$$

Pix_{max} is the maximum pixel value from the dynamic range of the resultant image. Consequently, higher value of PSNR, suggest an improved process of fusion.

4.2 Deviation Index (DI):

It is determined as per the following expression

$$DI = \frac{1}{p \times q}\sum_{i=1}^{p}\sum_{j=1}^{q}\frac{\left|I_R(i,j) - I_F(i,j)\right|}{I_R(i,j)} \tag{12}$$

The gray level value of the uniformly focused image and the fused image at the location (i,j) is represented as I_R and I_F respectively. As a result, lower the value of DI, suggest an improved fusion process.

4.3. Correlation Coefficients (CC):

It is determined from the following defined expression

$$CC(F,R) = \frac{\sum_{i,j}\left|(I_F(i,j) - \mu_F) \times (I_R(i,j) - \mu_R)\right|}{\sqrt{\sum_{i,j}(I_F(i,j) - \mu_F)^2 \times \sum_{i,j} I_R(i,j) - \mu_R)^2}} \tag{13}$$

It measures the similarity between the resulted fused image and the reference image Where, $I_F(i,j)$, $I_R(i,j)$ justifies the intensity at the location (i,j) of the two fused and reference images . μ_F and μ_R is the mean of the two images F and R respectively



Fig 2: Left focused A image



Fig 3: Right focused A image



Fig 4:CAB based fused image



Fig 5: Proposed fused image



Fig 6: Left focused B image



Fig 7: Right focused B image



Fig 8:CAB based fused image



Fig 9: Proposed fused image



Fig 10 : Left focused C image



Fig 11: Right focused C image



Fig 12:CAB based fused image



Fig 13: Proposed fused image

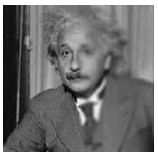

Fig 14: Left focused D image

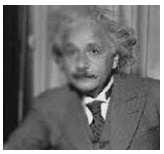

Fig 15: Right focused D image

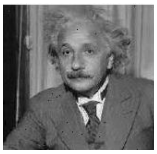

Fig 16: CAB based fused image

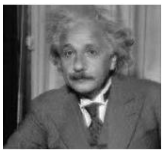

Fig 17: Proposed fused image

Table 1: Performance statistical parameters of images

Image Name	Method	PSNR	Correlation coefficient	Deviation index
A	Wavelet (SWT)	19.086	0.765	0.4956
	CAB	22.2238	0.9090	0.0943
	Proposed Method	33.1341	0.9924	0.0287
B	Wavelet (SWT)	16.1642	0.6722	0.6140
	CAB	18.7423	0.8274	0.1651
	Proposed Method	29.8153	0.9874	0.0847
\	Wavelet (SWT)	20.3304	0.6558	0.1263
	CAB	24.4775	0.8719	0.0482
C	Proposed Method	32.1998	0.9804	0.0333
D	Wavelet (SWT)	21.0212	0.7088	0.4848
	CAB	21.4339	0.8560	0.1617
	Proposed Method	29.2408	0.9769	0.0838

5. Conclusion

The suggested process conserves the spectral characteristics of the resulted uniformly focused fused image. The approach integrates qualitatively the spatial details of the two source images. The quantitative evaluation metric illustrates that the proposed technique of image fusion is value-added significantly as compared to alternative existing ways.

References

[1] Muhammad Shahid farid, Arif Mahmood, Somaya Ali Al-Maadeed, Information fusion: Multi-focus image fusion using Content Adaptive Blurring, Information Fusion 45 (2019) 96-112.

[2] Tapasmini Sahoo, Sankalp Mohanty,Saurav Sahu, Multi-focus Image Fusion Using Variance Based Spatial Domain and Wavelet Transform, International Conference on Multimedia, Signal Processing and Communication Technologies, 2011,48-51

[3] A.A. Goshtasby, S. Nikolov, Image fusion: advances in the state of the art, Information Fusion 8 (2)2007) 114-118.

[4] N. Mitianoudis, T. Stathaki, Pixel-based and region- based image fusion schemes using ICA bases, Information Fusion 8 (2) (2007) 131–142.

[5] P.T. Burt, E.H. Andelson, The Laplacian pyramid as a compact image code, IEEE Transactions on Communications 31 (4) (1983)532-540.

[6] Toet, A morphological pyramidal image decomposition, Pattern Recognition Letters 9 (3) (1989) 255–261.

[7] H. Li, B. Manjunath, S. Mitra, Multisensor image fusion using the wavelet transform, Graphical Models and Image Processing 57 (3) (1995) 235–245.

[8] G. Pajares, J. Cruz, A wavelet-based image fusion tutorial, Pattern Recognition 37 (9) (2004) 1855–1872..

[9] B. Yang, Z.L. Jing, Image fusion using a low-redundancy and nearly shift invariant discrete wavelet frame, Optics Engineering 46(10) (2007) 107002.

[10] V.S. Petrovic, C.S. Xydeas, Gradient-based multiresolution image fusion, IEEE Transactions on Image Processing 13 (2) (2004) 228–237

[11] M. Beaulieu, S. Foucher, L. Gagnon, Multi-spectral image resolution refinement using stationary wavelet transform, in: Proceedings of the International Geoscience and Remote Sensing Symposium, 1989, pp.4032–4034.

[12] .T. Li, J.T. Kwok, Y.N. Wang, Discrete wavelet frame transform method to merge Landsat TM and SPOT panchromatic images, In formation Fusion 3 (1) (2002) 17–23.

[13] J.J. Lewis, R.J. Ocallaghan, S.G. Nikolov, Pixel- and region-based image fusion with complex wavelets, Information Fusion 8 (2) (2007)119–13