International Journal of Engineering & Technology, 7 (4.39) (2018) 286-290

SPC

International Journal of Engineering & Technology

Website: www.sciencepubco.com/index.php/IJET

Research paper



Comparative Analysis of Thermal and Hydraulic Performance of PHE and S&T Heat Exchanger during Pasteurization of Mango Juice using Nano Fluid.

Pankaj Kesari[1], Debashis Dey[2], Dr. Sikata Samantaray[3*]

[1]Research scholar ,Siksha 'O' Anusandahan (Deemed to be University),BBSR,Odisha
[2 3] Faculty, Siksha 'O' Anusandahan (Deemed to be University),BBSR,Odisha
**Corresponding author E-mail: sikatasamantaray@soa.ac.in*

Abstract

Food industries including dairy units, fruits and beverages industries are frequently exposed to thermal processing inside heat- exchangers. Today, the vital demands for any food and beverages industries are fluids having high heat transfer characteristics, low pumping power, easy cleaning surfaces and hygienic operations. In foodstuff process industries these necessities are often met by different heat exchanger typically, plate- heat exchanger and the shell & tube heat -exchanger are widely used. A comparative study of performance of plate-heat exchanger (PHE) and shell & tube heat -exchanger (S&T HE) using Al_2O_3/distilled water nanofluid during the thermal processing of mango juice is done. The heat exchanging fluids employed here are nanofluid acting as hot fluid and mango juice as cold fluid. The experiment is carried out at constant cold fluid inlet temperature i.e. 20°C with varying inlet temperature of hot fluids (50, 55, 60 and 65°C) and varying volume flow rates (4, 5, 6 and 7LPM) for three nanoparticle concentrations (0.1, 0.2 and 0.3% by weight). Experimental results confirms that the Plate-heat exchanger (PHE) have high heat flux increment which is twice that of shell & tube heat -exchanger (S&T HE) with lower pressure drop. The S&T HE have higher pressure drop compared to the PHE i.e. 36 times at low flow rate and 40 times at higher volume flow rate The enhancement of Nu number in PHE is 39% than that of S&T HE.

Keywords:

1. Introduction

Reducing the consumption of energy, maintaining the nutritional value, quality and texture of different fruit juices and dairy products are the vital demands of the food industries. To achieve the above requirements of the food industry the utilization of nanofluid in the heat exchanger during thermal processing of fruit juices and dairy products is done. A comparative study of the performance of heat exchangers using nanofluid is essential to choose an appropriate heat exchanger according to the requirement of food industry.

The thermal processing is an effective process to prevent the microbial spoilage of juices and maintaining its nutritional value and quality. Pasteurization is a kind of thermal processing that destroys harmful microorganisms in foods and beverages. Pasteurization of fruit juices are mainly done by heating with batch or continuous method in food industry. This thermal process may be done before or after packaging the product in the container. In batch pasteurization, specific amounts of the product are processed in steel jacketed vessels. The nonstop pasteurization is done by passing the juices through heat -exchangers. Pasteurization by done with high temperature and short time (HTST) is the usual process being used in the thermal treatment of juices currently. In this treatment, the usual temperature and time are 76.6–87.7°C and 25–30 seconds, respectively. Applying heat to the static fluid will reduces the quality, nutritional value, texture, taste and odour etc. So mainly thermal processing in flow condition i.e. continuous pasteurization is preferred over batch pasteurization.

Plate-heat exchanger (PHE) consists of number of thin corrugated plates having gap between each other providing a path for fluid flow for heat transfer. PHE was initially employed for the pasteurizations of liquid food, where hygiene is highly concerned. While, today the PHE has wide range of applications in food and chemical unit due to compact, a huge surface- area to volume ratio which can be improved according to the requirement by adding and removing number of plates, hygienic operations, the ease of cleaning and advances in material technology. There is a limitations in the maximum operating temperature and pressure to about 150°C and 20.4 bar respectively.

Shell & tube heat -exchanger (S&T HE)comprises a bundle of tubes through which fluid flowthat may be heated or cooled with the secondary fluid should be dispersed over the tubes which may be hot or cold fluid as per application and these tubes are supported by number of baffles, which also causes turbulence in the flow. S&THE are usually implemented for high pressure application up to 552 bar, due to its robustness, versatility and reliability.S&T HEs are employed in process industries, manufacturing plants, food, beverage & dairy units, HVAC, marine/navy, as a compressor cooling, chemicals plants, petrochemical plants, refining industries, pharmaceuticals, power stations, refrigeration units, paper and pulp plants.

Earlier studies have been highlighted on the preparation, thermophysical properties, and evaluating heat transfer performance of nano fluids. Recently studies have been focused on the evaluating the convective heat transfer of nano fluids in tubes, channels,

Copyright © 2018 Authors. This is an open access article distributed under the Creative Commons Attribution License, which permits unrestricted use, distribution, and reproduction in any medium, provided the original work is properly cited.

ducts and especially heat exchangers, thermo syphon. Pantzali et al.[1]investigated the effectiveness of nano fluids(acting as a cold fluid) in P-H-Es experimentally. They observed that at laminar condition, use of nanofluids in heat exchanger is advantageous; they disadvantage is the costlier nano fluid and the issue of stability of colloidal solution. They also found an empirical correlation. Arun et. al. [2] examined the performance of rate of heat transfer of the PHE with different types of nano fluids (CeO_2, Al_2O_3, TiO_2, and SiO_2) for varying rate of volume flow and at different concentrations and observed that CeO_2 and water nanofluid yielded the most efficient performance (highest efficiency to enhance of 16%) at low concentration (0.75 vol%) which is also the optimum concentration among the different nanofluids. Javadi et al.[3] employed SiO_2, TiO_2, and Al_2O_3based nano-fluid in a PHE. They also found that the conductivity of the nano fluid, heat transfer coefficient, and heat transfer rate of the fluid which is observed to be rises with the addition of nano particles, and overall- heat transfer- coefficient was found by Al_2O_3 nanofluid. Mare et al.[4] measured convective heat transfer coefficients of nanofluids in PHE at low temperatures and showed an enhancement in laminar flow of the heat transfer coefficient by convection is enhanced about 42% and 50% for Al_2O_3 and water and CNT and water, respectively, in comparision to those of pure water for the same Reynolds number. Farajollahi et al. [5] investigated experimentally and compared the heat transfer performance of γ-Al_2O_3/water and TiO_2/water nanofluids in an S&T HE. With the increasing Peclet number they found a significant improvement in the heat transfer characteristics of nanofluids. They observed that the thermal performance is better at low and high nano particle volume concentration of respectively TiO and water and γ-Al_2O_3 and water nanofluids. They found that at a lower nanoparticle concentration, the experimental results agrees the predicted values.

Many researchers have now investigated the performance of heat exchangers during thermal processing of milk, fruit juices beverages, and different dairy products using nano fluid or conventional heat transfer fluid.Namini et al. [6] evaluated the nutritive and physical properties of fluid like watermelon juice throughout the thermal processing by using nano fluid such as alumina nanofluid in S&T heat exchanger. The process time reduced by 24.88% and 51.63% for 2% and 4% nano-fluids respectively as compared to that of water, which saves energy, leads to improving the nutritional and physical properties of watermelon juice. Tabari et al. [7] conducted an experiment to investigate the performance of heat transfer during milk pasteurization in PHE using MWCNT-water nanofluid for both laminar and turbulent conditions. They observed that with increase in Pe number and concentration, the convective heat-transfer coefficient and Nusselt number increases with with increase in flow rate they observed improved heat transfer coefficient in higher Pe number. They found that under turbulent conditions nanofluids as hot fluids have better heat transfer performance as compared to that in laminar conditions. Kim et al. [8] modelled mathematically the heat transfer film coefficient of orange juice during pasteurization using a PHE. They employed two methods for the measurement of the density O-J (orange juice) in line using sensor and second by using a hygrometer. The ranges of heat transfer film coefficient for O-J less than that of water. They proposed a correlation to predict the O-J heat transfer film coefficient dependent on its viscosity and velocity and is independent of the geometry of the plate for different conditions of O-J pasteurization. Renato et al.[9] studied the thermo-physical properties, hydraulic properties of pineapple juice and the convective heat transfer coefficients(h) in a PHE. Correlations of specific heat and thermal conductivity of pineapple juice have been established with temperature ($17.4 \leq T \leq 85.8$ °C) and soluble solids content ($11.0 \leq Xs \leq 52.4$ºBrix).They found a negative effect of soluble solids content and a positive effects of temperature on the above properties. They employed a counter current arrangement having three flow channels, where in middle channel the cold pineapple juice flowed whilehot distilled water flowed in the two adjacent channels. They evaluated overall heat transfer coefficientfor each experimental run. The Nusselt numbers thus obtained is well correlated with the generalized power law Reynolds number ($0.13 \leq Re_g \leq 3.58$).Tadini et al [10] determine the flow characteristics of a PHE and use their parameters tode sign the pasteurization processes of liquid foods and to develop a heat transfer correlation to predict the liquid food heat transfer coefficient for different operating conditions. They have used the Visual Basic Program v. 4, for designing a plate arrangement for specific conditions of heat transfer. Experimental runs with orange juice has given results of real pasteurization temperature very close to the desired pasteurization temperature, showing errors less than 10 % between effective and projected plate heat transfer area.

Rozzi et al. [11] studied the heat transfer and frictional loss in helical improved tubes for both Newtonian and non-Newtonian fluids. The tested milk, cloudy orange juice, apricot and apple puree, in S&T HE. After experimentation results they approve that the helically corrugated tubes are more effective in improving the convective- heat transfer for different Reynolds number which ranges from 800 to the transitional flow regime limits.

2. Experimental Setup

2.1 Preparation of Nano fluid

Two-step- method is used to prepare nano fluid by adding the spherical α-Al_2O_3 nano particle with purity of 99.50% procured from Nano Labs, Jamshedpur into distilled water. The desired mass of Al_2O_3 nanoparticle is weighed using a digital balance and then it is put into the weighed distilled water gradually and the mixture is stirred mechanically using a stirrer for an hour. After this the mixture is ultrasonicated continuously for 3 hours in an ultrasonic bath (100 W and 33±3 kHz) for uniform dispersion of nanoparticle in the distilled water. It was observed that no sedimentation occurred after 5 days of the preparation of nanofluid. The pH of nanofluid is measured for 5 days using a pH meter and observed that pH value of solution is about 4.9. This pH value is far away from the iso-electric point (IEP), confirmed the nanofluid to be stable. The solution is having a pH value in the range 3-5 have better stability [12] [13] [14].

2.2 Experimental -Setup and Methodology to Conduct Experiment.

Fig. 1 & Fig. 2 depicts the experimental setup of plate-heat exchanger and shell & tube heat -exchanger respectively. They comprises two loops, a closed flow loop for hot fluid (nanofluid) and an open loop for cold fluid (mango juice). The hot flow loop comprises an insulated tank a geyser of capacity 1L and 3kW, a centrifugal pump and a valve to regulate the flow rate of hot fluid, a cold flow open loop comprises two tanks with 35L capacity, a centrifugal pump with regulating valve and a plate-heat exchanger as a test section. The temperatures and pressures of the fluids at the inlet and outlet were measured respectively, using the digital temperature indicator connected with the thermocouples and four pressure gauges fitted in the inlet and outlet connections of the heat exchanger. Flow meter is attached at the outlet of both fluids to measure the volume flow rate the fluids. The arrangement of heat exchangers were set as counter flow. After setting the inlet temperatures of nano fluid, the pump was started and the nano fluid was circulated. In the other loop mango juice is circulated from the tank to the PHE, and gains heat when passed through the heat exchangers from the nanofluid. When the system achieved steady state, the temperature of fluids and pressures were noted.

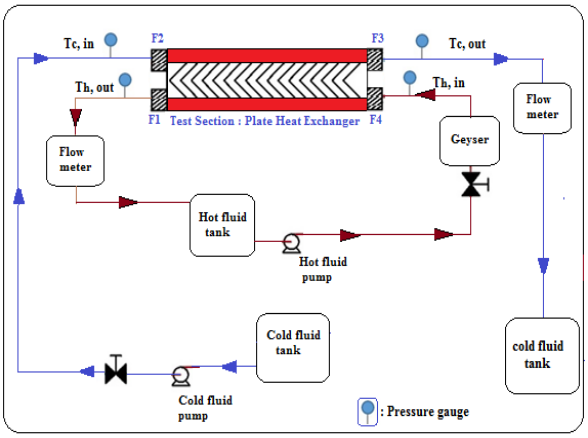

Fig.1: Schematic Diagram of experimental setup of PHE

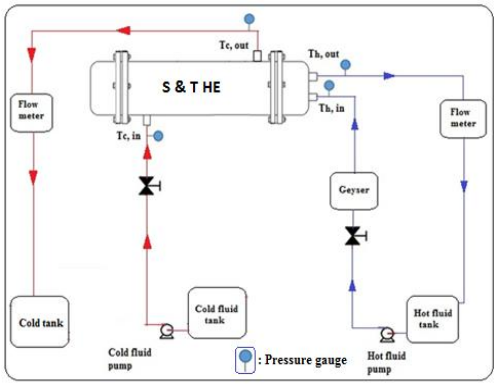

Fig.2: Schematic Diagram of experimental setup of Shell & tube heat - exchanger

3. Data Analysis

3.1. Plate-Heat Exchanger

The heat transfer rate of fluid is measured as

$$Q_h = \dot{m}_h C_{p,h}(T_{hi} - T_{ho}) \quad (1)$$

$$Q_c = \dot{m}_c C_{p,c}(T_{co} - T_{ci}) \quad (2)$$

$$Q_{avg} = \frac{Q_h + Q_c}{2} \quad (3)$$

Where,$\dot{m}_h, \dot{m}_c$ are respectively, the mass flow rate of hot and cold fluid.
The specific heat of the nano fluid [15] and fruit juice [16] is measured using eq. (4) and eq. (5) respectively

$$C_{p,nf} = \frac{(1-\phi_p)\rho_f C_{p,f} + \phi_p C_{p,p}\rho_p}{\rho_{nf}} \quad (4)$$

$$C_p = 3.81 + 3.73 \times 10^{-3} T - 1.9 \times 10^{-2} X_w \quad (5)$$

Where,
$C_{p,nf}$, $C_{p,f}$, $C_{p,p}$ are the specific heat of nano-fluid, base fluid and nano-particle respectively, ϕ_p is volume fraction of nanoparticle. ρ_{nf}, ρ_f, ρ_p are respectively, the density of nanofluid, base fluid and nanoparticle. T is temperature (°C), X_w is total soluble solid.
Overall heat transfer coefficient (U) is measured as:

$$U = \frac{Q_{avg}}{AF\Delta T_{LMTD}} \quad (6)$$

$$A = N_t HW \quad (7)$$

The heat- transfer coefficient of mango juice (cold fluid) is measured using following correlation [7]

$$Nu = 0.306 Re^{0.529} Pr^{0.33} for\ 20 < Re < 400 \quad (8)$$

$$Nu = 0.562 Re^{0.326} Pr^{0.33} for Re < 20 \quad (9)$$

The heat transfer coefficient of hot fluid is measured using following relation:

$$\frac{1}{U} = \frac{1}{h_c} + \frac{1}{h_h} + \frac{t}{k_p} \quad (10)$$

3.2. Shell & Tube Heat -Exchanger

The overall heat transfer coefficient is evaluated as

$$U = \frac{Q_{avg}}{A_p F \Delta T_{LMTD}} \quad (11)$$

Where,

$$A_p = N(\pi DL) \quad (12)$$

The heat transfer coefficient of cold fluid is measured using Bell-Delaware method.

$$h_o = h_{ideal} J_c J_l J_b J_s J_r \quad (13)$$

$$h_{ideal} = J_i C_{p,s} 0.36 \left(\frac{\dot{m}_s}{A_s}\right) \left(\frac{k_s}{C_{p,s}\mu_s}\right)^{2/3} \left(\frac{\mu_s}{\mu_{s,w}}\right)^{0.14} \quad (14)$$

Where, Ji is the Colburn j-factor for an ideal bank of tubes.
All correction factors are as follow, where,Jc is for baffle cut and spacing,$J_l$for baffle leakage effects (0.7–0.8),$J_b$for bundle bypassing effect and shell and pass dividers,J_s for variable baffle spacing at the inlet and outlet (generally 0.85 and 1.0). Jr is applicable for Re<100. IfRe>100, Jr =1.0. The overall effects of all J's are ~0.6.
The convective heat transfer coefficient of hot fluid is calculated using following relation

$$\frac{1}{U} = \frac{1}{h_i} + \frac{d_i}{2k} \ln \frac{d_o}{d_i} + \frac{d_i}{d_o} \frac{1}{h_o} \quad (15)$$

4. Results

Comparison of plate-heat exchanger and shell & tube heat - exchanger The comparison of two heat exchanger used in the thermal processing of mango juice is done on the basis of heat flux and the pressure drop observed experimentally.

4.1. Heat Flux

Fig. 3. shows the comparison of heat flux with the volume flow rate in both PHE and S&T Heat exchanger. Heat flux in both heat exchangers increases with the increase in rate of flow This is due to the fact that the flow velocity increases with increasing flow rate which increase the convective heat transfer coefficient and thus the rate of heat transfer increase in turn increases. The difference in the heat flux of PHE and S&T heat- exchanger increases with the increase in flow rate. At lower flow rate, the difference of heat flux between the two heat exchangers about 5 kW/m^2 and at higher flow rate it is 10 kW/m^2 i.e. the enhancement of heat flux in PHE is twice compared to that of S&T Heat exchanger.
The heat flux increases with the increase in concentration of nano-particle due to enhancement of thermal conductivity of nano-fluid with increase the particle concentration. The maximum increments

in the heat flux were observed as about13 kW/m^{2}and 14 kW/m^{2}respectively for S&T HE and PHE at 0.3% concentration and 65°C. The heat flux also increases with rising temperature from 50 to 65°C.and for different temperature same trend of augmentation in heat transfer has been observed.

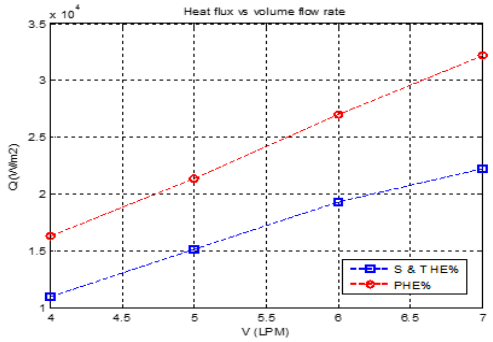

Fig.3: Variation of heat flux with volume flow rate at 65°C and 0.3% nano particle concentration

4.2. Pressure Drop

The pumping power is directly related to the pressure drop. The pressure drop increases with the flow rate as the pressure drop is related to the square of discharge. Fig. 4, depicts that the pressure drop in the shell & tube heat -exchanger was very large around 36 times at low and 40 times at high flow rates compared to that of plate-heat exchanger. This is due to the fact that the pressure drop depends on the effective length which is very less in the PHE compared to the S&T HE.

With increase in the concentration the pressure drop also increases because the addition of nanoparticles the viscosities of the nanofluid get increased which in turn increases the pressure drop.

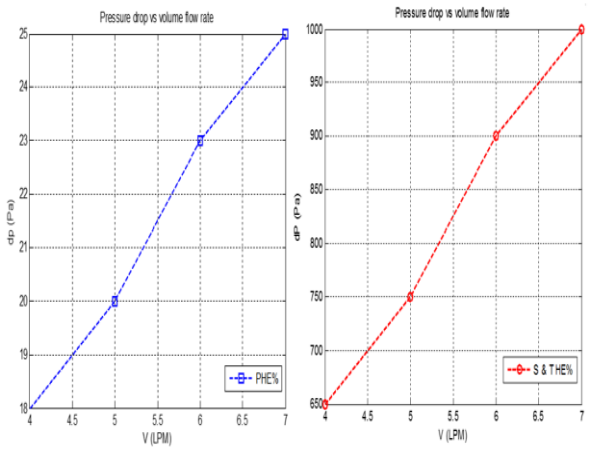

Fig. 4.30: Variation of pressure drop vs volume flow rate at 0.3% and 65°C for PHE and S&T HE

4.3. Nusselt Number

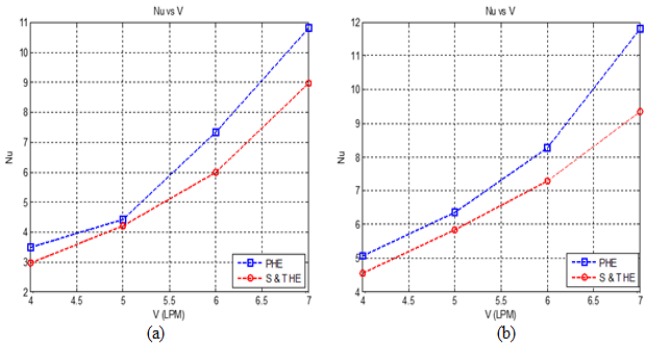

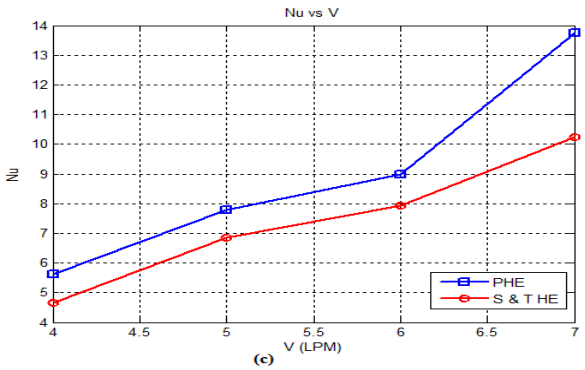

Fig. 6: Nusselt number vs volume flow rate at 55°C for (a) 0.1% (b) 0.2% and (c) 0.3% nanoparticle concentration

Fig. 6 depicts the variation of Nusselt number with volume flow rate at 55°C for different concentration of nanoparticle. It was observed that the heat transfer performance increases with increase in volume flow rate and concentration of nanoparticle. This can be illustrated as at a given temperature and hydraulic diameter the Reynolds number is a function of flow velocity, which increases with the flow rate. At a given temperature Prandtl number is constant and Nusselt number is dependent on the Reynolds number thus Nusselt number increases with flow rate.

The increase in nanoparticle enhances the thermal conductivity which increases the heat transfer performance. At lower volume flow rate and low concentration the difference of heat transfer between the two heat exchangers was almost constant with increasing volume flow rate, while for 0.1% concentration it was not appreciable at 5LPM. At higher volume flow rate there was significant enhancement of heat transfer for both the heat exchangers.

The enhancement in the heat transfer performance was observed at higher volume flow rate i.e. for PHE was 21%, 28% and 39% respectively at 0.1, 0.2% and 0.3% concentration as compared to the S&T HE.

The difference in the Nusselt number between the two heat exchangers was observed for 0.3% concentration at 55°C i.e. about 3.5. While, the maximum increment in the Nusselt number was observed for same concentration at 65°C for PHE and S&T HE were respectively about 8 and 5.5. The heat transfer also enhances with rising temperature from 50 to 65°C.and for different temperature same trend of enhancement in heat transfer is observed.

5. Conclusions

In the present experiment a comparative study between the thermal and fluid energy transfer performance of plate-heat exchanger and shell & tube heat -exchanger using Al_2O_3/DW nanofluid during thermal processing of mango juice was done. The experiment was conducted for a different particle concentration, with varying volume flow rate and inlet-temperature of the hot fluid keeping a constant inlet- temperature of cold fluid.

The conclusions drawn from the study can be précised as follows

- The heat flux of the both the heat exchanger increases with the increasing flow rate as the flow velocity increases with increasing flow rate which increase the convective heat transfer- coefficient and thus the rate of heat transfer increases.
- The heat flux also increases with the increase in the concentration as it increases the conductivity of the nanofluid and in turn rate of heat- transfer increases.
- It was observed that the PHE have high heat flux increment which was twice that of S&T Heat exchanger
- At higher flow rates the pressure drop in shell & tube heat -exchanger was observed as very large compared to that of plate-heat exchanger around 36 times at low and 40 times at higher flow rates for 0.3% concentration at 65°C.
- With increase in the concentration the pressure drop also increase because the addition of nano particles the viscosity

of the nano fluid get increased which in turn increases the pressure drop. At 0.1, 0.2 and 0.3% the maximum pressure drop observed in the PHE was 20, 24 and 27 Pa and in the S&T HE it was respectively, 660, 750 and 810.

- Heat transfer performance improves with the increasing flow rate which can be illustrated as the Reynold number depends on the flow velocity and the flow velocity increases with the increasing flow rate thus the Reynolds number increases in turn increases the Nusselt number which is the function of Reynolds number and Prandtl number. Here at constant temperature the Prandtl number is constant.
- The enhancement in the heat transfer performance was observed at higher volume flow rate at 55°Ci.e. for PHE in compared to the S&T HE were 21%, 28% and 39% respectively at 0.1, 0.2% and 0.3% concentration.

References

[1] Pantzali M. N., Kanaris A. G., Antoniadis K. D., Mouza A. A., Paras S. V., Investigating the efficacy of nanofluids as coolants in plate-heat exchangers (PHE), Chemical Engineering Science, 64 (14) (2009) 3290-3300.

[2] Tiwari A. K., Ghosh P., Sarkar J., Performance comparison of the plate-heat exchanger using different nanofluids, Experimental Thermal and Fluid Science 49 (2013) 141–151.

[3] Javadi F.S., Sadeghipour Saidur S., BoroumandJazi R., Rahmati G., B., Elias M.M., Sohel M.R., International Communications in Heat and Mass Transfer, 44 (2013) 58–63.

[4] Halelfadl T. Mare S., Sow O., Estelle P., S. Duret, F. Bazantay, Comparison of the thermal performances of two nanofluids at low temperature in a plate-heat exchanger Experimental Thermal and Fluid Science 35 (8) (2011) 1535–1543.

[5] B. Farajollahi, S. Gh. Etemad, M. Hojjat, Heat transfer of nanofluids in a shell & tube heat -exchanger , International Journal of Heat and Mass Transfer, 53 (2011) 12–17.

[6] S. F. S. Namini, S. M. Jafari, A. M. Ziaifar, A .M. Rashidi, Evaluation of Nutritional and Physical Properties of Watermelon Juice during the Thermal Processing by Using Alumina Nano-fluid in a Shell & tube heat -exchanger , Nutrition and Food Sciences Research, 2 (4) (2015) 47-54.

[7] Z. T. Tabari, and S. Z. Heris, Heat transfer performance of milk pasteurization plate heat exchanger using MWCNT/Water nanofluid, 36 (2015) 196-204.

[8] H. B. Kim, C. C. Tadini, R. K. Singh, Heat transfer in a plate-heat exchanger during pasteurization of orange juice, Journal of Food Engineering, 42 (1999) 79-84.

[9] R. A. F. Cabral, J. A. W. Gut, V. R. N. Telis, J. T-Romero, Non-newtonian flow and pressure drop of pineapple juice in a plate-heat exchanger, Braz. J. Chem. Eng. 27 (4) (2010)

[10] C. C. Tadini, G. G. Badolato, B. M. N. L. Vieira, A. C. Marques, Study of the Heat Transfer of Liquid Foods using a Plate Exchanger, (2000).

[11] S. Rozzi, R. Massini, G. Paciello, G. Pagliarini, S. Rainieri, A. Trifiro, Heat treatment of fluid foods in a shell & tube heat - exchanger : Comparison between smooth and helically corrugated wall tubes, Journal of Food Engineering 79 (2007) 249–254.

[12] Z. Haddad, C. Abid, H.F. Oztop, A. Mataoui, A review on how the researchers prepare their nanofluids, Int. J. Therm. Sci. 76 (2014) 168-189.

[13] M.-S. Liu, M.C.-C. Lin, C.Y. Tsai, C.-C. Wang, Enhancement of thermal conductivity with Cu for nanofluids using chemical reduction method, Int. J. Heat Mass Transfer 49 (17–18) (2006) 3028–3033.

[14] J. Fan and L. Wang, Review of heat conduction in nanofluids, J. Heat Transf., 133 (2011) 040801.

[15] K. khanafer, K. Vafai, A critical synthesis of thermophysical characteristics of nanofluids. Int. J. Heat Mass Transfer 54 (2011) 4410-4428.

[16] Gundurao, Thermo-physical, and rheological properties of mango puree as influenced by soluble solids, temperature and high pressure treatment. Thesis Mc GiII University, (2005).