International Journal of Engineering & Technology, 7 (4.39) (2018) 222-226

International Journal of Engineering & Technology

Website: www.sciencepubco.com/index.php/IJET

Research paper

Design of a Microstrip Antenna Structure for WBAN Devices at 2.45 GHz (ISM) Band

Vipin Gupta[1], Anupma[2], Mihir Narayan Mohanty[3]*

[1]Sri Sai College of Engineering and Technology of Institution, Badhani, Pathankot, India.
[2]Thapar Institute of Engineering and technology, Patiala, India.
[3]School of Electronics, ITER
SOA Deemed To Be University
Bhubaneswar-751030 (India)
**Corresponding author E-mail: Mihir.n.mohanty@gmail.com*

Abstract

In this paper, a microstrip antenna is presented for wearable devices operating at unlicensed Industrial, Scientific and Medical (ISM) band. Antenna is designed on 34 × 28 mm^2 sheet of low loss Rogers 5880 material. An equivalent biological tissue model is designed for the simulation. A wide bandwidth of 400 MHz can easily withstand the detuning effect caused by body posture and movement. Effect of electromagnetic radiation on human tissue is also analyzed for safety. High gain, low SAR makes antenna a good candidate for wearable devices.

Keywords: *ISM band, tissue model, SAR, wearable devices*

1. Introduction

Wireless Body Area Network (WBAN) is an exciting field of research emerging IEEE 802.15.6 standard for medical applications [1]. Proactive health monitoring devices has enabled early detection and prevention of diseases. WBAN includes real time monitoring of vital signals such as ECG, temperature, heart rate, glucose and oxygen level from the body and transmitting to the medical personnel. Specific sensors are implanted in or placed on body for measuring the signal. RF communication link is established between sensor module and external receiver at a distance from body [2]. Integrated antenna is a key and essential component which enables communication in the lossy biological medium. Due to high flexibility in designing, size and shape; patch antennas are receiving significant research interest for integrating into the implantable and RF enabled biotelemetry. The design of on-body patch antennas has to deal with some challenges related to biocompatibility, miniaturization, patient safety in terms of SAR, improved quality of communication with exterior monitoring/control equipment, and reliable to avoid detuning effect [3].ITU-R Recommendation outlined the use of 402 – 405 MHZ band for Medical Implant Communication Systems (MICS). 433.1- 434.8 MHZ, 868-868.6 MHZ, 902.8- 928 MHZ, and 2.4-2.5 GHZ (ISM) and UWB (3.1 to 10.6 GHZ) are also used for wireless body area network communication [4].
Several configurations have been studied for wearable antennas. A conformal wearable PIFA antenna has been designed in [5] showing omnidirectional radiation pattern. A large amount of power is radiated towards the body. Stacked patch antenna with full ground plane is designed for WBAN. Full ground plane is a way to direct the radiations away from the human body [6]. Several textile based wearable antenna has been proposed [7-9] for off body communication, however, their performance degrade due to crumpling.EBG integrated structures have been presented in [10-11] for robust performance under bending. They have larger lateral area and height. A defected ground staircase patch antenna has been proposed for multiband body area network devices [12]. A recent investigation on a dual fed, dual mode structure at ISM band has been presented in [13].
In this research work of ours, an antenna structure for on body devices has been designed at 2.45 GHz ISM band. Antenna performance is analyzed in free space and on human body. Results are discussed in further sections.

2. Antenna Design

Antenna is simulated on a thin flexible substrate Rogers 5880 (ε_r = 2.2, loss tan = 0.003) with a thickness of 0.6 mm. Figure 1 represents the geometry of proposed structure. Partial ground plane is designed to enhance the bandwidth. Hexagonal shaped ring is printed as a radiating patch to obtain the desired resonance frequency. The circular microstrip patch antenna is basic configuration. The resonance frequency of circular patch antenna is calculated by the following formula:

$$f_0 = \frac{k_{nm} c}{2\pi a_e \sqrt{\varepsilon_e}} \quad (1)$$

Where k_{nm} is the derivative of the mth of the Bessel function of order n [14].
For the fundamental TM11 mode, the value of k_{nm} is 1.84118. End to end fringing fields of the circumference of the circular

Copyright © 2016 Authors. This is an open access article distributed under the Creative Commons Attribution License, which permits unrestricted use, distribution, and reproduction in any medium, provided the original work is properly cited.

microstrip antenna are taken into description by replacing the patch radius 'a' by the effective radius ' a_e ',

$$a_e = a\left[1+\frac{2h}{\pi a\varepsilon_r}\left\{\ln\left(\frac{a}{2b}\right)+1.41\varepsilon_r+1.77+\frac{h}{a}(0.268\varepsilon_r+1.65)\right\}\right]^{1/2} \quad (2)$$

The effective dielectric constant ε_e of substrate is calculated by

$$\varepsilon_e = C(a,h,\varepsilon_0\varepsilon_r)/C(a,h,\varepsilon_0) \quad (3)$$

Where $C(a,h,\varepsilon_0\varepsilon_r)$ and $C(a,h,\varepsilon_0)$ are the total capacitances of the dominant TM11 mode of circular microstrip antenna with and without a dielectric substrate, respectively. These can be calculated as

$$C(a,h,\varepsilon_0\varepsilon_r) = \frac{0.8525\varepsilon_0\varepsilon_r\pi a^2}{h}+0.5C_f \quad (4)$$

where,

$$C_f = 2a\varepsilon_0\left[\ln\left(\frac{a}{2h}\right)+1.41\varepsilon_r+1.77+\frac{h}{a}(0.268\varepsilon_r+1.65)\right] \quad (5)$$

Antenna length is chosen as (λ/4) for 2.45 GHz frequency. A 50 ohm impedance feed line with width 1.6 mm is used. Radius R1 controls the resonance bandwidth of antenna. Further small hexagonal slot of radius 1 mm are inserted in design to improve the impedance matching. Dimensions of antenna are given in Table 1. Antenna performance is analyzed in free space and biological environment. Figure 2 shows the simulated return loss plot.
Only a small shift is observed when antenna placed on equivalent tissue model. The proposed design has wide bandwidth of 400 MHz that is good enough to withstand detuning effect caused by body posture and movement.

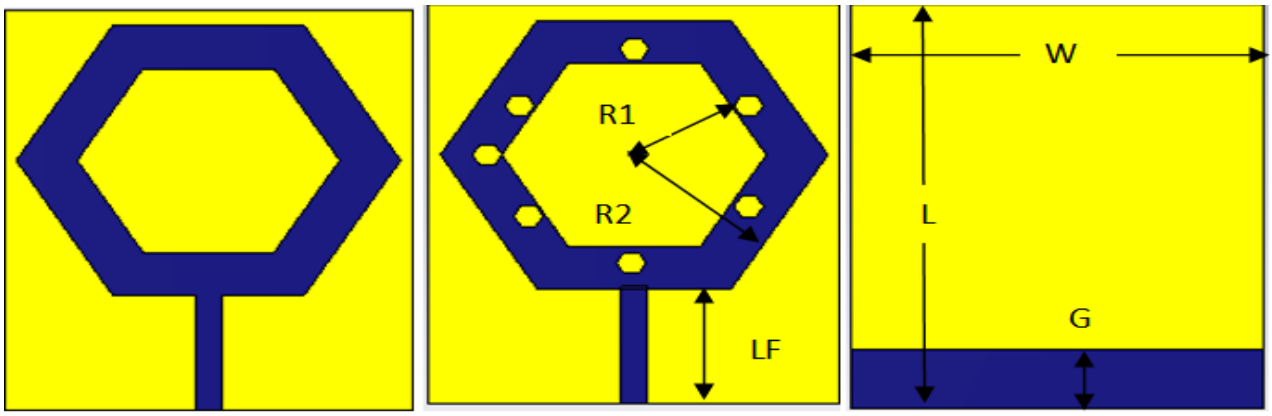

(a) (b) (c)

Fig. 1: Geometry of the proposed antenna structure (a) Front view without slot (b) Front view with slot (c) Back view

Table 1: Dimensions of antenna

Parameter	Size(mm)	Parameter	Size(mm)
L	**34**	**LF**	**8**
W	**28**	**G**	**4**
R1	**13.2**	**R2**	**9**

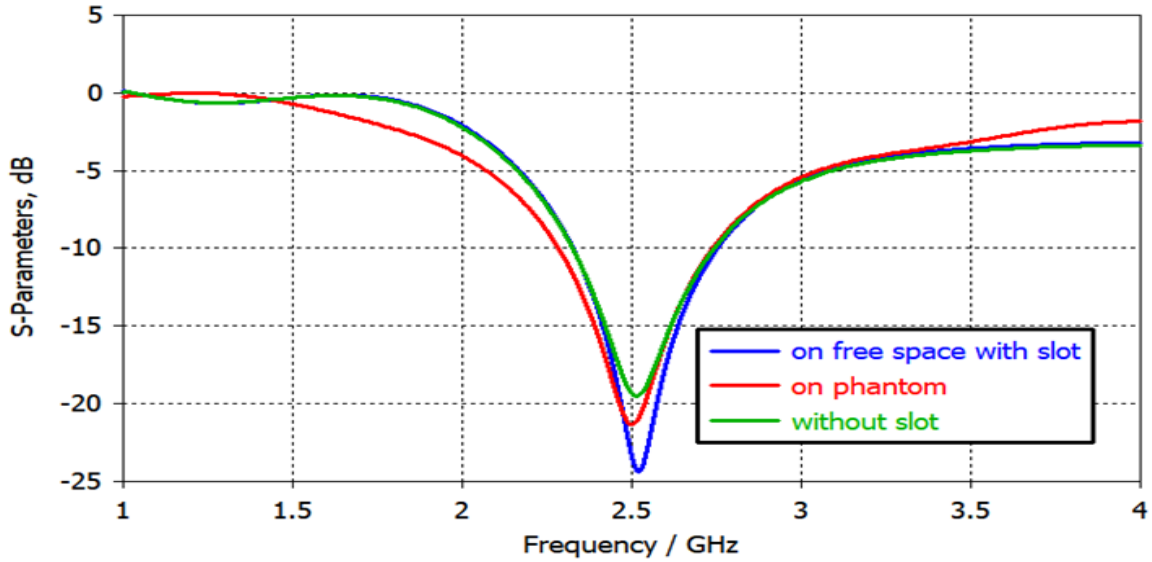

Fig.2: Simulated return loss of proposed antenna

3. Equivalent Tissue Model

Human body is a complex multilayered structure that affects the performance of antenna operating near the body and, in turn electromagnetic waves also have diverse effect on the tissue. For on body simulation environment a equivalent tissue phantom model is designed in CST Microwave Studio. Electrical properties of different tissue layer at 2.5 GHz are summarized in Table 2. Tissue layer with maximum water absorption has highest permittivity. A three layered tissue model 80×80 mm^2 is designed. Thickness of skin /fat/ muscle layer is taken 2/5/12 mm respectively [15]. Figure 3 shows the simulation environment of antenna and phantom model structure.

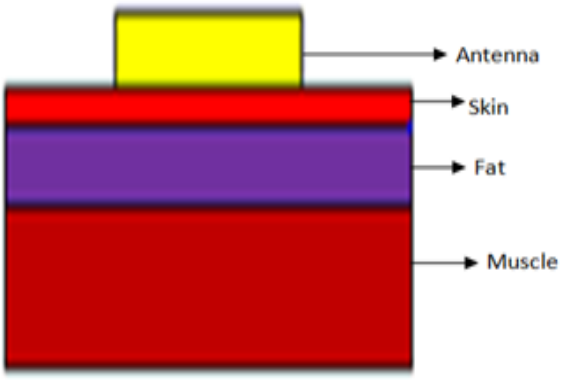

(a)

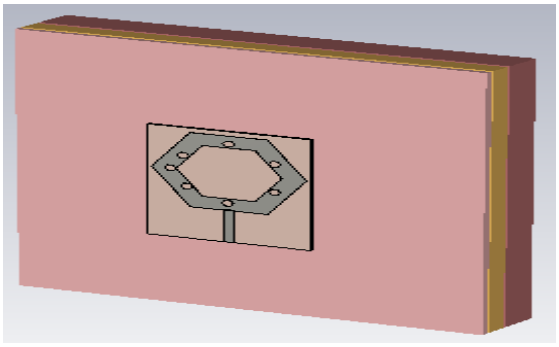

(b)

Fig. 3: (a) Phantom model (b) Prospective view of simulation model

Table2: Electrical properties of the designed phantom model

Tissue	Electrical Permittivity	Conductivity (S/m)	Loss Tangent
Skin	**38.8**	**1.18**	**.30**
Fat	**5.30**	**0.07**	**.14**
Muscle	**53.5**	**1.34**	**.25**

4. Results and Discussion

As shown in Figure 4 antenna has high efficiency (90%) in free space. A significant fall in efficiency is due to the absorption of electromagnetic radiations by human body. For 2.5 GHz, the half wavelength (ʎ/2) is 60 mm. It can be clearly observed from surface current distribution that total current length for half wave resonance is close to 60 mm shown in Fig. 5.

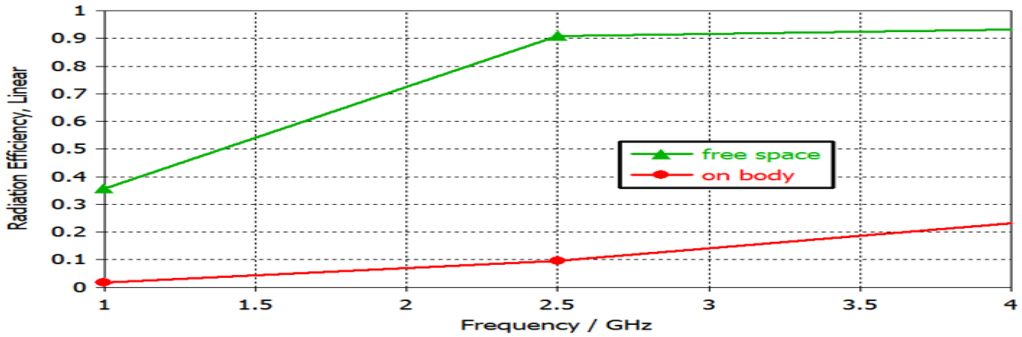

Fig. 4: Radiation efficiency of proposed antenna on free space and phantom model

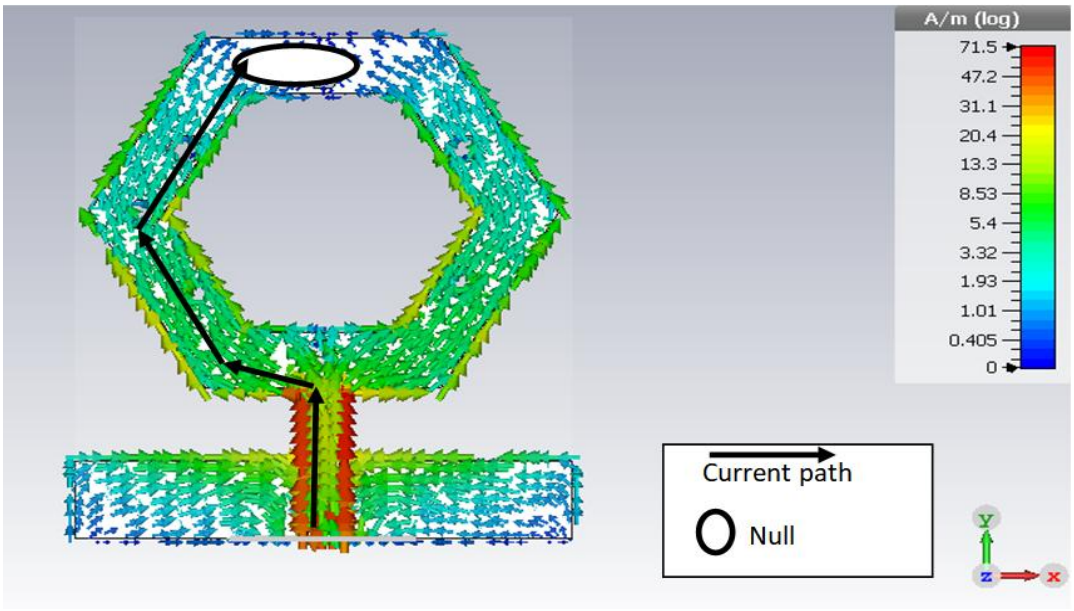

Fig. 5: Surface current distribution at 2.45 GHz

Table 3: performance of proposed antenna structure

	Gain(dBi)	Efficiency(%)	Bandwidth(MHz)
	4.1	**10%**	**400**
Free space	**2**	**90%**	**400**

E-plane radiation pattern of antenna in free apace and on phantom model are shown in figures 6 and 7 respectively. Antenna shows near omni directional radiation pattern in free space and monopole like radiation pattern on human body. Human body acts as both an absorber and reflector for electromagnetic radiations. Maximum radiation is towards the +Z direction. This type of radiation characteristics are required for the BAN devices [15]. Directive gain of antenna is enhanced from 2.09 dBi to 3.95 dBi on body. Table 3 summarizes the performance of antenna both in air and on tissue model.

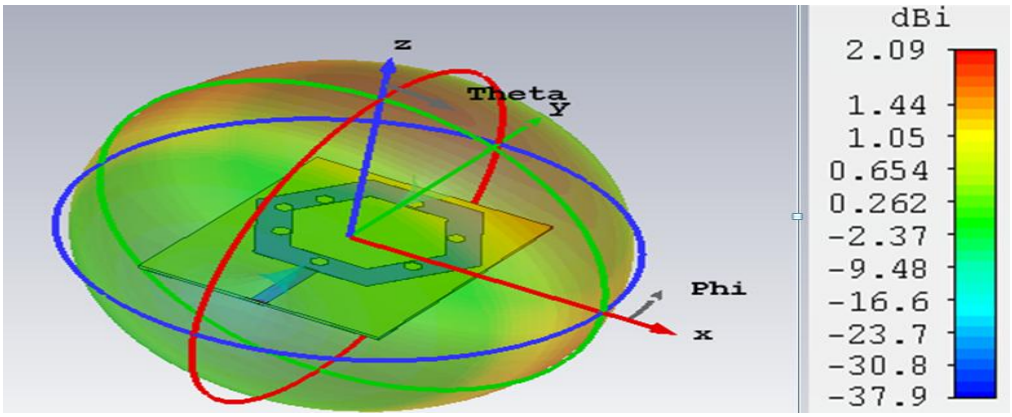

Fig. 6: E-planeRadiation pattern on free space

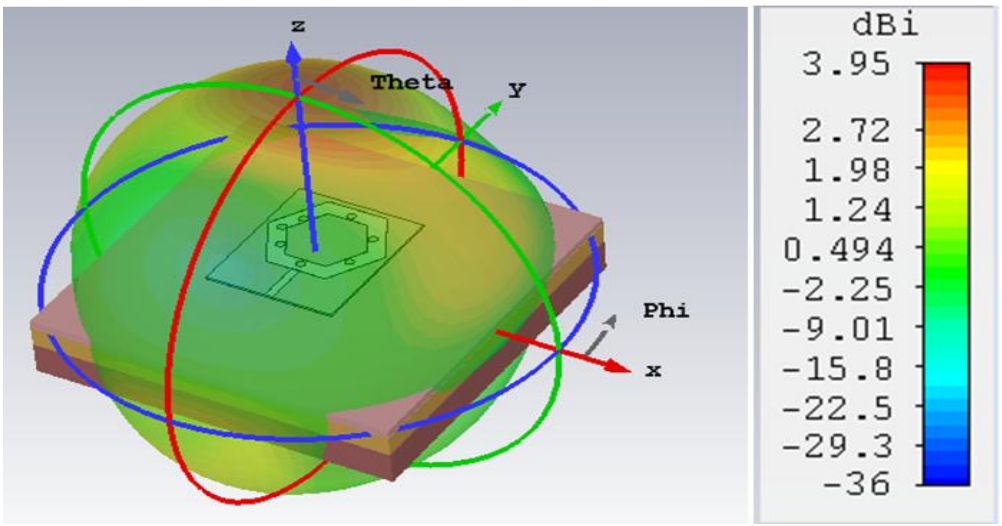

Fig. 7: E-planeRadiation pattern on phantom model

5. Specific Absorption Rate (SAR) Analysis

SAR is a standard measure to evaluate this absorbed electromagnetic power in human tissue. According to the IEEE C95.1-2005standard, SAR value should not be larger than 2 W/Kg averaged over 10 g of tissue in the shape of a cube [11]. SAR value related to the applied input power can be defined by

$$SAR = \sigma| E^2 | /2 \rho \quad (6)$$

Where, σ represents tissue conductivity (s/m); E represents the electric field (V/m) and **ρ** is for tissue mass density (Kg/m^3). Simulated SAR of the antenna is shown in figure 6. Maximum SAR is 1.08 W/Kg measured for 0.1 W of input power. This low value satisfies the maximum safety limit.

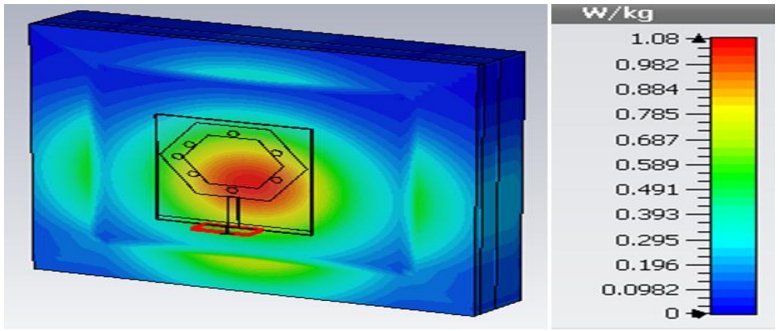

Fig.8: Simulated SAR value of proposed antenna

6. Conclusion

The proposed design has good impedance bandwidth of 400 MHz centered on the resonance frequency of 2.5 GHz. Antenna shows good radiation characteristics oriented away from the direction of body. Efficiency is reduced from 90 to 10% when operated in close proximity of human body. High gain enables to establish a reliable communication link with external monitoring device. Low SAR value ensures the user safety and make antenna good choice for WBAN devices.

References

[1] S. Movassaghi, M. Abolhasan, J. Lipman, D. Smith, A. Jamalipour, "Wireless body area networks: A survey", *IEEE Com. Sur. & Tut.* Vol. 16, No.3 pp. 1658-1686, 2014.

[2] M. Chen, S. Gonzalez, A. Vasilakos, H. Cao, C. M. Leung, "Body area Networks: A survey", *Mobile Net. App*., Vol. 16, No.2, pp.171-193, 2011.

[3] P.S.Hall, Y. Hao, "Antennas and Propagation for On-body Communication Systems", .*IEEE Antennas Propag. Mag.*, Vol. 49, pp. 41–58, 2007.

[4] A. Gupta, A. Kansal, P. Chawla, "A Review of Antennas for Wireless Body Area Network Devices", *IEEE conference on computing for sustainable global development*, India, 2018.

[5] W. El. Hajj, C. Person, J. Wiart, "A Novel Investigation of a Broadband Integrated Inverted-F Antenna Design; Application for Wearable Antenna", *IEEE Trans. Antennas Propag.*, Vol. 62, No.7,pp. 3843–3846, 2014.

[6] L. Poffelie, A.Yimdjo, "A High-Fidelity All-Textile UWB Antenna With Low Back Radiation for Off-Body WBAN Applications", *IEEE Trans. Antennas Prop.* , Vol. 64, No.2, pp.757-760, 2016.

[7] S. Yan, P.J. Soh, G.-A. E. Vandenbosch, "Dual-band Textile MIMO Antenna Based on Substrate-Integrated Waveguide (SIW) Technology", *IEEE Trans. Antennas Propag*., Vol. 63, No.11,pp. 4640–4647, 2015.

[8] C. Hertleer, A. Tronquo, H. Rogier, L. Van, "An Aperture Coupled Patch Antenna for Integration into Wearable Textile Systems", *IEEE Antennas Wireless Propag. Lett.*, Vol. 6, pp. 392–395, 2007.

[9] S. Yan, P. J. Soh, G.-A. E. Vandenbosch, "Low-profile DualbandTextile Antenna with Artificial Magnetic Conductor Plane", *IEEE Trans.Antennas Propag*., Vol. 62, No.12, pp. 6487–6490, 2014.

[10] S. Zhu, R. Langley, "Dual-band Wearable Textile Antenna on an EBG Substrate", .*IEEE Trans. Antennas Propag.*, Vol. 57, No. 4, pp. 926–935, 2009.

[11] M.-A.Abbasi, S. Nikolaou, M.-A. Antoniadu, N.S. Stevanovic, P. Vryonides, " Compact EBG-Backed planar Monopole for BAN Wearable Applications", .*IEEE Transac. Antennas Prop.*, Vol. 65, No. 2, pp. 453- 463, 2017.

[12] K. Varshini, T. R. Rao, "Investigations on SAR and Thermal Effects of a Body Wearable Microstrip Antenna", *Wireless Pers. Comm*., pp. 1-17, 2007.

[13] C. Mendes, C. Peixeiro, "A Dual-mode Single Band Wearable Microstrip Antenna for Body Area Networks", *IEEE Antennas Wireless Propag. Lett.* Vol. 16, pp. 3055-3058, 2017.

[14] R. Devi, D. Neog, "Determination of radius of Circular Microstrip Antenna using Clonal Selection Algorithm", *IOSR J. ELe. Comm. Eng.* , Vol. 10, pp. 52-55, 2015.

[15] M. N. Shakib, M. Moghavvemi,W. Mahadi, "Design of a Tri-Band Off-Body Antenna for WBAN Communication", *IEEE Antennas Wireless Propa. Lett.*, Vol. 16 pp. 210-213, 2017.

[16] T. Jinpil, S. Lee, J. Choi, "All-Textile Higher Order Mode Circular Patch Antenna for On-Body to On-Body Communications", *IET Microwaves, Antennas & Propagation*., Vol. 9, No.6, pp. 576-584, 2014.