*International Journal of Engineering & Technology*, 7 (4.27) (2018) 87-91

International Journal of Engineering & Technology

*Website: www.sciencepubco.com/index.php/IJET*

***Research paper***



# An Improved Adaptive Extended Kalman Filter Algorithm of SINS/GPS Loosely-Coupled Integrated Navigation System

**Yuyan Wang[1*], Xiuyun Meng[2], Jilu Liu[3]**

*[1 2]Beijing Institute of Technology*
*[3] Beijing Hangxing Machinery Manufacturing*
**Corresponding author E-mail: m13701249934@163.com*

**Abstract**

The Kalman Filter algorithm usually cannot estimate noise statistics in real-time, in order to deal with this issue, a new kind of improved Adaptive Extended Kalman Filter algorithm is proposed. Based on residual sequence, this algorithm mainly improves the adaptive estimator of the filter algorithm, which can estimate measurement noise in real-time. Furthermore, this new filter algorithm is applied to a SINS/GPS loosely-coupled integrated navigation system, which can automatically adjust the covariance matrix of measurement noise as noise varies in the system. Finally, the original Extended Kalman Filter and the improved Adaptive Extended Kalman Filter are applied respectively to simulate for the SINS/GPS loosely-coupled model. Tests demonstrate that, the improved Adaptive Extended Kalman Filter reduces both position error and velocity error compared with the original Extended Kalman Filter.

***Keywords***: *Strap-down inertial navigation system, Loosely-coupled integrated navigation, Extended Kalman filter, Adaptive extended Kalman filter*.

## 1. Introduction

Strap-down inertial navigation system (SINS) does not need external input. By its own inertial sensors, it can get the navigation information of the carrier [1].
It is a frameless system consisting of three line accelerometers, three gyroscopes, and a microcomputer. The gyroscopes and accelerometers are fixed to the carrier directly. Gyroscopes and accelerometers are used to measure angular motion information and linear motion information of the carrier respectively. The carrier computer calculates the direction, attitude, velocity and position of carrier according to measurement information measured by gyroscopes and accelerometers. The strap-down inertial navigation system has advantage of simple structure, small volume, light weight, low cost, simple maintenance, high reliability. In addition, due to the appearance of solid-state inertial sensors such as laser gyro and fiber optic gyro, the rapid development of computer technology and the improvement of computational theory, the strap-down inertial navigation is applied widely.
The disadvantage of SINS is gyro and accelerometer's error accumulate as time goes by. Thus, SINS is not suitable for long time navigation alone.
Global Positioning System (GPS) is real-time positioning and navigation around the world [2]. GPS was developed by the America department of defense to establish a satellite navigation system with all weather, all time, high accuracy. GPS can provide global customers with low cost and high precision three-dimensional navigation information. Also, it greatly improved the information level of society, vigorously promoted the development of digital economy. However, the main drawback of GPS is the satellite signals can be jammed. At the signal shelter, positioning precision will descend, which results in low reliability.
In order to improve the navigation precision, SINS is integrated with GPS. Compared to individual systems, the integrated navigation system provides more accurate estimation of position and velocity [3]. Usually, an integrated navigation system has three integration techniques: loosely-coupled technique, tightly-coupled technique, and ultra tightly-coupled technique. Therefore, the loosely-coupled model is simple and easy to simulate, it has been applied widely.
The Kalman Filter [4] is used in SINS/GPS loosely- coupled navigation system to fuse the SINS data and GPS data. However, neither Extended Kalman Filter (EKF) nor Unscented Kalman Filter (UKF) can estimate the noise characteristics of system, which results in the increase of filter error. Nevertheless, the Adaptive Kalman Filter can adjust the process noise covariance matrix and (or) measurement noise covariance matrix in real-time. Thus, it can solve the problem of estimation error increasing and filter divergence in practice [5-7].
In this paper, the loosely-coupled modeling on GPS/INS integrated navigation system is designed and simulated. The remainder of this paper is organized as follows. Section 2 describes the loosely-coupled SINS/GPS navigation system model. Section 3 describes the improved Adaptive Extended Kalman Filter algorithm. Section 4 shows the simulation results of EKF and improved Adaptive Extended Kalman Filter. Section 5 draws conclusions regarding the loosely- coupled SINS/GPS.

## 2. Loosely-Coupled SINS/GPS Model

The loosely-coupled SINS/GPS model is as follows:

**Copyright © 2018 Authors. This is an open access article distributed under the Creative Commons Attribution License, which permits unrestricted use, distribution, and reproduction in any medium, provided the original work is properly cited.**

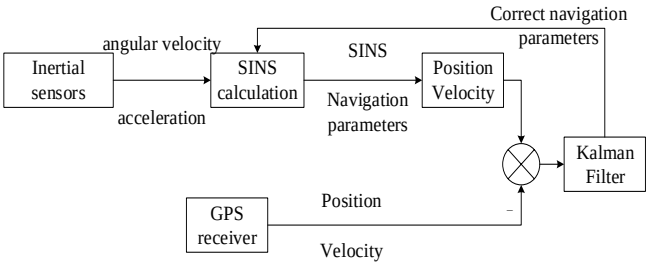


**Fig 1:** The model of loosely-coupled SINS/GPS navigation system

From the Fig.1, it is obvious that SINS system takes output of inertial sensors as its input, and calculates the positon as well as velocity of SINS. Then, the difference between SINS's navigation information and GPS's navigation information is the input of Kalman Filter. Lastly, the Kalman Filter's output corrects the navigation parameters of SINS.

The loosely-coupled SINS/GPS navigation system's error state vector is 15-dimensional [8].

$$X_I = \left[\phi_E \ \phi_N \ \phi_U \ \delta V_E \ \delta V_N \ \delta V_U \ \delta L \ \delta\lambda \ \delta h \ \varepsilon_{bx} \ \varepsilon_{by} \ \varepsilon_{bz} \ \nabla_{bx} \ \nabla_{by} \ \nabla_{bz}\right]^T \quad (1)$$

Where, $\phi_E \ \phi_N \ \phi_U$ are misalignment attitude errors; $\delta V_E \ \delta V_N \ \delta V_U$ are velocity errors; $\delta L \ \delta\lambda \ \delta h$ are latitude error, longitude error and height error respectively; $\varepsilon_{bx} \ \varepsilon_{by} \ \varepsilon_{bz}$ are gyro drifts; $\nabla_{bx} \ \nabla_{by} \ \nabla_{bz}$ are accelerometer errors. The geographic coordinate system is East-North-Up (EUN).

The system's state equation and measurement equation [9-10] are as follows:

$$\dot{X}_I(t) = F_I(t)X_I(t) + G_I(t)W_I(t) \quad (2)$$

Where, $F_I(t)$ is the system's state transition matrix, $W_I(t)$ is the process noise, and $G_I(t)$ is the noise driven matrix.

The measured vector consists of position error and velocity error, as shown in (3).

$$Z = H_I X_I + V \quad (3)$$

$V$ is the measurement noise. $H_I$ is the measured model making up of the partial derivative of every state estimation value, which must be updated successively by recursion method.

# 3. Improved Adaptive Extended Kalman Filter

Filtering is the main part of integrated navigation. The good filter can reduce filtering error and improve precision of navigation. Especially, when the noise of system is unknown or cannot be estimated accurately, the traditional Kalman Filter is not suitable.

In the twentieth century, Sage and Husa brought up the Adaptive Kalman Filter theory. Its noise estimator is a kind of suboptimal unbiased estimation, and can constantly estimate or correct the unknown or time-varying system model parameters as well as noise statistical characteristics. Thus, the Adaptive Kalman Filter can have a better performance under the circumstances of unknown noise statistics and unknown system model parameters.

The Sage-Husa Adaptive Kalman Filter algorithm [11-13] is as below:

$$\hat{X}_{k/k-1} = \phi_{k,k-1}\hat{X}_{k-1} + \Gamma_{k-1}q_{k-1} \quad (4)$$

$$e_k = Z_k - H_k\hat{X}_{k/k-1} - r_k \quad (5)$$

$$\hat{X}_k = \hat{X}_{k/k-1} + K_k e_k \quad (6)$$

$$P_{k/k-1} = \phi_{k,k-1}P_{k-1}\phi_{k,k-1}^T + \Gamma_{k-1}Q_{k-1}\Gamma_{k-1}^T \quad (7)$$

$$K_k = P_{k/k-1}H_k^T(H_kP_{k/k-1}H_k^T + R_k)^{-1} \quad (8)$$

$$P_k = (I - K_kH_k)P_{k/k-1} \quad (9)$$

$$q_k = (1-d_{k-1})q_{k-1} + d_{k-1}G_k\left(\hat{X}_k - \phi_{k,k-1}\hat{X}_{k-1}\right) \quad (10)$$

$$Q_k = (1-d_{k-1})Q_{k-1} + d_{k-1}G_k\left(K_ke_ke_k^TK_k^T + P_k - \phi_{k-1}P_{k-1}\phi_{k,k-1}^T\right)G_k^T \quad (11)$$

$$r_k = (1-d_{k-1})r_{k-1} + d_{k-1}(Z_k - H_k\hat{X}_{k/k-1}) \quad (12)$$

$$R_k = (1-d_{k-1})R_{k-1} + d_{k-1}\left(e_ke_k^T - H_kP_{k/k-1}H_k^T\right) \quad (13)$$

$$G_k = \left(\Gamma_k^T\Gamma_k\right)^{-1}\Gamma_k^T \quad (14)$$

$$d_{k-1} = \frac{1-b}{1-b^k}, 0 < b < 1 \quad (15)$$

Where, $\phi_{k,k-1}$ is the discrete state transition matrix, $\Gamma_{k,k-1}$ is the noise driven matrix, $e_k$ is the residual, $K_k$ is the gain matrix of Kalman Filter, $P_k$ is the error covariance matrix, $r_k$ is the average value of measurement noise, $R_k$ is the measurement noise covariance matrix, $Q_k$ is the process noise covariance matrix, $q_k$ is the process noise average value, $b$ is called the forgetting factor.

Usually, the Sage-Husa adaptive algorithm cannot estimate both measurement noise covariance and process noise covariance matrix at the same time, because it will accumulate errors and result in filter divergence.

## 3.1. An Improved Adaptive Extended Kalman Filter

Based on the Sage-Husa Adaptive Kalman Filter, an improved Adaptive Extended Kalman Filter is proposed to estimate the measurement noise of loosely-coupled SINS/GPS system.

### 3.1.1 An Improved Adaptive Extended Kalman Filter Algorithm

The improved Adaptive Extended Kalman Filter (AEKF) algorithm is shown as follows:

The Filtering calculation loop:

$$\hat{X}_{k/k-1} = \phi_{k,k-1}\hat{X}_{k-1} \quad (16)$$

$$e_k = Z_k - H_k\hat{X}_{k/k-1} - r_k \quad (17)$$

$$\hat{X}_k = \hat{X}_{k/k-1} + K_ke_k \quad (18)$$

Gain calculation loop:

$$K_k = P_{k/k-1}H_k^T(H_kP_{k/k-1}H_k^T + R_{k-1})^{-1} \quad (19)$$

$$P_{k/k-1} = \phi_{k,k-1} P_{k-1} \phi_{k,k-1}^T + \Gamma_{k-1} Q_{k-1} \Gamma_{k-1}^T \quad (20)$$

$$P_k = (I - K_k H_k) P_{k/k-1} \quad (21)$$

Adaptive estimator:

$$r_k = (1 - d_{k-1}) r_{k-1} + d_{k-1} (Z_k - H_k \hat{X}_{k/k-1}) \quad (22)$$

$$R_k = (1 - d_{k-1}) R_{k-1} + d_{k-1} (e_k e_k^T) \quad (23)$$

$$d_{k-1} = \frac{1-b}{1-b^k}, 0 < b < 1 \quad (24)$$

The improved algorithm only estimates measurement noise statistics at real-time. Firstly, it does not need estimate process noise. Thus, the $q_{k-1}$ in (4) is removed. Secondly, it modifies (8) which is used to calculate gain $K_k$. The prior time measurement noise matrix $R_{k-1}$ is used to calculate gain, instead of $R_k$. Thirdly, it modifies (13) which calculates the measurement noise covariance matrix. The part with predicted error covariance matrix is removed to delate minus because the minus will result in filter divergence. Equation (13) changes into (23), which ensures the positive definiteness of $R_k$. Keeping the residual $e_k$ in formula to update the measurement noise covariance. If (23) keeps only $(1 - d_{k-1}) R_{k-1}$, there is no residual to estimate measurement noise covariance matrix. This will result in the fact that even if the $R_k$ is changing, it cannot change with real situation of system. Thus, only $(1 - d_{k-1}) R_{k-1}$ cannot ensure the stability of filtering and navigation precision. The algorithm needs residual $e_k$ to update.

### 3.1.2 The Flow Chart of Improved Algorithm

The flow chart of the improved Adaptive Extended Kalman Filter is shown as below:

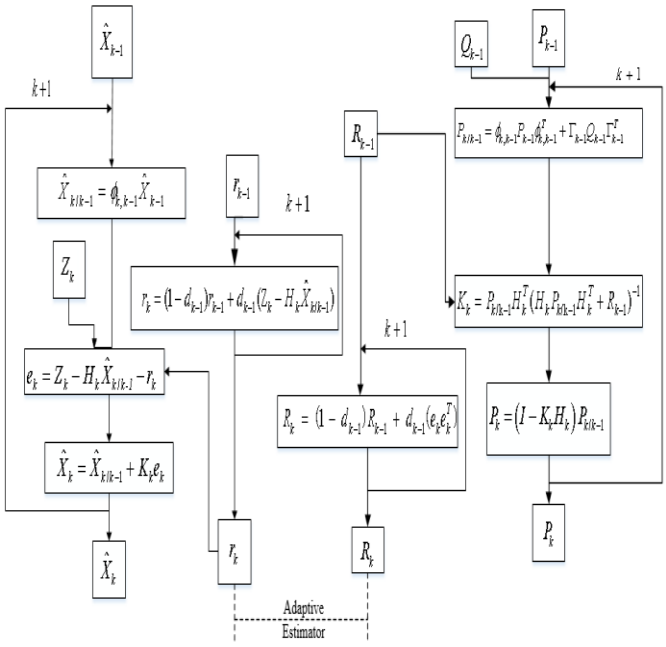


**Fig 2:** Flowchart of improved Adaptive Extended Kalman Filter

From Fig.2, the estimation update of the improved Adaptive Extended Kalman Filter algorithm is composed of three parts. The first part is state update. Based on the state transition matrix $\phi_{k,k-1}$, the algorithm makes the time prediction of system state variables, which can get $\hat{X}_{k/k-1}$. The second part is measurement update. The algorithm takes the predicted state variables $\hat{X}_{k/k-1}$, measurement noise average value $r_k$, measurement variables $Z_k$ as input, and makes least square estimation of system state variables, which can the estimated value $\hat{X}_k$. Then, the estimated value $\hat{X}_k$ becomes the system updated starting point of next time. The third part is adaptive estimator which adjusts $r_k$ and $R_k$ of system. The average value of measurement noise $r_k$ relies on the measurement variables $Z_k$ and the predicted state variables $\hat{X}_{k/k-1}$ to update. The measurement noise covariance matrix $R_k$ relies on residual $e_k$ to update.

To analyze the improved Adaptive Extended Kalman Filter's influence on the loosely-coupled SINS/GPS system, this paper adopts both the EKF and improved filter in the simulation. And it compares the results of two kinds of filters.

## 4. Simulation Results and Analysis

The initial values of latitude, longitude, height are39°,116°,1000m, respectively; velocity of east, north and up are 200m/s, 0m/s, 0m/s, respectively; roll angle is 0°, pitch up angle is 0°, yaw angle is 90°; gyro random constant drift is 0.1°/h; accelerometer random constant zero bias is 0.0001g. The white noise standard deviation of GPS position and velocity measurement are 6.5m and 0.46m/s, respectively. The forgetting factor is 0.978; filter period is 0.1s; the simulation time is 400s. The simulation results of velocity error and position error are shown in Fig.3 and Fig.4.

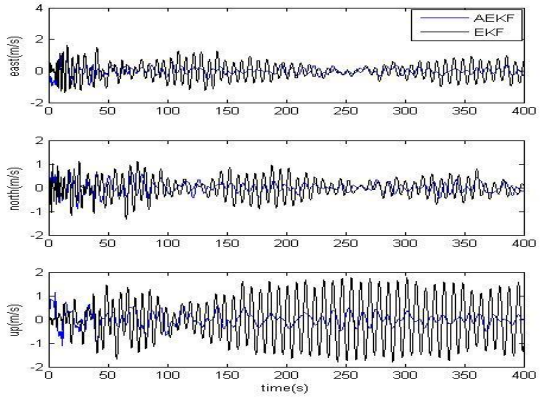


**Fig3:** Velocity error

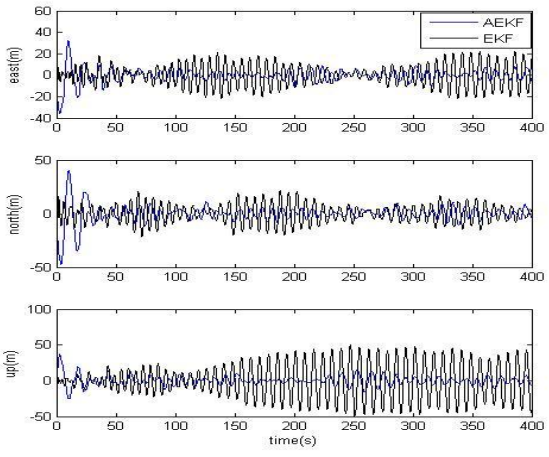


**Fig4:** Position error

From Fig. 3 and Fig.4, the blue line stands for the results of improved Adaptive Extended Kalman Filter, called AEKF for short, and the black line stands for the results of Extended Kalman Filter. Obviously, the velocity errors in all three directions calculated by AEKF are more steady and smaller than those calculated by EKF. Also, the position errors of ENU calculated by AEKF are smaller and more stable than those calculated by EKF.

Additionally, the error curves calculated by AEKF are smooth and convergent. The curves oscillate tens of seconds and converge rapidly. However, the error curves calculated by EKF are rough. The curves calculated by EKF oscillate hundreds of seconds and converge slowly.

Lastly, the error curves all oscillate between -2m/s and +2m/s.

The velocity error and position error of loosely-coupled SINS/GPS system are listed as below.

**Table 1:** AEKF and EKF algorithm velocity mean error of loosely-coupled SINS/GPS system

| Kalman Fliter | Velocity mean error (m/s) | | |
|---|---|---|---|
| | East | North | Up |
| EKF | 0.4242 | 0.3722 | 0.7978 |
| AEKF | 0.1760 | 0.1662 | 0.2179 |

**Table 2:** AEKF and EKF algorithm velocity error range of loosely-coupled SINS/GPS system

| Kalman Fliter | Velocity error range (m/s) | | |
|---|---|---|---|
| | East | North | Up |
| EKF | -1.3664~1.6319 | -1.3372~1.1106 | -1.7905~1.7705 |
| AEKF | -0.9668~0.9669 | -0.8801~0.9469 | -1.1236~1.1414 |

**Table 3:** AEKF and EKF algorithm position mean error of loosely-coupled SINS/GPS system

| Kalman Fliter | Position mean error (m) | | |
|---|---|---|---|
| | East | North | Up |
| EKF | 8.0434 | 6.8579 | 19.8866 |
| AEKF | 3.9850 | 4.9071 | 4.7367 |

**Table 4:** AEKF and EKF algorithm position error range of loosely-coupled SINS/GPS system

| Kalman Fliter | Position error range (m) | | |
|---|---|---|---|
| | East | North | Up |
| EKF | -21.9188~24.2358 | -21.4382~21.6867 | -47.9867~50.6766 |
| AEKF | -35.8597~32.6049 | -47.0345~40.0892 | -25.577~37.0980 |

**Table 5:** AEKF and EKF algorithm velocity RMS of loosely-coupled SINS/GPS system

| Kalman Fliter | Velocity RMS (m/s) | | |
|---|---|---|---|
| | East | North | Up |
| EKF | 0.5217 | 0.4071 | 0.9369 |
| AEKF | 0.2318 | 0.2180 | 0.2870 |

**Table 6:** AEKF and EKF algorithm position RMS of loosely-coupled SINS/GPS system

| Kalman Fliter | Position RMS (m) | | |
|---|---|---|---|
| | East | North | Up |
| EKF | 9.8577 | 8.3439 | 24.2267 |
| AEKF | 6.2181 | 8.1796 | 6.7595 |

The velocity mean error as well as position mean error shown in Tab.1 and Tab.3 of ENU calculated by AEKF, which are smaller than those calculated by EKF.

To be specific, the Up velocity mean error is the biggest of all direction's mean errors. The velocity mean error in Up direction calculated by EKF is 0.7978m/s, whereas, the Up one calculated by AEKF is only 0.2179m/s. The velocity mean errors in all three directions calculated by AEKF are 0.2482m/s, 0.206m/s, 0.5799m/s, which are less than those calculated by EKF, respectively.

For the position error, the position mean errors of ENU calculated by EKF are 8.0434m, 6.8579m, 19.8866m respectively. However, those calculated by AEKF are 3.9850m, 4.9071m, 4.7367m, respectively.

Especially, the position mean error in East direction calculated by AEKF is 4.0584m, which is less than that calculated by EKF. The position mean error in North direction calculated by AEKF is 1.9508m, which is less than that calculated by EKF. The position mean error in Up direction calculated by EKF is 15.1499m, which is more than that calculated by AEKF.

Tab.2 and Tab.4 demonstrate the velocity error range and position error range of East-North-Up, namely the smallest and biggest error value during filtering.

Tab.5 and Tab.6 indicate the RMS of velocity error and position error. Obviously, the RMS calculated by AEKF are smaller than those calculated by EKF.

Compared with EKF method, the approach that estimates $R_k$ by improved algorithm presented in this paper could improve the stability of filter, and reduce the velocity error as well as position error.

## 5. Conclusion

To deal with the problem that Kalman Filter cannot estimate noise statistics, the improved Adaptive Extended Kalman Filter is proposed to solve the problem. The improved algorithm modifies the adaptive estimator, and only adjusts the measurement noise covariance matrix to estimate the measurement noise statistics. The advantage of improved algorithm is that it has a simple structure and high calculating efficiency. The simulation results indicate that this improved adaptive algorithm can decrease positon error and velocity error. Also, the filtering errors of improved adaptive algorithm converge fast and fluctuate stably, which ensures the position precision and velocity precision.

## Acknowledgement

The authors acknowledge the opportunity to attend the Conference.

Thanks for the financial support from postgraduate school, Beijing Institute of Technology (BIT).

In addition, Yuyan Wang thanks for the academic guidance of her tutor, Xiuyun Meng. It's her tutor who helps a lot in learning professional knowledge of SINS/GPS integrated navigation system, and simulation of this model.

Also, the tutors from Harbin Engineering University, Jicheng Ding and Ye Wang give her lots of guide on academic, especially on GPS navigation. Moreover, Yuyan Wang thanks for the help from her senior in the laboratory. Her senior give her lots of technology guidance of Matlab simulation and how to construct the loosely-coupled model. Yuyan Wang thanks for the support from her family. Her parents support her to attend the international conference.

Also, Yuyan Wang thanks for the concern on the life from her friends, college mates, family, which gives her strength, courage and confidence.

Jilu Liu thanks for the support from his family, and thanks for his company Beijing Hangxing Machinery Manufacturing to provide this chance to visit Malaysia.

## References

[1] DJ Jwo, JH Shih, CS Hsu, KL Yu, "Development of a strapdown inertial navigation system simulation platform. Journal of Marine Science&Technology," 2014, vol.22(3):381-391.

[2] SS Wankhade, Manoj Kumar Singh, Balramdu, "The Real Time Navigation Tracking Service Based on GPS System.," Proc. International Journal of Advanced Research in Electrical Electronics and Instrumentation Engineering (IJAREEIE 05), IJAREEIE press, May 2016, pp2320-3765.

[3] Wang Lijun,Zhao Huichang ,Yang Xiaoniu, "The Modeling and Simulation for GPS/INS Integrated Navigation System," 2008,IEEE.

[4] Kalman R E, “A new approach to liner filtering and prediction problem,” Journal of Basic Eng (ASME),1960,82:95-108.
[5] Ding W, Wang J, Chris Rizos, et al, “Improving Adaptive Kalman Estimation in GPS/INS Integration,” Journal of Navigation,2007, vol.60(3):517-529.
[6] Yuan Xu, Xiyuan Chen, Qinghua Li, “Adaptive Iterated Extended Kalman Filter and Its Application to Autonomous Integrated Navigation for Indoor Robot,” The Scientific World Journal, vol.2014, Article ID 138548, 7 pages, 2014.
[7] Dongkyun Kim, Jihyun Ha, Kwanho You, “Adaptive Extended Kalman Filter Based Geolocation Using TDOA/FDOA,” International Journal Control and Automation, vol.4, no.2,2011.
[8] Liu Huadi, Duan Zhiming, Wang Lei, “Simulation Research on the Technology of the Loosely-coupled SINS/GPS Integration.,” Journal of Shenyang Ligong University,2012, vol.31(6):42-50.
[9] WANG Jun-shuai,WANG Xin-long, “Simulation and Analysis of SINS/GPS Tightly Coupled and Loosely Coupled Integrated Navigation System,” Aero Weaponry, 2013.
[10] Wang Lei, Shi Fengfeng, Kou Kaiyang, et al, “Modelling and simulation of SINS/GPS intergrated navigation system for UAV,” Engineering of Surveying and Mapping, 2016, vol.25(10):17-19.
[11] Khan Badshah, Qin Yongyuan, “Tightly Coupled Integration of a Low Cost MEMS-INS/GPS System using Adaptive Kalman Filtering,” Intenational Journal of Control and Automation, 2016, vol.9(2):179-190.
[12] Xue Li, Gao Shesheng, Hu Gaoge, “Adaptive Sage-Husa particlefiltering and its application in integrated navigtion,” Journal of Chinese Inertial Technology, 2013, vol.21(1):84-88.
[13] Li Dan, Qin Yongyuan, MeiChunbo, “An Improved Adative Kalman Filter Algorithm for SINS/GPS Integrated Navigation System,” Journal of Measurement and Control Technology,2011, vol.30(3):114-116.