International Journal of Engineering & Technology, 7 (4.27) (2018) 63-66

International Journal of Engineering & Technology

Website: www.sciencepubco.com/index.php/IJET

Research paper



Development of Universal Wheelchair Transporter

N.F.A Zulkepli.[1], S. Khusairi[2], M.S.B Shaari[3], N.S Khusaini [4]
N Aziz.[5], K.I Sainan [6] Z. Mohamed [7]*

[1]Faculty of Mechanical Engineering Universiti Teknologi MARA, Shah Alam Selangor, Malaysia
[2] Sports Engineering & Artificial Intelligent Center, Faculty of Mechanical Engineering Universiti Teknologi MARA, Shah Alam Selangor, Malaysia
**Corresponding author E-mail: zulkifli127@salam.uitm.edu.my*

Abstract

This work introduces a new universal wheelchair transporter to transport a conventional wheelchair from one point to another. The chosen design concept had been selected using Pugh chart selection method [13], considering all aspect contributed that give the highest weightage. The 3D design utilized CATIA software to visualize the product. Mecanum wheels were chosen to move the platform due to its flexibility and maneuverability in any direction without turning the universal transporter. The objective of this project is to develop a fully functional universal wheelchair transporter to transport a patient from one room to another room in the hospital. The performance of the product design is then tested using Finite Element Analysis and shows good results.

Keywords: *Wheelchair, Transporter, Autonomous system, Mecanum wheel.*

1. Introduction

Utilization of wheelchair is common in the hospital to ease the movement of the patient from one point to another point. Most hospitals used the conventional wheelchair that needs full assistance from the caretaker to transport the patient even for a simple short straight movement to reach the desired destination [1]. The improvement started with the transformation of the conventional wheelchair to electrical wheelchair that used the joystick as the movement controller, but this will only compatible for the patient with lower extremity motor impairments [2]. To overcome this issue many inventions of a powered wheelchair with intelligent control system are created to improve the mobility of patient with severe disability [3]. Therefore, the patient with both upper and lower extremity motor impairment can benefit from the improvement of technology used on the wheelchair.

Improvements had been done on the controlled system by upgraded from manually to semi auto and fully autonomous controlled system. For example, wheelchair is controlled using vision based controlled [4], speech controlled [2], brain-controlled interfaces [5], and hybrid (gesture and speech) controlled system [1] to run the wheelchair. Most of the researcher are focusing on the control system of the wheelchair including the maneuverability, navigational intelligence, and multi-modal control interfaces [3]. The enhancement of technology has resulted in many developed smart wheelchair and some of the wheelchairs are being commercialized for instance NavChair [6], Smart Power Assistance Module (SPAM) [7] and Mobility Aid for and disabled people (MAid) [8]. However, the inventions are still stuck with the idea of installing the motor to the conventional wheelchair concept and connected with a certain type of control system. Hence, this action will benefit only a unit of the wheelchair in the hospital.

The main purpose of smart wheelchair that has been reviewed is to transport patient with minimum assistance from one point to another point. Therefore, by introducing the universal wheelchair transporter (UWT), the purpose of a smart wheelchair will be fulfilled and at the same time utilizing the existing conventional wheelchair in the hospital. The transporter can be reused by another user, once the transporter carrying wheelchair with patient reach the destination. This will avoid authorities from spending much money on replacing to a high cost smart wheelchair or abandon the existing conventional wheelchair in the hospital. This low-cost innovation used 30 mm x 30 mm aluminium profile as the skeletal structure to ensure the weight carried can be sustained. The total load carried by the transporter are estimated about 80 kg consist of the 60 kg load of average body mass Asian [9] and 20 kg by the wheelchair. The size of the transporter which is 832 mm x 640 mm is also taken into consideration to ensure the transporter is able to transport any standard conventional wheelchairs that are usually used in the hospital. Besides that, the transporter that is installed with technology such as Mecanum wheel will ease the process of transporting the patient in the wheelchair and will reduce the need of assistance as it offered unique movement such as sideway direction, diagonal direction as well as rotation (omnidirectional mobility). The motion of the transporter is powered using power window motor and assist with line follower sensor to ensure the patient are safely transported to the goal point.

2. Mechanical Design

Technology enhancements have changed the perception on the working principle of the wheel. Wheel are normally rolling to make a movement are improve to be able moving in sideway, diagonal direction as well as rotation are known as Omni drive or omnidirectional mobility. This innovation is done by comprises a rim on which eight lose spherical rollers are fitted at an angle of 45 degrees. This has lead conventional wheelchair to imply the technology advantage provided by Omni drive or omnidirectional mobility for instances, TinMan [10] Office wheelchair with high

Copyright © 2018 Authors. This is an open access article distributed under the Creative Commons Attribution License, which permits unrestricted use, distribution, and reproduction in any medium, provided the original work is properly cited.

Manoeuvrability and Navigational Intelligence (OMNI)[11] and Intelligent Robotic Wheelchair (iRW) [12].
All the invention and innovation of the wheelchair technology show that the advantage gives by the Mecanum wheel help the movability of the patient in the wheelchair. One huge advantage contributed by the Mecanum wheel is the movement provided without shifting the wheel and this gives the result of zero turning radius while having a cornering [12].
In this project, 4 Mecanum wheels (Figure 1) are used due to extraordinary movement offered, sustainability provided to withstand the load subjected on the top of the transporter and zero turning radius taken while having cornering of 90° or 180°. The working principle and motion of the mecanum wheel is shown in Figure 2.

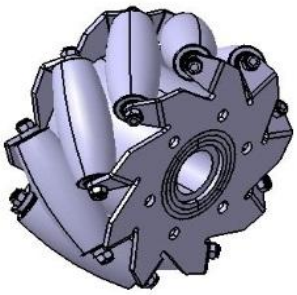

Fig. 1: Mecanum wheel design

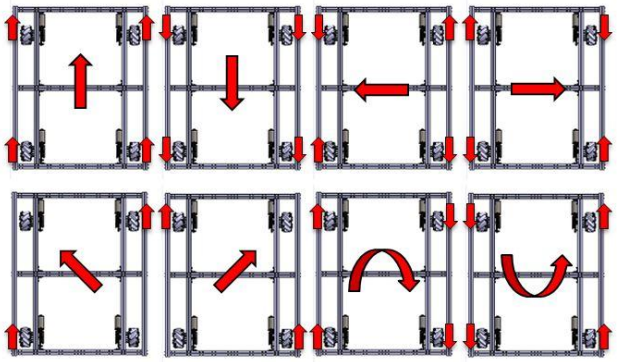

Fig. 2: Mecanum wheel working principle

The different between this project and developed smart wheelchair utilized Mecanum wheel such as OMNI and iRW are the attachment location of the Mecanum wheel. The OMNI and iRW attached the Mecanum directly to the wheelchair while this project attached the Mecanum wheel to the transporter to benefit all conventional wheelchairs in the hospital. Hence, the purpose of transporting the patient in the wheelchair by positioned the wheelchair on the top of the transporter to the desired destination smoothly can be achieved using the Mecanum wheel.
The aluminium profile (Figure 3) is a square shape beam having a slot on every surface to let the jointing process easier. The hole at the centre also gives the advantage to create a joint at the end of the beam with other components. In developing country like India, low in cost assistive device such as wheelchair are developed to help the disabled people and one of the factors that are lowering the cost is the material used.
The aluminium profile was used due to the ability to sustain the load, the low in cost and aesthetic value factor. This factor is similar to this project which to lowering the cost of developing the transporter, the aluminium profile was chosen. Besides, the non-permanent joint to create the transporter make it easier to make an adjustment and this also can reduce the replacement cost.
The aesthetic value of the transporter is maintained due to the material are non-corrosive metal and also can be improved by making the slot of the aluminium profile act as the wire housing. Therefore, the transporter is made up of the aluminium profile as it gives advantage on high strength, low in weight, flexible in join the part and has high aesthetics value.



Fig. 3: Aluminium profile design

Aluminium profile is made of Aluminium alloy 6061-T4. The physical properties of this alloy are shown in Figure 4 below:

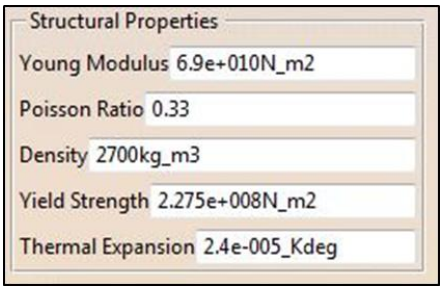

Fig. 4: Structural properties of aluminium alloy 6061- T4

3. Design Process

3.1. Mechanical Design

Universal Wheelchair Transporter project involves process of transporting conventional wheelchair. Thus, the standard dimension of the conventional wheelchair (Figure 5) is need to be determined to ensure the transporter is capable of carrying the patient and the wheelchair on top of the transporter. The material used also play a main role in order to support the load by the patient and the wheelchair itself.
The objective of transporting the patient on the wheelchair smoothly can be achieved by considering of the mechanism that will be utilized to move the transporter. This project can be realized by undergoing two important processes which are design and fabrication process.
In the design stage, the main parts are divided into two sections which are the skeletal structure (Figure 6) and the wheel section (Figure 7). First, a standard type conventional wheelchair used in the hospital are determined in order to ensure the transporter has the ability to carry the conventional wheelchair on top of the structure. The dimensions of the transporter also needs to be considered in order to ensure it could pass through a door and narrow corridor in the hospital. Besides that, the method of joining needs to be non-permanent to allow flexibility for the process of replacement of any part

MODEL									
S	380	560	955	460	510,485,460	230	780	400	12.1
J	400	580	955	460	510,485,460	230	780	400	12.6
F	430	610	955	460	510,485,460	230	780	400	13.1

Fig 5: Dimension of conventional wheelchair

The complete wheel assembly consist of dc motor, Mecanum wheel and a motor mounting and bracket. The custom bracket and mounting need to be properly designed and fabricated in order to attach the Mecanum wheel to the transporter. Water jet cutting technique had been utilized to produce the desired shape of both mounting and bracket.

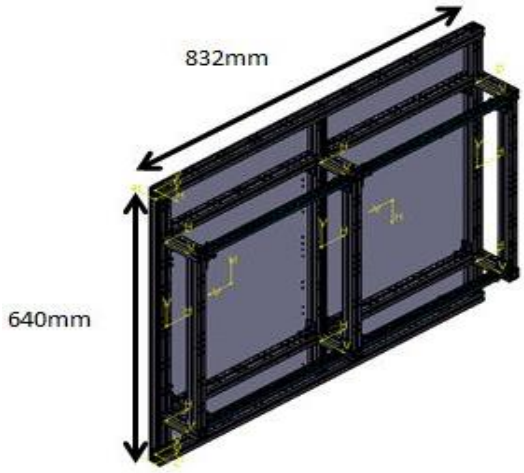

Fig. 6: Design of Skeletal Structure Part of the Transporter

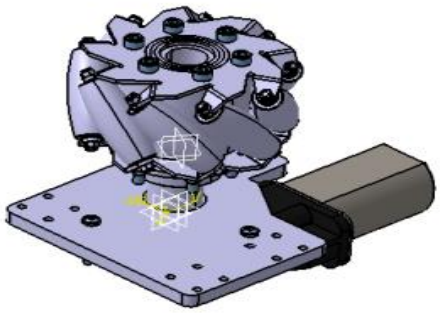

Fig. 7: Design of the complete wheel part of the transporter

3.2. Fabrication

In this process, all hardware and the standard components had been obtained. The aluminium profile has been acquired custom made based on the specification required. The assembly process had been carried out by a simple joining process using screw, bolt, and nut. Apart from this, bracket and motor mounting were fabricated using water jet process. The bracket is used to connect the wheel, motor coupling and motor mounting to the based skeletal structure. The completed assembly structure is shown in Figure 8.



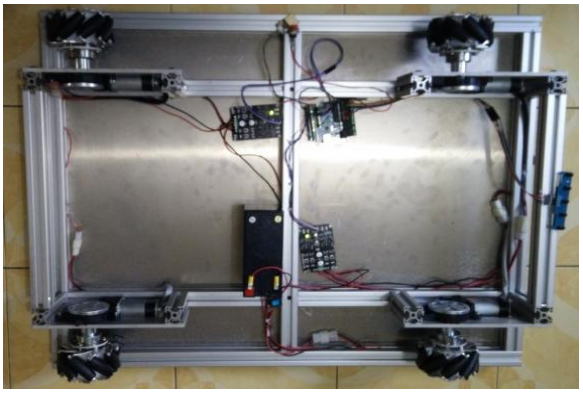

Fig. 8: Complete fabrication process

4. Results & Discussion

There are slight differences between the initial design and the real transporter due to continuous improvement that has been made throughout the process (Figure 9). The skeletal structures are improved to reduce the displacement of the structure when the actual weight of the patient acted on top of the transporter.

From the analysis, the motor mounting is the most critical area need to be considered. It is shown that the mounting received the highest stress and displacement. In order to reduce the stress and displacement, the centre column of the aluminium profile is replaced with 2 aluminium profile closer to the mounting. The design of the mounting is also modified to ensure the transporter can sustain the load with tolerable clearance.

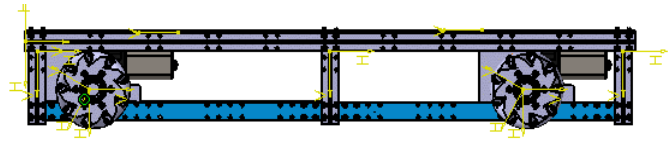

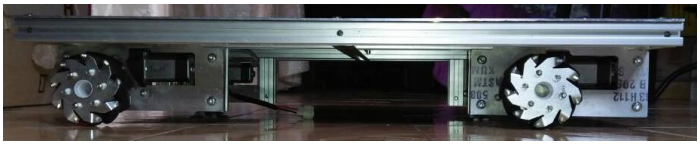

Fig. 9: Side view of transporter design and the real transporter

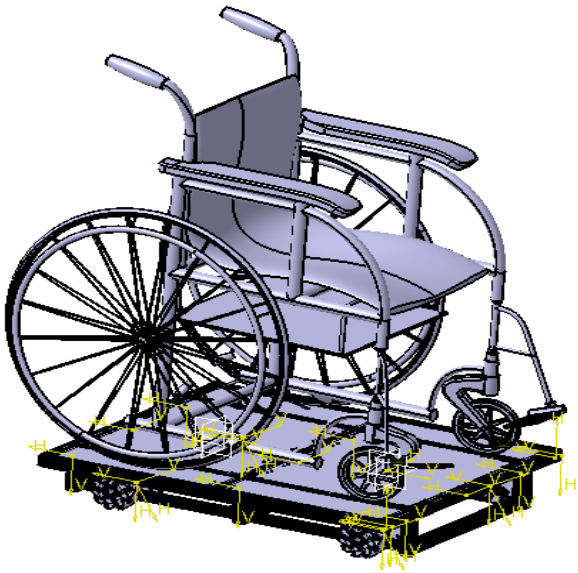

Fig.10 Universal wheelchair transporter design

The transporter is analysed using concentrated force. Four points of concentrated force are subjected on the transporter are the wheel of the wheelchair, as in Figure 10.

The Von Misses Stress (VMS) of the transporter subjected to 800 N force acted at each concentrated point is shown in Figure 11. The analysis shown that the highest stress produced is 5.49E7 N/m^2 and at the area close to the mounting of the motor. However, the highest value of stress is still below the value of aluminium alloy 6016-T4 yield strength, 2.275 $x10^8$ N/m^2. Hence, the transporter have the ability to sustain the load produced by the patients and the wheelchair on top of the transporter.

Next, the performance of the universal transporter is tested by applying 800 N force to each concentrated point as in Figure 12. The analysis shown that the highest displacement produced is 0.156 mm and at position close to the motor mounting. However, the highest value of displacement is within tolerable value and does not disturb the movement of the transporter with and without load.

5. Conclusion

From both the VMS and displacement analysis results, it can be concluded that the proposed design has the strength and ability to withstand and support the weight and load by the patient and the wheelchair (up to 80 kg). This project is still at the initial stage where the ramp and the wheelchair mounting on the platform need to be properly design and analyse ergonomically and economically in order for the proposed system can be commercialized and available in the market.

In the future, the main aspect that needs to take into account is safety factor as this project deals with disable patient and elderly. Safety features that need to be considered in this project are locking mechanism and stopper to increase the safety factor even though the conventional wheelchair itself has already installed with locking mechanism.

A good wheelchair ramp is also need to be designed in order to reduce the effort of nurse or patient to push up the wheelchair on the transporter. It will be safer if the height of the transporter can be reduced but with suitable clearance.

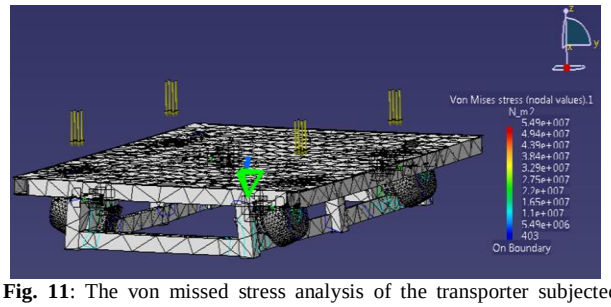

Fig. 11: The von missed stress analysis of the transporter subjected to concentrated force.

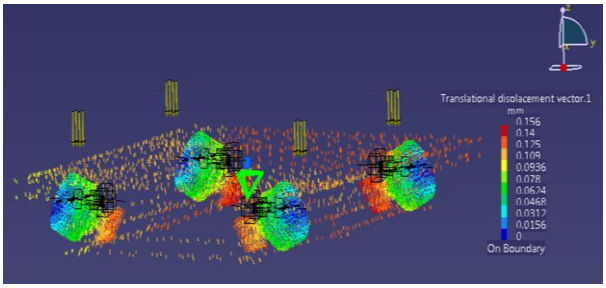

Fig. 12: The displacement analysis of the transporter subjected to concentrated force.

References

[1] A. Ruíz-Serrano, R. Posada-Gómez, A. M. Sibaja, G. A. Rodríguez, B. E. Gonzalez-Sanchez, and O. O. Sandoval-Gonzalez, (2013) "Development of a Dual Control System Applied to a Smart Wheelchair, using Magnetic and Speech Control," *Procedia Technol.*, vol. 7, pp. 158–165.

[2] A. Škraba, R. Stojanović, A. Zupan, A. Kološvari, and D. Kofjač, (2015) "Speech-controlled cloud-based wheelchair platform for disabled persons," *Microprocess. Microsyst.*, vol. 39, no. 8, pp. 819–828.

[3] A. S. Kundu, O. Mazumder, P. K. Lenka, and S. Bhaumik, (2017) "Omnidirectional Assistive Wheelchair: Design and Control with Isometric Myoelectric Based Intention Classification," in *Procedia Computer Science*, vol. 105, pp. 68–74.

[4] V. K. Narayanan, F. Pasteau, M. Marchal, A. Krupa, and M. Babel, (2016) "Vision-based adaptive assistance and haptic guidance for safe wheelchair corridor following," *Comput. Vis. Image Underst.*, vol. 149, pp. 171–185.

[5] H. Jiang, T. Zhang, J. P. Wachs, and B. S. Duerstock, (2016) "Enhanced control of a wheelchair-mounted robotic manipulator using 3-D vision and multimodal interaction," *Comput. Vis. Image Underst.*, vol. 149, pp. 21–31.

[6] S. P. Levine, D. A. Bell, L. A. Jaros, R. C. Simpson, Y. Koren, and J. Borenstein, (1999) "The NavChair Assistive Wheelchair Navigation System," *IEEE Trans. Rehabil. Eng.*, vol. 7, no. 4.

[7] R. Wigton, (2017) "SPAM – Smart Power Assisted Module (ie. smart wheelchair)."

[8] E. Prassler, J. Scholz, and P. Fiorini, (2001) "A robotic wheelchair for crowded public environments," *IEEE Robot. Autom. Mag.*.

[9] S. C. Walpole, D. Prieto-Merino, P. Edwards, J. Cleland, G. Stevens, and I. Roberts, (2012) "The weight of nations: an estimation of adult human biomass," *BMC Public Health*, vol. 12, no. 1, p. 439.

[10] D. P. Miller and M. G. Slack, (1995) "Design and testing of a low-cost robotic wheelchair prototype," *Auton. Robots*.

[11] U. Borgolte, H. Hoyer, C. Bühler, H. Heck, and R. Hoelper, (1998) "Architectural Concepts of a Semi-autonomous Wheelchair," *J. Intell. Robot. Syst.*, vol. 22, pp. 233–253.

[12] P. E. Hsu, Y. L. Hsu, K. W. Chang, and C. Geiser, (2012) "Mobility assistance design of the intelligent robotic wheelchair," *Int. J. Adv. Robot. Syst.*.

[13] N.F.A Zulkepli, (2017) "Design and Development of Universal Wheelchair Transporter,"Final Year Project Thesis.