International Journal of Engineering & Technology, 7 (4.25) (2018) 181-184

International Journal of Engineering & Technology

Website: www.sciencepubco.com/index.php/IJET

Research paper

Design and Analysis of a Formula SAE Car Engine Restrictor

Amir Radzi Ab. Ghani*, M. Fitri Hassan, Ramzyzan Ramly

Faculty of Mechanical Engineering, Universiti Teknologi MARA (UiTM), Malaysia
**Corresponding author E-mail:*amirradzi@gmail.com*

Abstract

Formula Society of Automotive Engineers (SAE) is a world renowned automotive design competition that requires engineering students to design and test a single seater race car. The car utilizes a four stroke motorcycle engine with a maximum displacement of 781 cc. The rules require the engine to be restricted using a 20 mm diameter air intake. The challenge is to design an engine restrictor that enables the engine to operate efficiently with minimal power loss despite the significant reduction of volumetric efficiency. The engine restrictor consists of nozzle, plenum (air-box) and runner. CATIA V5 is used to design the restrictor system and ANSYS CFX was used to analyse the air flow. Several nozzle and plenum designs were simulated to determine the best design. It was discovered that the converging nozzle angle, position of restrictor hole inlet and plenum shapes have significant effect on the performance of the restrictor system. Nozzle with converging angle of 18° and inlet hole position of 59.5 mm gave the lowest pressure difference of 8.698 kPa. Engine restrictor Design 3 gave the lowest overall pressure difference of 7.73 kPa

Keywords: *Formula SAE, engine restrictor, computational fluid dynamics (CFD)*

1. Introduction

Formula Society of Automotive Engineers (SAE) is a world renowned automotive design competition that requires engineering students to design and test a single seater race car. The car utilizes a four stroke motorcycle engine with a maximum displacement of 781 cc. The rules require the engine to be restricted using a 20 mm diameter air intake resulting in a significant drop of volumetric efficiency. This is part of the challenge where the students need to design and analyse an engine restrictor system and remap the engine to ensure that it is working efficiently with minimal power loss. The competition aims to provide real world engineering experience to students and better prepare them for work especially in the automotive and other highly intensive engineering sectors.

2. Engine Restrictor System

The simplest form of engine restrictor is a circular plate with an inlet hole in the centre. Air restrictor is installed in race car to provide a fair competition to the contestants. The rules and regulations of Formula SAE state that 'a single circular restrictor of 20 mm diameter must be placed in the intake system and all engine airflow must pass through the restrictor in order to limit the power' [1]. The 20 mm throat of air restrictor functions to limit the power of the engine by decreasing the volumetric efficiency Figure 1 illustrates the effect of engine restrictor on the engine power output where at higher engine speed there is no increase in power [2].

Generally, an engine restrictor system consists of nozzle, plenum and runner. Figure 2 shows a typical Formula SAE engine restrictor system [3]. S. Raj et al [4] analysed the Formula SAE air intake system by varying the nozzle length and angle, plenum volume and runner length. V.D. Ravindra et al [5] varied the converging and diverging nozzle angles to determine the optimum angle that gave minimum pressure difference between upstream and downstream flows. S.A. Pranav [6] highlighted the reduction of air density from the upstream to downstream flow which had detrimental effect on the engine performance.

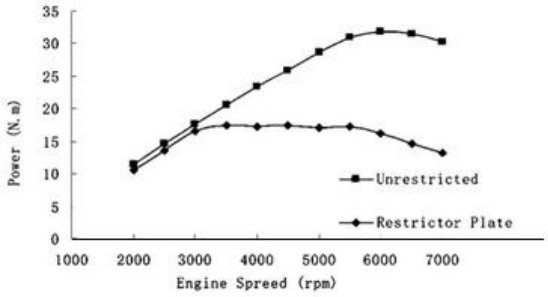

Fig. 1: Effect of air restrictor on the engine power [2]

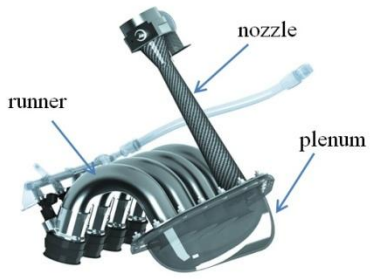

Fig. 2: Example of Formula SAE car engine restrictor system [3]

S. Arbaz [7] studied the effect of plenum volume on the engine response. The plenum must be of sufficient volume usually about 2.5 times of the engine cubic capacity to ensure that the engine does not choke during the suction stroke. Also, runner length has significant effect on the engine peak power and response. G. Vichi

Copyright © 2018 Authors. This is an open access article distributed under the Creative Commons Attribution License, which permits unrestricted use, distribution, and reproduction in any medium, provided the original work is properly cited.

[8] investigated the effect of variable geometry intake system on the Formula SAE car engine response. It was found that increasing the plenum volume increase the power output but at the expense of slower engine response. E.J. Shaughnessy and N. Holtz [9] demonstrated engine power at different engine speed (rpm) depends on runner length. Short runner gives high peak power while long runner gives low peak power. As a result, short runner is used for high (top) end power and long runner is used for low end torque [10].

2.1. Engine Restrictor Design

Based on the literature review and previous design guidelines, an engine restrictor system is designed for the upcoming 2019 UiTM Formula SAE car. The engine is a four stroke parallel twin 650 cc Kawasaki ER6 engine. It makes about 65 BHP and 65 Nm of torque. The restrictor system is modelled using CATIA V5 CAD software. Figure 3 shows three types of restrictor design. Design 1 has a cylindrical plenum with the nozzle mounted on the side of the plenum. Design 2 has a combination of half cylindrical and truncated rectangular pyramid shape plenum with the nozzle mounted on the top middle section of the plenum. Design 3 has a cylindrical plenum with the nozzle mounted on top middle section of the plenum. All designs have 2 runners attached to the middle bottom section of the plenum.

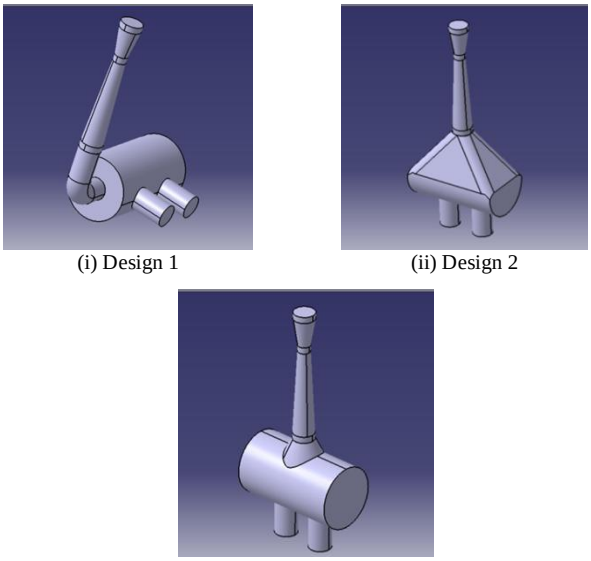

(i) Design 1 (ii) Design 2

(iii) Design 3

Fig. 3: Different types of restrictor design (i) Design 1, (ii) Design 2 and (iii) Design 3

The converging-diverging nozzle has a length of 200 mm and diverging angle, θ_2 of 6°. Parameters to be varied are the converging nozzle angle and the inlet hole position. Figure 4 shows the parameters for the nozzle. θ_1 is the converging nozzle angle and X is the inlet hole position.

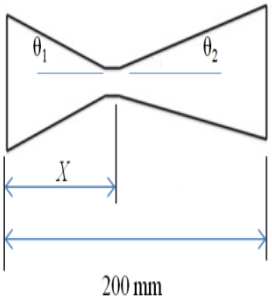

Fig. 4: Converging and diverging nozzle parameters

3. CFD Simulation

The restrictor system is analysed using ANSYS CFX software. Prior to the parametric study of the nozzle using CFD, a grid independent test was carried out on the first model to determine the suitable element size. Initial value of element size was based on literature review. From the test results, mesh size of 2 mm and orthogonal quality of 0.851 were specified. Altogether 14147 nodes and 13003 elements were created. A standard k-epsilon turbulent method was selected for the viscous model. Initial fluid velocity of 8.9 m/s and ambient temperature of 25°C were specified. A steady state, single phase flow is used for the solver. Number of iteration of 100 with double precision method is specified. Nine simulations were carried out to study the effect of converging angle and inlet hole position on the airflow. Table 1 shows the simulation parameters for the nozzle.

Table 1: Nozzle simulation parameters

Converging angle θ_1 (degree)	Inlet position X (mm)
18	59.5
16	59.5
14	59.5
18	114.4
16	114.4
14	114.4
18	149.3
16	149.3
14	149.3

From the results, the best nozzle design is selected and combined with the plenum for the subsequent analysis. The flow analysis for the three restrictor designs is then carried out to determine the best performing restrictor system. Figure 5 shows the complete CFD model of Design 1.

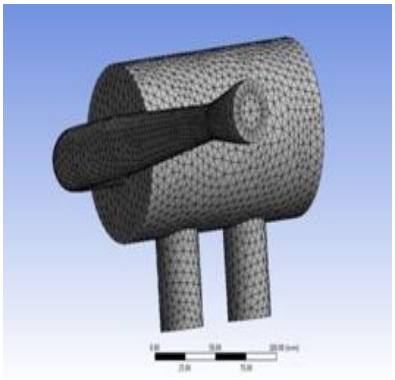

Fig. 5: CFD model of Design 1

4. Results and Discussion

Figure 6 shows the pressure contour for the nozzle with converging angle, θ_1 of 18° and inlet hole position, X of 59.5 mm. Figure 7 shows the pressure distribution along the nozzle axis. There is a sharp drop of pressure as the air passes through the inlet hole. This is due to the venturi effect where air flows faster through a smaller cross sectional area opening. Further downstream, as the air flow slows down, there is a gradual increase of pressure. The nozzle with the least pressure difference between air inlet and outlet is chosen as the best design. Further increasing the length of the diverging section after the inlet hole opening may increase the pressure. However, due to space limitation of the Formula SAE car, there is a maximum limit on the size of the air restrictor system. The selected dimension was chosen to satisfy the engine packaging requirement.

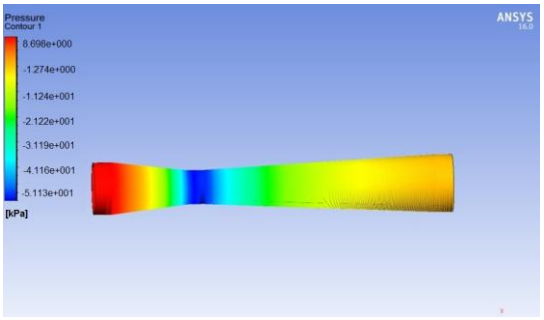

Fig. 6: Pressure contour for nozzle with converging angle, $\theta_1 = 18^o$ and inlet hole position, $X = 59.5$ mm

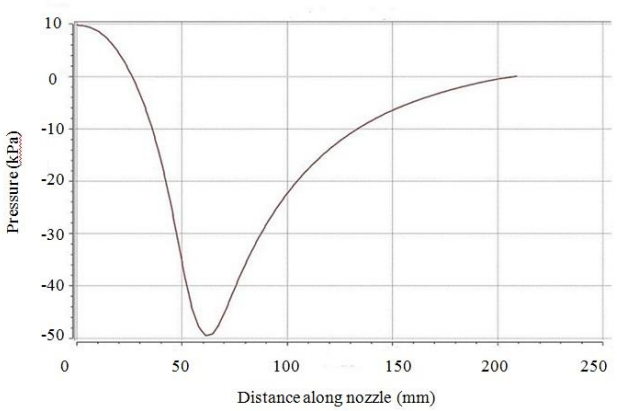

Fig. 7: Pressure vs distance along nozzle axix with converging angle, $\theta_1 = 18^o$ and inlet hole position, $X = 59.5$ mm

Table 2 shows the air inlet and outlet pressure difference for nozzles with different converging angle and inlet hole position. For nozzle with inlet hole position of 59.5 mm, reducing the converging angle increased the pressure difference. On the other hand, for nozzles with inlet hole positions of 114.4 mm and 149.3 mm, reducing the converging angle lowered the pressure difference. For nozzle with inlet hole position of 149.3 mm, varying the converging angle has significant effect on the pressure difference. Inlet hole position has significant effect on the pressure difference for all nozzles. From the results, it can be deduced that nozzle with an inlet hole closer to the air intake and high converging angle will give a low pressure difference. However, the converging angle and inlet hole position will also need to take into account the size of the throttle body that will be used for the engine. The nozzle with converging angle of 18° and inlet hole position of 59.5 mm gave the lowest pressure difference and therefore will be attached to the plenum for the analysis of the complete engine restrictor system.

Table 2: Pressure difference between air inlet and outlet with different converging nozzle angle and inlet hole position

Converging angle θ_1 (degree)	Inlet position X (mm)	Pressure difference (kPa)
18	59.5	8.698
16	59.5	12.43
14	59.5	16.64
18	114.4	28.87
16	114.4	26.94
14	114.4	15.18
18	149.3	62.26
16	149.3	46.36
14	149.3	22.42

Figures 8 and 9 show the pressure and velocity contour of Design 1 respectively. There is a drop in pressure inside the plenum. This could be due to the sudden change in airflow direction and highly turbulent flow inside the plenum. As the air exits the plenum and enters the runner, there is a further slight decrease in pressure. It is desirable to have high pressure in the plenum and runner to ensure sufficient air entering the combustion chamber during the engine induction stroke.

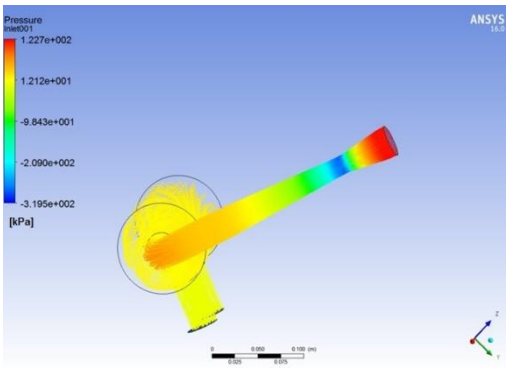

Fig. 8: Pressure contour for Design 1

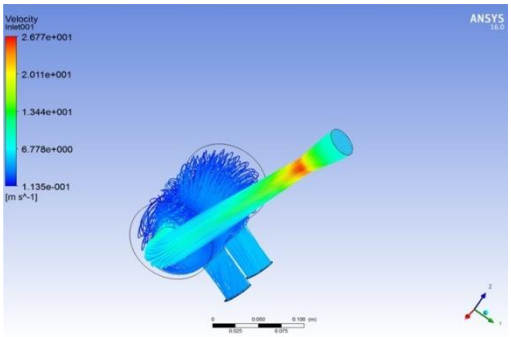

Fig. 9: Velocity contour for Design 1

Table 3 shows the pressure difference between the air inlet and outlet for all designs. Design 3 has the lowest pressure difference. Positioning of the nozzle at the top middle section of the plenum allows better airflow into the plenum resulting in minimal pressure drop.

Table 3: Pressure difference between air inlet and outlet for all designs

Type	Pressure difference [kPa]
Design 1	11.05
Design 2	8.162
Design 3	7.63

5. Conclusion

An air restrictor system for the upcoming UiTM Formula SAE car has been designed and analysed. Results showed that the converging nozzle angle and inlet hole position have significant effect on the pressure difference between air inlet and outlet. Nozzle with converging angle of 18° and inlet hole position of 59.5 mm gave the lowest pressure difference. Overall, the complete engine restrictor of Design 3 gave the lowest pressure difference and will be further refined in terms of structural strength and integration with engine system.

Acknowledgement

Special thanks to UiTM Motorsport team, advisors from the Automotive Research and Testing Centre (ARTeC) and Faculty of Mechanical Engineering, Universiti Teknologi MARA (UiTM) for their technical and financial support.

References

[1] 2017-18 Formula SAE® Rules –September 13, 2017

[2] Han-chi H & Hong-Wu H, Yi-jie B (2012), Optimization of intake and exhaust system for FSAE car based on orthogonal array testing. International Journal of Engineering and Technology, 2(3), 392-396.
[3] https://www.carbon3d.com/stories/hornet-racing-csu-sacramento-improves-formula-sae-engine-performance-csu-sacramento/
[4] Raj S, Singh AK, Srivastava T & Vibhanshu V (2016), Analysis of air intake for Formula SAE vehicle. 5th International Symposium on "Fusion of Science & Technology, 346, 457-460.
[5] Ravindra VD, Nikhil M & Yeshodara B (2015), Design and optimisation of a FSAE restrictor with structured mesh. International Journal of Science and Research (IJSR), 4, 1995-1997.
[6] Pranav SA (2014), Research and optimization of intake restrictor for Formula SAE car engine. International Journal of Scientific and Research Publications. 4, 1-5.
[7] Arbaaz S (2017), Air flow optimization through an intake system for a single cylinder Formula Student race car. International Journal of Engineering Research & Technology, 6(1), 183-188.
[8] Vichi G, Romani L, Ferrari L & Ferrara G (2015), Development of an engine variable geometry intake system system for Formula SAE application. Energy Procedia, 81, 930-941.
[9] Shaughnessy EJ & Hotz N (2014), An induction design for restricted race engines. Master of Science in the Department of Mechanical Engineering and Materials Science, Duke University, Durham, NC 27708, USA.
[10] Sawant PM, Sawant SS, Gurav PN, Nivalkar PS & Waghmere (2018), Analysis of air intake for Formula Student race car. International Research Journal of Engineering and Technology, 5(4), 4254-4258.