International Journal of Engineering & Technology, 7 (4.26) (2018) 108-111

International Journal of Engineering & Technology

Website: www.sciencepubco.com/index.php/IJET

Research paper



Design of Thumb Exoskeleton Rehabilitation Device

Abdul Rahman Mohamed Affandi[1], Shahrul Azam Abdullah[2]*

[1 2] Faculty of Mechanical Engineering, Universiti Teknologi MARA, Shah Alam, Selangor, Malaysia
**Corresponding author E-mail: shahrulaazam@salam.uitm.edu.my*

Abstract

Thumb nerve injury is a common injury that will affect the movement of the thumb. Exoskeleton for hand rehabilitation typically focus on finger flexion extension and do not support thumb finger opposition, a crucial function for object grasping. This paper presents the mechanical design, implementation, preliminary evaluation and proof of concept of a portable thumb exoskeleton to assist thumb opposition movements and also design of a thumb exoskeleton rehabilitation device. The thumb exoskeleton is a device to help patients during therapy and rehabilitation process. The materials of all mechanical parts n exoskeleton were 3D printed and Arduino UNO was used for movement control. The thumb exoskeleton mechanisms are combined CMC abduction-adduction and CMC flexion-extension to move the thumb using linear actuator. Linear actuator controls CMC abduction-adduction motion where when the linear actuator is fully retracts; it will conduct the CMC joint into abduction position. When the linear actuator extends, it will conduct the CMC joint into adduction position

Keywords: *thumb exoskeleton, abduction-adduction, flexion-extension, 3D print, linear actuator, therapy*

1. Introduction

The practice to rehabilitate the injury is called rehabilitation process. The patients have to follow the procedure of the process until they recover. Rehabilitation process is the design of treatment to facilitate recovery from injury, disease, or illness to the situation as normal as possible. The purpose of rehabilitation is to restore some or the entire patient's physical, sensory and mental capabilities that were lost due to injury, illness, or disease. Rehabilitation process includes helping patients to compensate for deficits that cannot be reversed medically.

Opposable thumb is a characteristic of an unusual anatomy of the hand that will increase the flexibility of the hand. Thumb opposition, involving flexion, abducting, and medical rotation so that the surface of the pulp can call another digit. Recovery is important because the hand fingers and thumb play an important role in carrying out daily tasks, such as gripping and pinching. Motion thumb was much more complicated than the other fingers, at the same time the most important digit on a human hand. Human thumb plays a major role in the lives of most of the activities of our day. It helps us to perform various types of tasks. If it is able to manipulate in any way that can touch all four digits of the hand.

Depending on the severity of the patients, rehabilitation process may be carried out frequently or done a scheduled. It required large amount of resources and time for both the patients and physiotherapist.

Exoskeleton is a method that can be placed around a part of the human body to move without mechanical help or hinder the natural movement. The thumb exoskeleton is a device to help patients during therapy and rehabilitation process. The thumb exoskeleton mechanisms are combined carpometacarpal (CMC) abduction-adduction and CMC flexion-extension. The main focus of this paper is to present the mechanical design, implementation, preliminary evaluation and proof of concept of a portable thumb exoskeleton to assist thumb opposition movements and also design of a thumb exoskeleton rehabilitation device. The suitable control strategy for thumb exoskeleton for hand rehabilitation was also presented in this paper.

2. Thumb Movement

Thumb motion and the capability to achieve thumb-finger opposition is the main evolutionary feature of the human like a grasping and manipulating objects with one hand to become possible. The human thumb can be divided into three main bones; metacarpal, proximal phalanx and distal phalanx and three joints; carpometacarpal joint (CMC) (as thumb opposition motion and located at the base of the palm), metatarsophalangeal joint (MCP) and interphalangeal joint (IP) (flexion and extension motion) [1-6].

The interphalangeal joint (IP) mainly responsible for flexion and extension motion only and represented by a hinge joint. The metatarsophalangeal joint (MCP) known as universal joint because it is comprised of a biconvex surface on the metacarpal head and slightly concave surface of the proximal phalanx. This ball and socket configuration allow relative free motion in all planes. [7,8,9]. The configuration of the thumb posture was 50° for CMC extension, 20° for CMC abduction, 20° for MCP flexion, 10° for MCP Abduction and 30° for IP flexion [10,11].

The rehabilitation device required the motion in abduction-adduction of the CMC joints and in the flexion-extension of the CMC, MCP and IP joints. Besides, the motion assistance for the thumb opposition also very importance and strongly required in rehabilitation process.

The human thumb is generally composed as a five degree of freedom (DOF) in flexion-extension of CMC joint, abduction- adduction of the CMC joint, abduction-adduction followed by flexion-extension of the MCP joint, and flexion-extension of the IP joints [10,11]. Flexion is the motion where the thumb joint was bending and make the angle of the thumb slightly decrease, moving the bone below the thumb towards the hand and slightly forward.

Copyright © 2018 Authors. This is an open access article distributed under the Creative Commons Attribution License, which permits unrestricted use, distribution, and reproduction in any medium, provided the original work is properly cited.

Straightening the joint, increase the angle of the thumb and moving the bone away from the hand, is called extension. Adduction is a motion, which pulls the thumb towards the mid-line of the body (index-finger) while the abduction is the motion which pulls the thumb away from the index finger.

3. Design of Thumb Exoskeleton

A model design of thumb exoskeleton was proposed as shown in Fig. 1. It consists of linear actuator for CMC abduction-addiction, hand fixation plate, passive hinge joint for CMC flexion-extension, lateral wing, hand size adjustment and thumb fixation. These component were divided into mechanical- and controller- design.

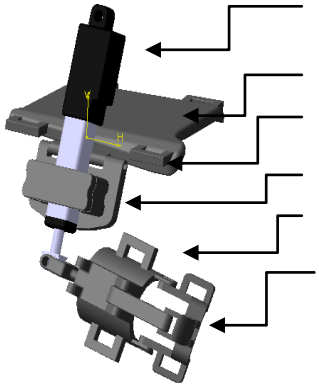

Fig. 1: CAD Design of Thumb Exoskeleton

The exoskeleton system is mounted to the hand using hand fixation plate and passive hinge joint. The exoskeleton is designed to support motion of the thumb throughout the range of motion. The design consists of a lateral wing that is attached to a hand fixation plate fixed to the dorsal side of the hand (Fig. 2). The lateral wing can rotate at metacarpal bone (MCP joint) to control Carpometacarpal (CMC) flexion–extension motion.

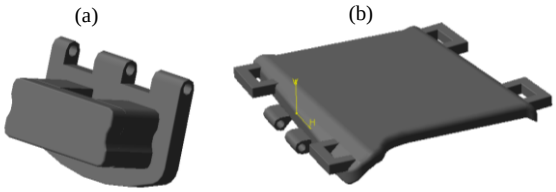

Fig. 2: (a) lateral wing and (b) hand fixation plate

Linear actuator (Fig. 3) is mounted on the lateral wing to control CMC abduction–adduction. The linear is oriented so that its output is aligned with the thumb MCP joint. The output connects to a thumb fixation system.

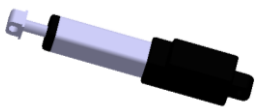

Fig. 3: Linear actuator

Thumb fixation system is attached through passive hinge joint (Fig. 4). The mechanism designs based on the biomechanical constrain of the thumb and follow natural thumb movement.

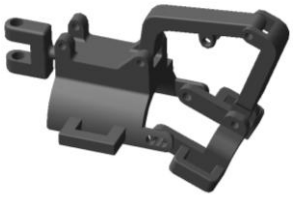

Fig. 4: Passive hinge joint and thumb fixation

Finite element simulation was performed on the exoskeleton design. The analysis on thumb fixation parti s shown in Fig. 5 based on requirement in Table 1.

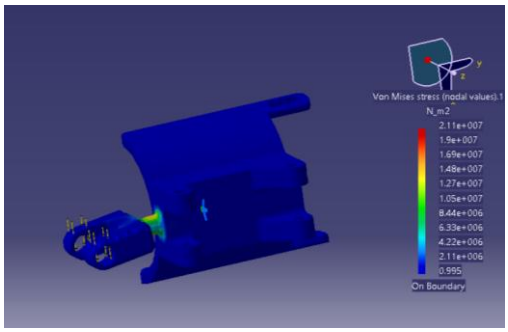

Fig. 5: Specification on Stress Analysis of Mechanical

Table 1: Requirement for a Thumb Exoskeleton

	Range
Opposition motion (CMC Flexion–extension: FE and Abduction–adduction: ABAD)	In ADL: FE: 13 – 22°, ABAD: 13.20° Max. value: FE: 53°, ABAD: 42°
Force at tip of the thumb	In ADL: 3 – 9N
Torques at CMC joint	FE: 0.3 Nm, ABAD: 0.3 Nm
Weight	Less than 150g
Palm	Free palm is to allow interaction with the real objects

The material used for passive hinge joint is acrylonitrile butadiene styrene (ABS). Fig. 5 shows that the stress at the connection was below maximum value, which indicate the material is able to support the actuated force from the linear actuator. Finite element simulation on Fig. 6 shows the maximum displacement is 0.357 mm.

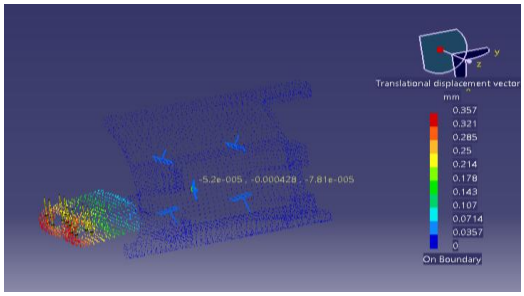

Fig. 6: Specification on Displacement Analysis of Mechanical

4. Controller Design

Components used in this exoskeleton was Firgelli linear actuator (Firgelli L12–50–210–6–R, Firgelli Technologied Inc. Canada), potentiometer, and push button switch which are connected to the Arduino UNO. The stroke of the linear actuator was controlled by changing the angle while the speed was controlled by changing PWM. The linear actuator (Fig. 7) is designed to move push or pull load along its full stroke length and have internal limit switch that will turn off the motor power when it reaches the end of its stroke. The gearing of the actuator will determine travel speed and the load or force the actuator is working against at a given point in

time when the lower gear ratios, it has higher speed but less force. Higher gear ratios have higher force but slower speed. It has range of 10 mm, 30 mm, 50 mm, and 100 mm of stroke. The maximum force can reach until 45 N and the range speed of the actuator is 5-23 mm/s. The Arduino UNO is chosen as microcontroller for this project.



Fig. 7: Firgelli L12 Series

5. Device Setup

The thumb exoskeleton was mounted on hand and tightened with the straps cross the palm of the hand. The palm and finger were ensured obstruction free and hand can freely interact with objects. Fig. 8 shows the CMC abduction-adduction motion. To control the motion CMC abduction-adduction on the exoskeleton the linear actuator was used and mounted on lateral wing. The linear actuator was oriented so that its output was aligned with thumb MCP joint. When the linear actuator fully retracts, it will conduct the CMC joint into abduction position. When the linear actuator extends, it will conduct the CMC joint into adduction position.

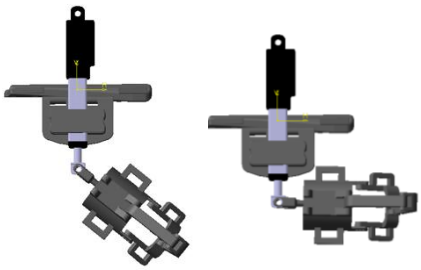

(a) (b)

Fig. 8: Carpometacarpal (CMC) (a) abduction and (b) adduction of thumb

Fig. 9 indicates the lateral wing can rotate around the axis of MCP bone of the index finger allowing for passive CMC flexion-extension. The lateral wing will move in bidirectional movement; flexion-extension. The thumb fixation consists of four-bar linkage allowing passive IP flexion-extension. The addition of the passive IP flexion-extension allows users to better position the tip of the thumb for more comfortable grasping. In order to adapt the thumb exoskeleton to hands of different sizes, the two links attached to the thumb phalanges can be shifted according to the thumb dimensions. The curve shape of hand fixation plate can easily be adapted to the shape of the hand of users. Fig. 10 shows the 3D printed mechanical parts for thumb exoskeleton. The bolts and nuts needed to joint all the parts of the exoskeleton.

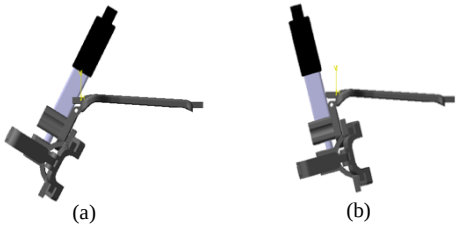

(a) (b)

Fig. 9: Carpometacarpal (CMC) (a) extension and (b) flexion of thumb



Fig. 10: 3D Printed Parts

Four straps were used to adjust the tightness of hand fixation plate and thumb fixation (Fig. 11). The hand fixation plate is mounted on the top of the hand and it tightened with Velcro bands. The thumb will be placed in the thumb fixation and the Velcro bands will be adjusted based on the user comfort. The thumb will move based on the linear actuator motion and it controls the CMC abduction–adduction and CMC flexion–extension to move thumb MCP phalange along an arc.



Fig. 11: Thumb Exoskeleton

The electronic parts on this project consists two major part which is micro controller (Arduino UNO) and linear servo (linear actuator) (Fig. 12). To control the device, the controller box has been made for easy use. The micro controller (Arduino Uno) placed inside the controller box.

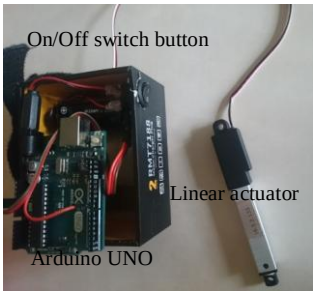

Fig. 12: Electronic components of Thumb Exoskeleton

By wearing the thumb exoskeleton, the healthy subject was evaluated based on the range of thumb motion. The linear actuator will move along its full stroke when push on/off switch button and the result from thumb joint angle will recorded. The lateral wing used as measurement corresponding to CMC flexion-extension motion and it range between 0º - 40º, where 0º represent rest position. For abduction-adduction, the default normal value (adduction) is 20 º. While the maximum angle (abduction) between the first and second metacarpal is 50 º.

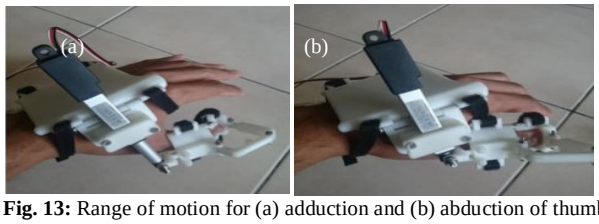

Fig. 13: Range of motion for (a) adduction and (b) abduction of thumb

When the thumb at 20º position it represents the maximum adduction position. While when the linear actuator reaches the maximum stroke length it will conduct the thumb to the abduction position.

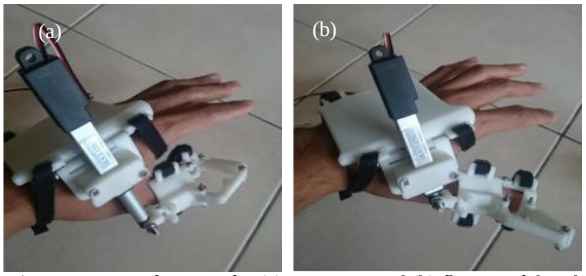

Fig. 14: Range of motion for (a) extension and (b) flexion of thumb

The measurement for measure range in flexion-extension is from 0° to 40°. Where 0° represent the maximum flexion position. Based on this prototype, the range of motion for extension-flexion is not fully covered the motion in real thumb extension-flexion, but it still acceptable for the first stage prototype in rehabilitation process.

The result of this project is based on the linear actuator that being used to actuate the thumb exoskeleton. The result is to monitor the relationship between linear actuator stroke and thumb angle, abduction-adduction motion.

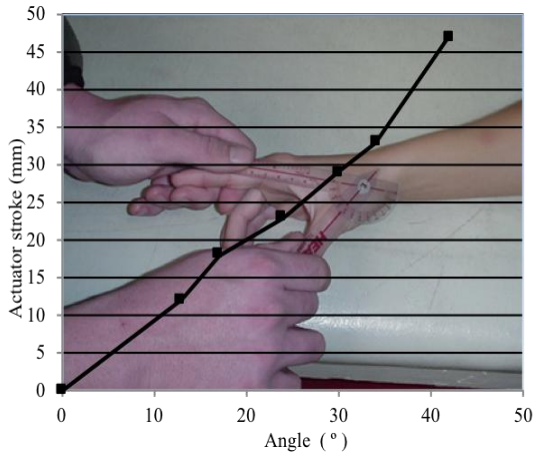

Fig. 15: Graph of Actuator Stroke Vs Angle of the Thumb

Fig. 15 shows the actuator stroke length vs degree of the thumb in abduction adduction motion. The degree of the thumb is controlled by the linear actuator; the graph shows that the range of the degree is from 0° to 45°. When the linear actuator actuates the thumb, the angle slightly increases until the linear actuator reaches its maximum stroke at 47 mm and the thumb angle is 42°. Degree of the thumb is directly proportional to the linear actuator stroke. Based on table 3.3, the maximum angle for the thumb still in abduction-adduction motion requirement, which is from 0° to 42°.

6. Conclusion

A suitable control strategy has been developed to control the rehabilitation process. This proof of concept could help the patients undergo the rehabilitation process much easier. With this system, it will lessen the burden for the patients from keep going to hospital for the treatment and also can reduce the cost for the therapy. Implementation and the system performance of exoskeleton design has been tested by validate the performance against the natural motion of the thumb.

Acknowledgement

The authors would like to thank Universiti Teknologi MARA (UiTM) for financial support [Project Grant No: 600-IRMI/PERDANA 5/3 MITRA (003/2018))-2].

References

[1] Andreas Wege and Gunter Hommel, "Development and Control of a Hand Exoskeleton for Rehabilitation of Hand Injuries," Real-Time Systems and Robotics Technische Universitat Berlin, Berlin, Germany, 2006

[2] Andreas Wage, Konstantin Kondak and Gunter Hmmel, "Mechanical Design and Motion Control of a Hand Exoskeleton for Rehabilitation". Proc. of IEEE Int. Conf. Rehabilitation Robotic, 2005.

[3] Christopher L. Jones, Furui Wang, Robert Morrison, Nilanjan Sarkar and Derekg G. Kamper, "Design and Development of the Cable Actuated Finger Exoskeleton for Hand Rehabilitation Following Stroke". IEEE/ASME Transaction on Mechatronics, 2012.

[4] H. Kawasaki, S. Ito, Y. Ishigure, Y. Nishimoto, T. Aoki, T. Mouri, H. Sakaeda and M. Abe, "Development of a Hand Motion Assist Robot for Rehabilitation Therapy by Patient Self- Motion Control". Proc. 10th Int. Conf. Rehabilitation Robotic, 2007.

[5] Ju Wang, Jiting Li, Yulu Zhang, Shuang Wang, "Design of an Exoskeleton for Index Finger Rehabilitation". 31st Annual International Conference of the IEEE EMBS, 2009.

[6] Jumpei Arata, Keiichi Ohmoto, Roger Gassert, Oliver Lambercy, Hideo Fujimoto and Iku Wada, "A new hand exoskeleton device for rehabilitation using a three-layered sliding spring mechanism." 2013 IEEE International Conference on Robotic and Automation (ICRA), 2013.

[7] Marco Cempini, Mario Cortese, and Nicola Vitiello, "A Powered Finger–Thumb Wearable Hand Exoskeleton with Self-Aligning Joint Axes," IEEE/ASME Transactions on Mechatronics, 2015.

[8] Olivier Lambercy, David Schroder, Sven Zwicker and Roger Gassert, "Design of a thumb exoskeleton for hand rehabilitation," Proc. International Convention on Rehabilitation Engineering and Assistive Technology, 2013.

[9] Vikash Gupta, Thesis, "Kinematic Analysis of a Thumb-Exoskeleton System for Post Stroke Rehabilitation," Faculty of the Graduate School of Vanderbilt, 2010.

[10] Marcello Mulas, Michele Folgheraiter and Giuseppina Gini, "An EMG-controlled Exoskeleton for Hand Rehabilitation," 9th International Conference on Rehabilitation Robotics, 2005.

[11] Furui Wang, Milind Shastri, Christopher L. Jones, Vikash Gupta, Christian Osswald, Xuan Kang, Derek G. Kamper and Nianjan Sarkar," Design and Control of an Actuated Thumb Exoskeleton for Hand Rehabilitation Following Stroke," IEEE International Conference on Robotics and Automation, 2011.