International Journal of Engineering & Technology, 7 (4.26) (2018) 78-82

International Journal of Engineering & Technology

Website: www.sciencepubco.com/index.php/IJET

Research paper



Design and Development Approach of Smart Glove for Post Stroke Rehabilitation

Nurhazlinda Fariha Mohd Nawi[1], Audrey Huong Kah Ching[1], Nabilah Ibrahim[1], Wan Nur Hafsha Wan Kairuddin[1], Nur Anida Jumadi[1], Raja Mohd Aizat Raja Izaham[2], Gan Hong-Seng[3], Wan Mahani Hafizah Wan Mahmud[1]*

[1]Faculty of Electrical and Electronic Engineering, Universiti Tun Hussein Onn Malaysia
[2]Kolej Kemahiran Tinggi MARA Ledang
[3]Universiti Kuala Lumpur, British Malaysian Institute
**Corresponding author E-mail: wanmahani@uthm.edu.my*

Abstract

Stroke accounts for high rates of mortality and disability. It levies great economic burden on the affected subjects, their family and the society at large. Motor impairments after stroke mainly manifest themselves as hemiplegia or hemiparesis in the upper and lower limbs. Motor recovery is highly variable but can be enhanced through motor rehabilitation with sufficient movement repetition and intensity. Some previous studies regarding home-based rehabilitation process have shown improvement in promoting human movement recovery. However, the existing rehabilitation devices are expensive and need to be supervised by physical therapist, which are complicated to be use at home. Cost effective assistive devices that can augment therapy by increasing movement repetition both at home and in the clinic may facilitate recovery. This current work aims to develop a device that can enhance motor recovery by providing feedback to both the therapist and the patient on the number of hand movements (wrist and finger extensions) performed during therapy. Further work will reveal whether this feedback can enhance recovery of hand function in neurologically impaired patients. In conclusion, this project may pave a new way in the development of new arm rehabilitation monitoring devices which can benefit human lives.

Keywords: *stroke; rehabilitation; flex sensors; smart glove*

1. Introduction

Stroke or cerebrovascular ailment is a noteworthy worldwide medical issue, adding to real grimness and mortality for both created and creating nations. There was a normal of two outpatient center visits for each patient within three months. From this reality infers that there is substantial quantities of stroke patients which luckily recouped from this malady may experience the ill effects of post-stroke manifestations. Outpatient restoration programs are being considered as a decent other option to the more costly healing center based projects yet at the same time, the expenses are high and frequently outside what therapeutic protection will cover. Generally, it included 10 and 15 sessions for minor and real stroke separately more than a half. The cost of treating an intense ischemic stroke from admission to the out-tolerant follow-up at a showing healing facility was considered [1].

While the particular type of treatment that any individual patient gets is exceptionally factor, both creature and human examinations have demonstrated that there are enter factors required with the end goal for restoration to be compelling. These incorporate redundancy, force, test, and inspiration [2]. In spite of the significance of these components, in numerous recovery centers, they are once in a while considered bringing about problematic treatment [2]. Inventive locally situated treatments as another option to standard physiotherapy have been contemplated. Be that as it may, their possibility and appropriateness to the bigger influenced populace stay obscure.

Undoubtedly, there is an extraordinary need to assess the cost of stroke not exclusively to the human services area which includes intense affirmation, intricacies and administration, repetitive confirmations and long-haul development yet in addition to the general public on the loose. With respect to this extent, it concentrated more on non-visual following framework where the patient will be connected to movement sensors keeping in mind the end goal to separate development data. As a rule, the sensors can be an inertial sensor, mechanical sensors, drive touchy sensors, attractively based sensors, resistor based sensors or microwave-based sensors.

It was portrayed that a portion of these sensors can be little and lightweight, for instance, drive force resistive sensors (FSRs), which can recognize even a little development, for example, singular muscle action [3]. They showed the utilization of FSRs to distinguish the constrictions of arm muscles and contrasted the removed information and information gathered from a built up EMG discovery device. The outcomes demonstrated that FSRs can be utilized to screen singular muscles. Different sensors which are broadly executed in concentrate human movement scientists are the adaptable sensor or flex sensor. The detecting implies appended to the substrate and connectable into an electric circuit. In 1999, flex sensor utilized alongside nitinol wires (normally known as muscle wire or Flexinol), connected on a straw as another outline contrasting option to engine driven manufactured appendages, refered as "Strawbotic" [4]. This choice infers structures that are moderately little, shoddy, light, constant, versatile, accessible and effectively controlled. The muscle wire goes about as actuators, where it will contract to a greatest of 8% of its length when

Copyright © 2018 Authors. This is an open access article distributed under the Creative Commons Attribution License, which permits unrestricted use, distribution, and reproduction in any medium, provided the original work is properly cited.

warmed with an electrical current flag gave by an outside controllable source.

While flex sensor is being utilized for detecting the situation of the appendage, where the sensor's protection relies upon the level of twisting. The more it twists, the more prominent the protection of the sensor. Utilizing flex sensors contained in Lycra/Nylon sleeves to gather ongoing flexion information of finger flexion over a broadened timeframe [5]. The individual sensor sleeves are safely connected to the back of each finger. They exhibited that information can be gathered serenely finished an expanded timeframe while people perform day by day exercises from the clinical site utilizes flex sensor as a piece of the detecting framework for fake arm's control investigate [6]. There were also other past studies related to the topic available for further readings and understanding [7 - 10].

The core purpose of this study is to develop a system/device that can provide feedback to both patients and therapists to enhance movement repetition and ultimately promote motor recovery in the wrist and fingers. It also will allow for a cheap alternative to some of the expensive specialized equipment that would not be available to patients who want to continue their rehabilitation program within their own residence.

2. Material and Methods

This part elaborated on the general concept of the system as well as the proposed design of the system.

2.1. Concept of Project

Figure 1 demonstrates the block diagram of the systems' general idea. The primary capacity of the system is the ability to peruse information data gathered from wearable sensors associated with the microchip persistently. The utilization of the chip which is Arduino Uno intends to process the data and exchange it to the (PC) or can likewise be put away inside a Secure Digital (SD) card. The put-away information will then can be prepared and additionally break down. The developed system comprised of three major units: sensory unit, main unit, and data logging unit. Detail clarification about every unit will be portrayed below;

2.1.1. Sensory Unit

In this study, the sensor used to identify the development investigation is adaptable twist sensor or flex sensor, a sort of resistor which really made out of little fixes of carbon that can change protection esteem when bowing from arched to curved shapes. Flex sensor is a perfect input device for controlling appendage like instruments because of its simplicity of situating when joined to finger, wrist or elbow to track developments. Once the flex sensor bent, the yield will give a difference in diminishing in voltage esteem.

2.1.2. Main Unit

Fundamentally, the outline for the primary unit will comprise of an Arduino Uno microcontroller, a 16x2 LCD screen, and a tactile push button. The LCD is controlled by 5V control supply from the Arduino. Pushbutton empowers the Arduino to begin or quit handling the information got from the sensors. The principal elements of the fundamental unit are to get charge signals from the PC and make an interpretation of it into control signals, and also to process the crude information gathered from the sensors from the sensor unit and sending them back to the PC. Insights in regards to sensor circuit combination with the fundamental unit will be discussed later while the detail of every part is examined in equipment improvement.

2.1.3. Data Logging Unit

A run of the mill framework which comprises of logging unit, once it is exchanged on utilizes its inside clock to advise the chip to peruse the incentive from every sensor thusly and afterward compose the information esteem gathered into memory. There is additional information logging through serial correspondence framework that uses a PC that goes about as an ongoing information logging framework. With respect to this extent, information logging was done through Secure Digital (SD) memory card.

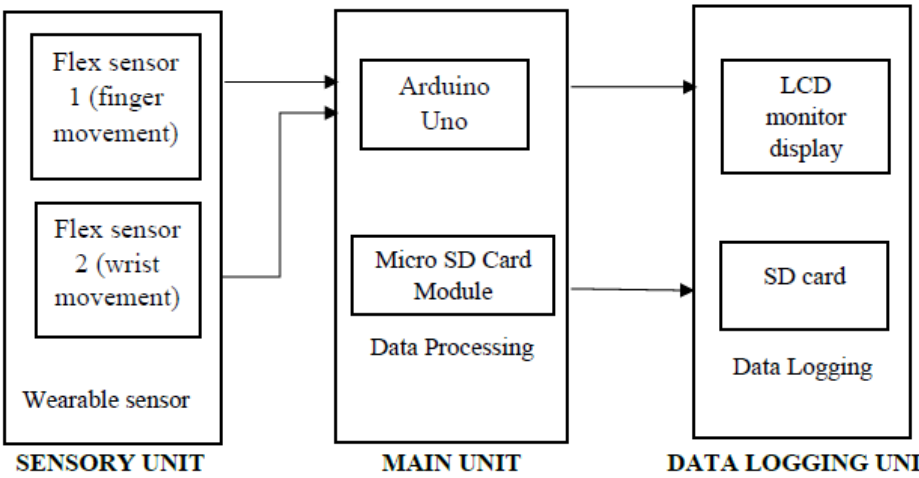

Figure 1: Block diagram of post stroke rehabilitation system

2.2. Design of Proposed System

The information procurement module involves two adaptable sensors mounted on the Smart Glove inside the wrist and forefinger separately. The protection of the sensors changes as per the sum to which they are extended while performing wrist and finger expansions. The adjustment in protection is changed over into quantifiable voltages utilizing the information transformation module. This module involves voltage divider circuits having resistors and a steady power supply. The deliberate voltages are the contributions to the control unit, Arduino Uno microcontroller that takes the simple voltages and proselytes them to computerized esteems utilizing the inbuilt simple to advanced converters. The advanced voltage esteems are then encouraged into a program that produced the data to identify the wrist and finger augmentations.

Figure 2 demonstrates the flow chart for the working principle of the system:

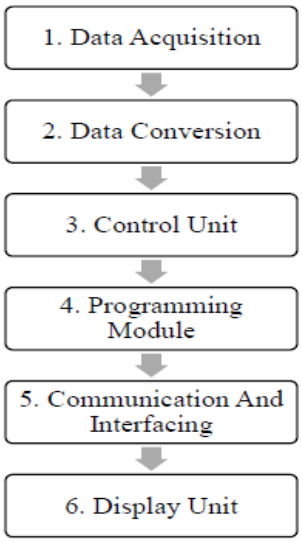

Figure 2: Flow chart of the working principle of the system

2.2.1 Data Acquisition Module

Flex sensors are stitched on the glove. There are two sensors implemented in the design, one for detecting finger flexion, the other for detecting wrist flexion. For detecting finger flexion, the sensor is mounted on the index finger and for wrist flexion, it is mounted on the wrist. The flex sensors have very fragile connector pins. These pins are hence soldered to a thick copper conduction wire. The connector pins also exhibit a tendency to detach from the resistive strip during excessive bending. To prevent this, the junction of the connector pins and strip resistor is wrapped in a sponge cushion and held in place using insulation tapes. Figure 3 shows resistive flex sensors mounted on the glove.



Figure 3: Resistive flex sensor ounted on the glove

2.2.2. Data Conversion Module

The adjustment in the protection of the flex sensors is changed over to quantifiable voltages utilizing voltage divider circuits. Voltage divider circuits separate the supply voltage into littler voltages over the protections associated with the supply. The voltages are separated into littler parts relying upon the estimations of the protection. The voltage divider circuit in the outline actualizes a 47 KΩ voltage divider circuit protection in arrangement with the resistive sensor. At the point when the sensor is expanded, the protection diminishes which result in bring down voltage drops over the sensor. The expansion is distinguished by this diminishment in protection after some time. The power supply for the circuit is given by the 5V DC stick of the Arduino Uno.

2.2.3. Control Unit

Arduino Uno microcontroller is the control unit for the device. It comes with 14 digital input/output pins of which 6 can be used as PWM outputs, 6 analog inputs, a 16MHz quartz crystal, a USB connection, a power jack, an ICSP header and a reset button. However, Smart Glove uses only the analog pins, digital output pins, ground pins and supply pins of Arduino Uno microcontroller. The Arduino Uno has a number of facilities for communicating with a computer, another Arduino, or other microcontrollers. Perf board attached on the glove which the circuitry for data acquisition and conversion are constructed.

2.2.4. Programming Module

The microcontroller is programmed using Arduino 1.6.4 IDE. The resistance of the flex sensors is converted to voltages. The analog voltages are then converted to digital values ranging from 0 to 1023. The program monitors these digital values for both the sensors every 250ms. Initiation of an extension can be detected by the continuous decrease in the digital voltage values and a count is maintained for both wrist and finger extensions. The program starts only when the sliding switch is on, which can be recognized by the high state of digital pin 2. From then on, it implements the logic to detect the different types of flexions in loops until the slide switch is off. This is characterized by the low state of digital pin 2.

2.2.5. Communication and Interfacing

Arduino has built-in support for UART which enable serial communication The Arduino can transmit and receive data to the PC over USB Cable. The Arduino IDE has built-in Serial Monitor window, which displays the data sent from Arduino to PC the same way data/command sent from Serial Monitor to Arduino. The serial communication enables control of electronic devices connected to Arduino board from PC.

2.2.6. Display Unit

Whenever an extension is performed, it will be displayed on the laptop screen using the Arduino software. This software has an inbuilt serial monitor that displays the outputs of the microcontroller program.

3. Result and Analysis

3.1. Prototype of the Smart Glove

Figure 4(a) shows the flex sensors that were inserted into pockets stitched on the glove. There are 2 sensors implemented in the design, one for detecting finger flexion, the other for detecting wrist flexion. For detecting finger flexion, the sensor is mounted on the index finger and for wrist flexion, it is mounted on the wrist. Since the flex sensors have very fragile connector pins, these pins are hence soldered to a thick copper conduction wire. Circuit components are required to convert the resistance values generated by the sensor to digital voltage values that can be interpreted by a software program. These circuit elements can be soldered onto the perf board. The perf board points are electrically isolated from each other. So the circuit components can be soldered in any convenient pattern as shown in Figure 4(b).



(a)

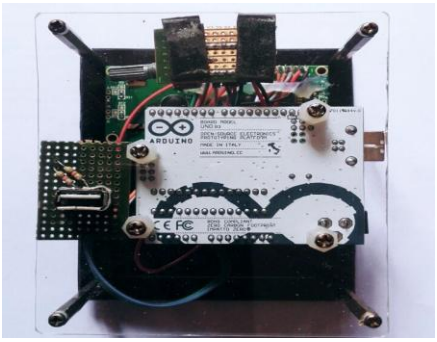

(b)

Figure 4: Prototype of the Smart Glove; (a) flex sensor attached to the glove, (b) circuit component of the system

Figure 5 shows the overall hardware setup diagram. The individual modules are joined together to implement the complete system. Integrity in the design is ensured by verifying the continuity in connection between the modules. The data acquisition and conversion blocks are wired to the control unit and the control unit communicates with the display module via the SD card module communication protocol. The system is functional if it works only during the ON state of pushbutton and displays the count of wrist and finger extensions on the laptop screen as and when they are detected. When the switch is off, a session summary should be generated which can be exported as a text file.

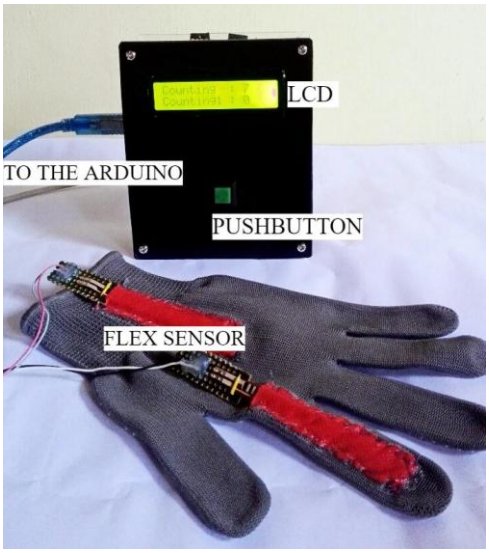

Figure 5: The overall hardware setup

3.2. Result Testing

During the testing phase, the performance of the system is evaluated. Before testing the Smart Glove on stroke patients, it was initially tested for its effectiveness while healthy subject performing finger and wrist extensions. The tasks were performed while wearing the glove and were carefully chosen to incorporate a large number of finger and wrist extensions. Each session implemented the two tasks and a total of 3 sessions were recorded for averaging and comparing results. Time given for subject to complete each task was errand 1 minute separately.

Several changes were made to the glove during testing. While this first prototype was functionally effective, the glove requires extensive modifications before it can be extensively tested in the clinic and at home. Initially when the glove was tested for its functionality, there was a huge difference in the number of wrist and finger extensions performed across the sessions for the same set of tasks. This could be because of the different ways by which a task can be completed. While performing the task in the session, much attention is not given to the type of movements incorporated in the task.

Stroke rehabilitation therapy sessions are usually evaluated by the number of times a task is completed within times given. Smart Glove can give critical information about the type of movements incorporated to complete an activity.

As testing results, the outcome performed by healthy subject 1 is 65 finger flexions and 9 wrist flexions inside two minute term. Each errand was set 1 minute separately. The outcome acquired demonstrates the most noteworthy number of finger flexions done by the subject amid the testing procedure. For healthy subject 2, there are add up to 46 finger flexions and 12 wrist flexions done out and out. The diagram result indicates the estimation of finger flexions are decreased in Subject 2 however increments in the number of wrist flexions contrasted with Subject 1. The number of wrist flexions done was the most noteworthy among three subjects. For healthy subject 3, Smart Glove is worked at 22 finger flexions and 5 wrist flexions inside 2 minutes length as shown in Figure 4.21. Subject 3 experienced issues in wearing the glove. The subject was not ready to stretch out the fingers legitimately to slide them into the particular finger openings of the glove. In this way, the outcome was the slightest among those three subjects. All outcomes obtained were converted into the table and chart as appeared in Table 1 and Figure 6 respectively.

Table 1: Result testing for 3 subjects

	SUBJECT		
FLEXION TYPE	SUBJECT 1	SUBJECT 2	SUBJECT 3
FINGER	65	46	22
WRIST	9	12	5

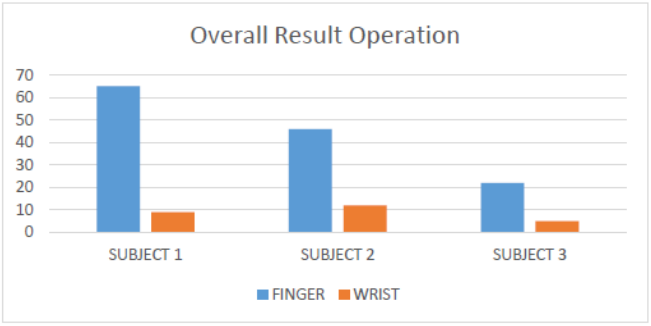

Figure 6: Result testing for 3 subjects

3.3. Discussion

Smart Glove was successfully fabricated and the total cost of fabrication was USD54 making it potentially affordable. Proper communication was established between the data acquisition, data conversion, data processing and display modules. Resistive sensors mounted on the Smart glove were able to detect finger and wrist extensions performed by both control subjects and stroke patients while performing therapy. The sensitivities for detecting wrist and finger extensions could be adjusted independently depending on the amounts of spasticity manifested in the wrist and fingers. Successful interfacing was established between the external hardware and control unit. Microcontroller was programmed to work according to an algorithm that checked the resistance values of the sensors every 100ms. An extension was detected by the continuous decrease in the resistance of a sensor over a timeframe. The sensitivity values could be adjusted between 0 and 100 within the program. However, the sensitivity level was only set to 90 in this research. The glove detected extensions only when the pushbutton was ON. The serial monitor in the Arduino IDE software was able to populate the count of wrist and finger extensions whenever they were performed by the subject during the

therapy sessions. At the end of the session, a summary was generated having the details of the total number of extensions performed during therapy session.

The data in the serial monitor was also exported as datalog.txt in SD memory card for future references especially by the physical therapist. The glove was able to detect the different types of extensions in stroke patients with various levels of impairments. This was achieved by carefully adjusting the sensitivity levels for wrist and finger extensions based on the amount of impairment. By consistently making changes to the design over successive sessions based on the feedback collected, the subjects were able to make wise use of the glove in their sessions. The first prototype of Smart Glove was functionally effective. The capabilities of monitoring (Microsoft visual basic) and data logging function (SD card data storage) translating to the following advantages:

1. The proposed system is easy to be attached to arm with minimal external assistance.
2. Smart Glove can detect wrist and proximal finger extension in patients with varying degrees of impairment.
3. It has data logging system which can store data into SD memory card for certain period of time that can be used by physical therapist for further analysis.
4. Potential to be a low-priced and portable assistive device. Thus, stroke patients can utilize this system at their home with minimal assistance from doctors and clinicians.

This project provides various opportunities for future developments mainly related to improving the device sensing approach and practical usage of this rehabilitation device:

1. For future work, further enhancing the capability of sensory unit is proposed by replacing the current sensor with 4.5 inches flex sensor. By using 4.5 inches flex sensor, it may be able to improve the rehabilitation process since it can give more accurate reading and analysis.
2. Researching on using an Arduino Shield such as Ethernet shields and wireless shields can be interesting to send the data online to doctors.

4. Conclusion

In observation, the operation of Smart Glove function very well as been programmed in Arduino. The device already perform operation based on the sensitivity level programmed in Arduino microcontroller. Data from each session is successfully transferred to SD card for future references by therapists. The results show that the Smart Glove can detect wrist and proximal finger extension in patients with varying degrees of impairment. Several design flaws will need to be overcome before it can be tested in a larger population of patients both in the clinic and at home. However, the Smart Glove has the potential to be a low-priced assistive device that can enhance the motor recovery after stroke or brain injury.

Acknowledgement

The authors would like to thank all the volunteers participating as the subjects in this study. This study was funded by grant TIER 1 H223.

References

[1] Aznida FAA, Azlin NMN & Amrizal MN (2012), The cost of treating an acute ischaemic stroke event and follow-up at a teaching in Malaysia, 12 (Suppl 1): pp6.

[2] Kleim JA & Jones TA (2008), Principles of experience dependent neural plasticity: implications for rehabilitation after brain damage. *Journal of Speech, Language, and Hearing Research*, 51(1): S225-239.

[3] Amft O (2006), Sensing Muscle Activities with Body-Worn Sensors, International Workshop on Wearable and Implantable Body Sensor Networks, IEEE Computer society.

[4] Chapman R (1999), A Motorless Artificial Limb and its Control Architecture, in *Proc. IEEE Canadian Conference on Electrical and Computer Engineering*, Show Conference Center, Edmonton, Canada; May 9-12.

[5] Simone LK (2004), A Low Cost Method to Measure Finger Flexion in Individuals with Reduced Hand and Finger Range of Motion, In *Proc. 26th Annual International Conference of the IEEE EMBS* San Francisco USA; September 1-5.

[6] Yoo JM &Yoo YM (2006), A Study on A Sensing System for Artificial Arm's Control, *SICE-ICASE International Joint Conference*, Korea; Oct. 18-21.

[7] Yap HK, Lim JH, Nasrallah F & Yeow C-H (2017), Design and Preliminary Feasibility Study of a Soft Robotic Glove for Hand Function Assistance in Stroke Survivors. *Frontiers in Neuroscience*;11:547.

[8] Polygerinos P, Wang Z, Galloway KC, Wood RJ, Walsh CJ (2015). Soft robotic glove for combined assistance and at-home rehabilitation. Rob. Auton. Syst. 73, 135–143.

[9] Haghshenas-Jaryani M, Carrigan W, Nothnagle C & Wijesundara MBJ (2016). Sensorized soft robotic glove for continuous passive motion therapy. *IEEE Int. Conf. Biomed. Robot. Biomechatronics* 815–820.

[10] Polygerinos P, Galloway KC, Savage E, Herman M, Donnell KO & Walsh CJ (2015). Soft robotic glove for hand rehabilitation and task specific training. *IEEE Int. Conf. Robot. Automat.*, 2913–2919.