*International Journal of Engineering & Technology*, 7 (4.26) (2018) 63-69

International Journal of Engineering & Technology

*Website: www.sciencepubco.com/index.php/IJET*

***Research paper***



# Development and Evaluation of a Spot Sensor Glove for the Tactile Prosthetic Hand

**Mohammed Najeh Nemah[1,2], Cheng Yee Low[1]*, Pauline Ong[1], Noor Ayuni Che Zakaria[3]**

[1]*Faculty of Mechanical and Manufacturing Engineering, University Tun Hussein Onn Malaysia, 86400 Parit Raja, Batu Pahat, Johor, Malaysia.*
[2]*Engineering Technical College-Najaf, Al-Furat Al-Awsat Technical University, 32001, Najaf, Iraq.*
[3]*Faculty of Mechanical Engineering, Universiti Teknologi MARA, 40450 Shah Alam, Selangor, Malaysia.*
**Corresponding author E-mail: cylow@uthm.edu.my*

## Abstract

A tactile glove sensory system of the haptic feedback stimulation system for the upper limb prostheses was developed in this work to enable the patients of the upper limb amputation to recover the sense of touch and slippage. The system features six of a spot piezoresistive force sensors of type Quantum tunnelling composites (QTC) with 10 mm diameter, in order to measure the contact pressure between the hand and the objects. Five sensors were distributed on each fingertip and an extra sensor was mounted on the hand's palm to cover all the critical point and increase the probability of detecting the contact pressure. The tactile glove was fabricated from the plastic glove equipping with a rigid foundation under each pressure sensor. The computer system was programmed to select the instant greatest signal from the six sensors' signals; in order to create a critical output signal that can be provided to the haptic feedback stimulator. The touch and the slippage detection experimental tests have been done to examine the functionality of the tactile sensory glove for detecting the touch, start of touch, end of touch grasp, and slippage. The testing results showed that the amputees were able to recover the sensation of the contact pressure using a spot sensor tactile glove developed in this work.

***Keywords***: *Tactile glove; Tactile prosthetic hand; upper limb prostheses; Haptic feedback stimulation system; Feeling recovering.*

## 1. Introduction

The human hand is wonderful part of our bodies. It allows different sizes of objects to be grasped and manipulated in an easy way. The human hand has a huge number of mechanoreceptors locate under the skin. The mechanoreceptors enable the human's hand to provide the brain multi useful information about the objects and the surrounding when grasping the objects or being in contact with the surfaces [1]. The modern tactile prosthetic hand still unable to handle all the functions or the tasks of the real hand [2]. In particular, tactile sensing is lacking in most upper limb prostheses devices.

Many previous articles investigated how to design and develop the tactile sensory system to help the amputees, which unfortunately lost part or all of their upper limb, to recover the feeling by wearing the haptic prosthetic hand. In general, the tactile sensory system of the haptic upper limb prostheses can be classified depending on the previous works into five classes based on the functionality and the tasks of the tactile system itself. The five classes are the pressure detection sensory system [3-13], slippage detection sensory system [1, 14-23], the surface texture detection sensory system [24-35], the material detection sensory system [36-39], and the temperature detection sensory system [40, 41]. While other articles challenged how to gather two or more of types of the tactile sensors, in order to create hybrid sensory systems which have the ability to measure multi types of information at the same operation time [42-44], for example, the gathering pressure sensors with vibration sensor in order to detect the contact pressure and the surface texture at the same time [44].

Several of the tactile sensory system have been designed by utilizing piezoresistive sensors [4, 7-9], piezoelectret sensors [16], capacitive sensors [10], and Flexible Optical Shear Sensor [11-13], in order to detect the contact pressure and the slippage in high response and acceptable accuracy. The most important two kinds of the spot force/pressure sensors usually used with the upper limb prostheses are Quantum tunnelling composites (QTC) force sensor [45, 46] and Force-sensitive resistor (FSR) force sensor [1, 3, 14, 15] because it have a specific features make it suitable for using as a tactile sensory system like the small size, lightweight, and low power consumption. While the BioTac tactile sensors [6, 27, 28, 47] and Piezoelectric perpendicular polyvinylidene difluoride (PVDF) film sensors [26, 43, 48] which commonly used to fabricate the tactile prosthetic hand have the ability to measure multi types of surrounding parameters at the same time.

It must be mentioned that, the sensors' number and the setup location of the prosthetic hand have not been fixed and determined in previous researches. Some of the previous works considered fixing one pressure sensor on one prosthetic's fingertip was enough to detect the contact pressure [4, 5, 10, 15-23], while another group of previous researchers identified fingertips as critical areas, therefore, they decided to place a pressure sensor on each fingertip [6, 49-56]. On the other hand, several works covered all the prosthetic hand with the pressure sensors as can as possible, in order to increase the probability to detect the normal forces applying on the tactile prosthetic hand at any point over the hand [1, 3, 7-9, 14].

The main aim of this study is to design a spot sensor tactile glove which has the ability to detect the contact pressure and the slippage at the same operation time. The tactile glove will be used in further work as a sensory system of the haptic upper limb prosthe-

**Copyright © 2018 Authors. This is an open access article distributed under the Creative Commons Attribution License, which permits unrestricted use, distribution, and reproduction in any medium, provided the original work is properly cited.**

ses, in order to help the amputees to recover the feeling of touch. Six QTC force\pressure sensors with 10 mm diameter were fixed at each of the five prosthetic's fingertip and an additional sensor was mounted in the palm of the prosthetic hand, in order to work together at the same operational time and increase the probability of detecting the contact pressure and the slippage. The pressure sensors fixed on the rigid foundations to prevent the skin's displacement during grasping objects.

This paper is organized as follows. The classification of the tactile sensory system, types of the pressure sensors and techniques, the sensors' number and the setup location depending on the previous works in the field of the haptic upper limb prostheses are highlighted in the introduction section. The design conception and the fabrication of the tactile glove are presented in the next two sections. Afterward, the interfacing between the pressure sensors and the computer system, in addition to the method of connecting the sensors, are illustrated using diagrams and graphics. Next, the distribution of the evaluation experimental detection tests are presented and the evaluation's results are analysed. Finally, the critical factors that affect the results are concluded and how future work might improve the current tactile system is discussed.

## 2. Design Conception of Pressure Sensory System

The haptic feedback stimulation system is classified into three main parts in order to easily help the amputees to recover the sensation of touch, grasp, and slippage. The first part is the sensory system used to collect the contact pressure data from the surrounding. The second part is the feedback stimulation system that delivers the information about the touch, grasp, and slippage to amputees. Finally, the third part is the computer system used to process the sensory system's signals and manipulate the order for the wearable haptic feedback device.

The main goal of designing the tactile pressure glove with the ability of detection the contact pressure is to prepare a suitable and functional tactile sensory system for developing a complete haptic feedback stimulation system in the future work. The developed haptic system should have the ability to detect the contact pressure with six pressure sensors and provide the information to the patient's brain by utilizing a single actuator feedback stimulation device, as presented in Figure 1. Therefore, the computer system should be programmed in an effective way in order to select the largest pressure signal among the six signals of the pressure sensors and transfer it to the single actuator feedback stimulation device, which can be fixed on the residual limbs of the amputees.

In order to develop a functional tactile prosthetic hand, the tactile sensor has to be flexible enough to coat the curving surfaces of the prosthetic hand [57]. Also, the tactile force/pressure sensor should be rigid and sensitive enough to measure the static and the dynamic forces applying on the prosthetic hand. The piezoresistive force sensor is usesd to measure the touch and the grasp force applying on the prosthetic hand. The piezoresistive force is then utilized to detect the movement of the slipping objects [43].

In general, the piezoresistive force sensor was fabricated from a semiconductor material, which has the ability to change its electrical resistance when an effective force applied directly over it.

Based on the above acquaintance, the QTC with 10 mm diameter, piezoresistive force sensor was chosen to develop a haptic feedback stimulation system because it has the ability to detect the touch, grasp, and the object slippage at the same time, in order to cover the critical points of the touch on the prosthetic hand like the palm zone and five fingertips. Therefore, five QTC sensors were fixed on each fingertip and an extra sensor was mounted on the handball to increase the chance of capturing the force affecting the hand, as shown in Figure 2.

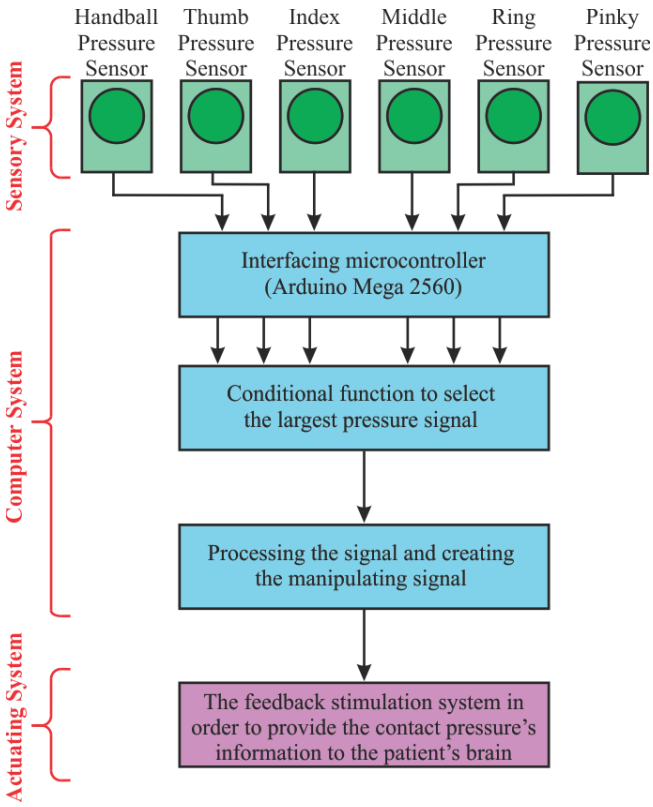


**Fig. 1:** Design conception of haptic feedback stimulation system

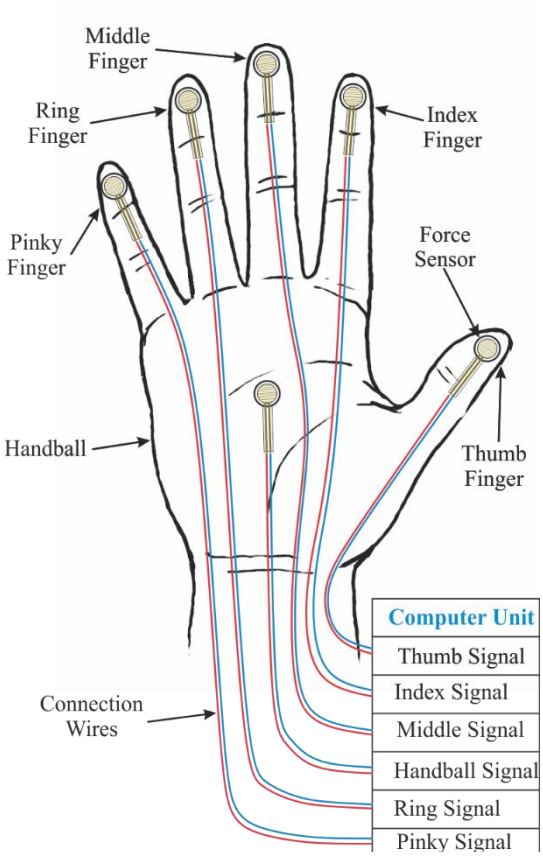


**Fig. 2:** Design conception of pressure sensory system

## 3. The Fabrication of the Tactile Pressure Glove

This study aims to develop a haptic feedback stimulation system, which has the ability to help the amputees to recover the feeling through their prosthetic hand by detecting the surrounding infor-

mation and transferring it to the patients' brain. Therefore, testing the system with the healthy human hand is the first step of this research development.

The tactile glove wear by a healthy volunteer in this work fabricated from a plastic glove, as shown in Figure 3. A rigid cover shields the fingertips and the palm of the tactile glove, in order to create a rigid foundation under the pressure sensors, similarly to the rigidity of the robotic hand. Moreover, a rigid foundation reduces the impact of the pressure sensors in the flexibility of the human's skin.

A rigid cover was designed using the Solidwork program and printed by a 3D printer of type Raise-3D-N2-Plus [58], using Acrylonitrile Butadiene Styrene (ABS) material [59]. Six QTC pressure sensors of SP200-10 series with 10 mm diameter and 0.1 N to 20N operating force range from Peratech [60] were distributed over the hand, whit five were fixed on each fingertip and one was mounted on the handball, in order to cover all the critical spots on the hand. The connection wires of the six pressure sensors were passed over the outside of the hand to protect it from the damage when holding the objects.

The design of the tactile pressure glove has advantages of: (i) the volunteer who wears the glove can move his hand and joints easily because the glove is made from the elastic material; (ii) the rigid cover of fingertips and the palm make the base of the pressure sensors stiff enough to work with high accuracy; and (iii) the design of the tactile glove is suitable for different size of hand due to its extensibility.

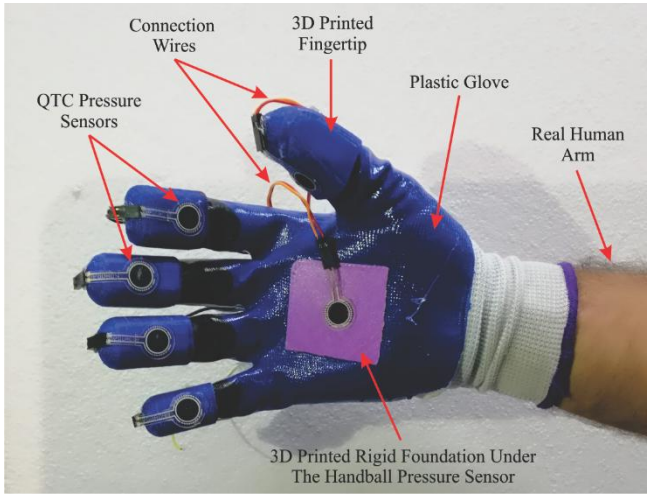


**Fig. 3:** The fabrication of the tactile pressure glove

## 4. Interfacing the Pressure Sensors with the Computer System

The interfacing computer system has a main function of connecting the tactile sensory system with the computer. Arduino Mega 2560 microcontroller was used in this study as an interfacing device. Furthermore, Matlab Simulink program 2018a updated with Simulink support package for Arduino hardware toolbox was utilized to process the signals.

The resistance of the QTC force sensor contrasts when the applying force on the sensor varies. At no load case, the resistance of the QTC sensor will be greater than 1MΩ [61]. Therefore, it is important to combine the resistor of the QTC force sensor ( $R_s$ ) with a static resistor to create a voltage divider. A voltage divider connects the QTC force sensor to Arduino Mega 2560 is shown in Figure 4. One branch of the proposed voltage divider is the QTC sensor itself, and the other branch is a fixed resistor ( $R_f$ ) with a value of 2K-Ohm and the input voltage ( $V_{In}$ ) of 5 V. Output voltage ( $V_{Out}$ ) can be expressed as:

$$V_{Out} = \frac{R_f}{R_f + R_s} V_{In} \quad (1)$$

The signal processing from the sensory system to the haptic feedback stimulation system is presented in Figures 5. Firstly, six different values of the pressure signals were designed to provide the analog signals of the tactile sensory system to the computer system through the Arduino microcontroller. The computer system was programmed to compare the six pressure sensory signals by three comparison layers, in order to choose the largest critical signal because the haptic feedback stimulation system will be designed with one actuator and work with only one signal provided from the sensory system. If the largest pressure signal is an effective signal, the computer system will command the actuator to excite the patient's residual part according to the amount of the critical signal. In other words, if the time dependent vectors $\vec{P}(t)$, $\vec{R}(t)$, $\vec{M}(t)$, $\vec{I}(t)$, $\vec{T}(t)$, and $\vec{H}(t)$ represent the pressure sensors signals of the pinky fingertip, ring fingertip, middle fingertip, index fingertip, thumb fingertip, and the handball, respectively. Then the greatest signal output from the tactile sensory system $\vec{V}_{Out}(t)$ can be calculated as:

$$\vec{V}_{Out}(t) = Max(\vec{P}(t), \vec{R}(t), \vec{M}(t), \vec{I}(t), \vec{T}(t), \vec{H}(t)) \quad (2)$$

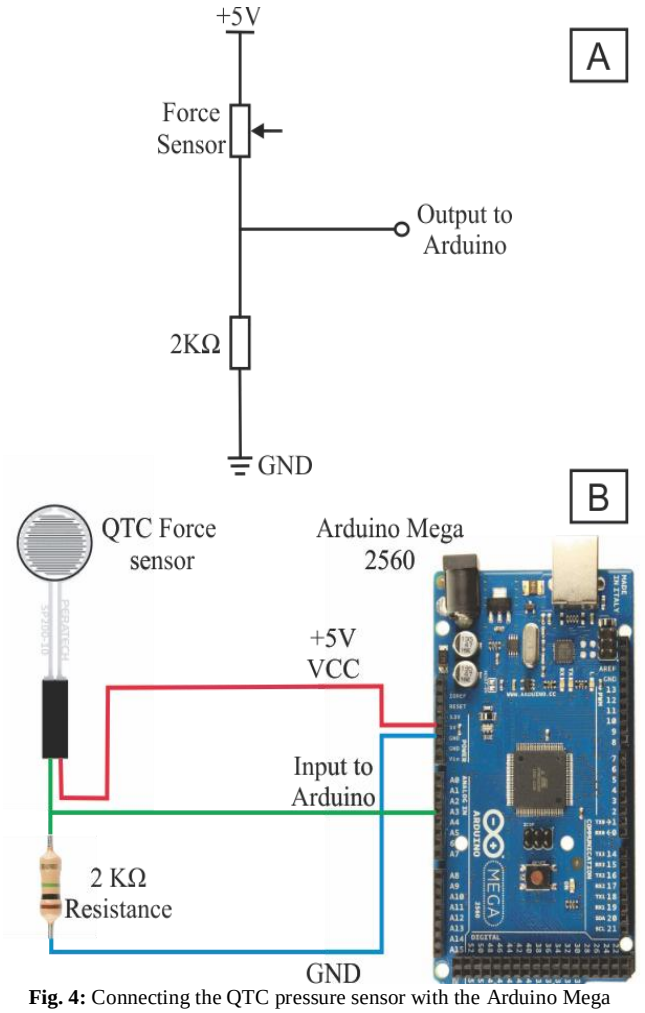


**Fig. 4:** Connecting the QTC pressure sensor with the Arduino Mega

## 5. Tactile System Functionality Tests

The touch detection and the slippage detection tests have experimentally examined, in order to prove the functionality and the effectiveness of the tactile glove to detect the contact pressure during the touch, grasp, start of touch, end of touch, and slippage.

### 5.1. Touch Detection

The touch detection test was done in order to verify if the tactile glove has the ability to detect any value of the contact force applying on it. Firstly, the tactile glove was examined by touching

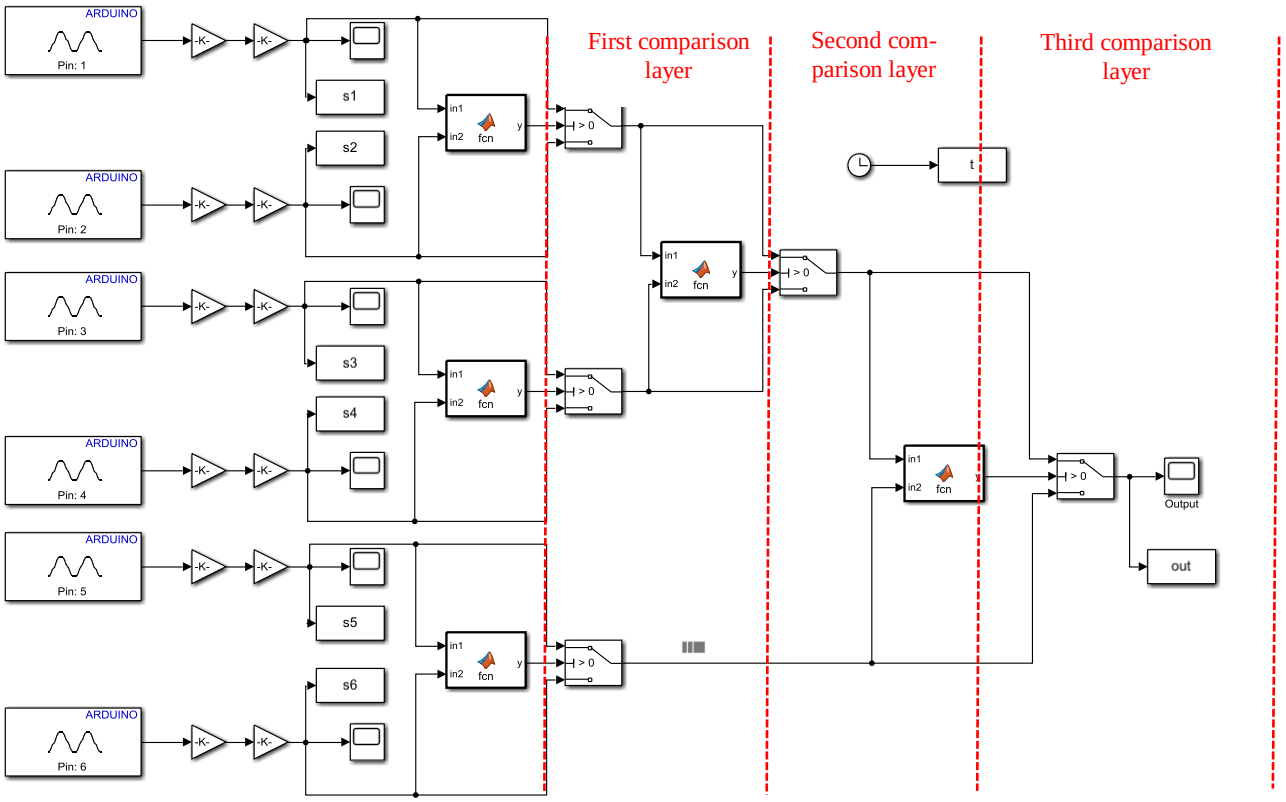


**Fig. 5:** Matlab\Simulink model of the tactile sensory glove

different types of surfaces, in order to monitor the responses and the performance of the pressure sensors during touching, the start of touching, and the end of touching the surfaces.

After that, the handshake between two volunteers was chosen to test the grasping performance of the tactile glove because many countries use this short ritual frequently in the daily life. One volunteer has to wear the tactile glove and grasp the hand of the other volunteer with a brief up and down movement, as shown in Figure 6. The evaluation test must be repeated twice in order to verify whether there is a matching between the two cases or not.

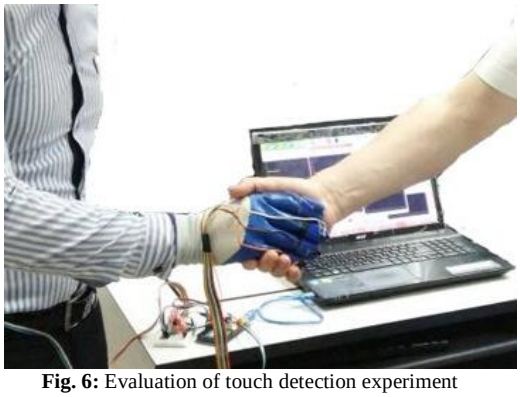

**Fig. 6:** Evaluation of touch detection experiment

### 5.2. Slippage Detection

A cylindrical pipe of 8 cm diameter equipping with steel hook from its bottom side was used to evaluate the functionality of the tactile glove to detect the slippage, as shown in Figure 7. The hanging weight was attached to the pipe's hook in order to increase the slipping load step by step until the slipping occurs. The volunteer, who wears the tactile glove, was asked to grasp the cylindrical pipe with a suitable grasping strength just to prevent the slipping. After that, the hanging weight was increased gradually until the slipping occurs by 1 kg for each increase. It is expected that the normal behavior of the volunteer is to gradually increase the handgrip strength to overcome the increasing of the hanging weight. In addition, it is expected that the slipping could happen when the hanging load increases more than the ability of the volunteer hand.




**Fig. 7:** Evaluation of slippage detection experiment

## 6. Experiment Results and Discussion

The behaviors of the six QTC pressure sensors during hand shaking between the volunteers are shown in Figure 8. The handshake was repeated twice within 16 sec. Figures 8.A-F represent the responses of the pinky, ring, middle, index, thumb, and handball pressure sensors, respectively, while the largest instant-output signal of the tactile glove is displayed in Figure 8.G.

The results showed that all the pressure sensors respond with different signal's values, which mean, all the senses keep in touch during the handshake. In addition, the results validated the functionality of the tactile glove for detecting the contact pressure during grasping objects. On the other hand, it is clear to note that, the output signal is always the instant largest value of the six pressure signals. For example, the output signal corresponds to the handball sensor's signal during the period from 6-9.5 sec, the pinky sensor's signal during the period from 9.5-10.1 sec, the ring sensor's signal during the period from 10.1-10.6 sec, the middle sensor's signal during the period from 10.6-13.8 sec, and the index sensor's signal during the period from 13.8-16 sec.

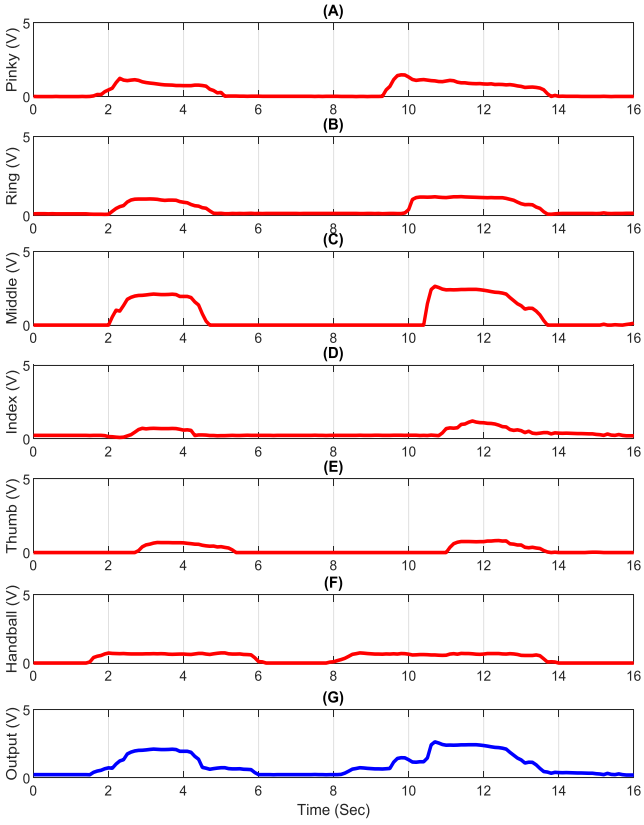


Fig. 8: The responses of the pressure sensors when the volunteers shook hands

The responses of the six QTC pressure sensors when the hanging weight increases gradually and the time of the slipping object are presented in Figure 9. The total experimental time is 35 sec, during it the hanging weight increases by 1 kg for each 5 sec until it reaches to 5 kg as the maximum amount of load within the capability of the volunteer while wearing the tactile glove, see Figure 9.A. The values of the pressure sensors' responses approach zero in the period from 0 to 5 sec because the volunteer did not grasp the cylindrical pipe yet. It is easy to note that, the six QTC sensors showed good responses at each time when the load increased. Additionally, the responses showed that the amount of the measured signals increased with the cumulative of the hanging weight because the volunteer increases the grasping force on the object at each time when the weight increases, in order to prevent the slippage.

On the other hand, Figure 9 exhibits that, when the load increased to 6 kg at 30 sec, the analog signals of the pressure sensors decrease rapidly to zero. This behavior indicates that the object was slipped down from the hand and there is no contact force applying on the six QTC pressure sensors. The tactile glove of this work presented a normal behavior with grasping objects and slippage detection, which similar to the behavior of the tactile sensory systems that presented in the previous works [1, 15, 23].

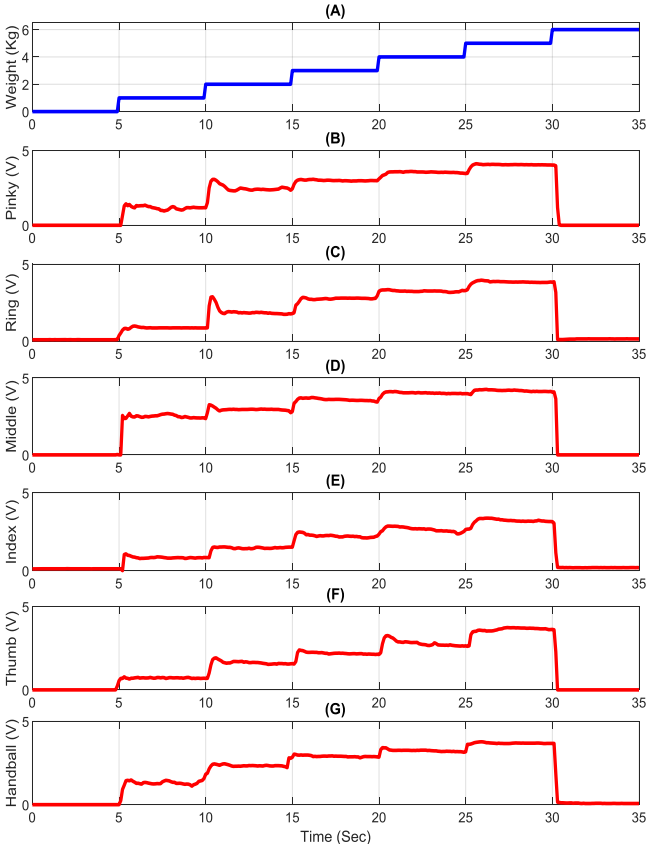


**Fig. 9:** The responses of the pressure sensors when the hanging weight increasing gradually

## 7. Conclusion

A spot sensor glove for the tactile prosthetic hand was developed and evaluated in this study, in order to help the patients of upper limb amputation to recover the feeling during touching the surfaces, grasping objects, and the slippage. Six QTC pressure sensors with 10 mm diameter were used to detect the contact pressure between the tactile glove and the objects during contact. Several significant points can be deduced through this study, which are summarized as follows:

- The QTC pressure sensors with 10 mm diameter and the tactile glove was suitable to be utilized as the sensory system with the haptic prosthetic hand to detect the contact pressure and prevent the slippage.
- The evaluation tests proved the functionality of the tactile gloves design and the good distribution of the sensors over the hand because all the pressure sensors respond during handshake and grasping the cylindrical pipe, which means, all the sensors were in contact with the objects.
- Using a specific number of spot pressure sensors distributing over the hand especially at the critical points like the fingertips and the palm compensate using the tactile data glove with fabric-based sensors.
- The volunteer was only capable to carry the load up to 5 kg during the slippage detection test due to the low friction be-

tween the tactile glove and the objects. Therefore, this point has to improve.

- The tactile glove has the ability to detect the increase in the grasping force due to the increase in the hanging weight. Therefore, the tactile glove has the ability to feedback the slipping information to the user of the prosthetic hand in order to control the applying grasping force and prevent slipping the objects.

The design of tactile glove is the first step for designing a complete haptic feedback stimulation system to enable the amputees to restore sensing their surrounding while they wear their own haptic upper limb prostheses. Therefore in future work, the haptic feedback stimulator will be designed in order to provide the useful information about the contact pressure and the slippage to the amputees' brain with high response, acceptable accuracy, low noise and power consumption, and without any brain's confusing.

**List of abbreviations and symbols:**

| | | |
|---|---|---|
| QTC | : | Quantum tunnelling composites. |
| FSR | : | Force-sensing resistor sensor. |
| PVDF | : | Perpendicular polyvinylidene difluoride. |
| ABS | : | Acrylonitrile Butadiene Styrene. |

# References


[1] L. Osborn, W. W. Lee, R. Kaliki, and N. Thakor, "Tactile feedback in upper limb prosthetic devices using flexible textile force sensors," in Biomedical Robotics and Biomechatronics (2014 5th IEEE RAS & EMBS International Conference on, 2014, pp. 114-119.

[2] R. Clement, K. E. Bugler, and C. W. Oliver, "Bionic prosthetic hands: A review of present technology and future aspirations," The surgeon, vol. 9, pp. 336-340, 2011.

[3] Y. Zheng, Y. Peng, G. Wang, X. Liu, X. Dong, and J. Wang, "Development and evaluation of a sensor glove for hand function assessment and preliminary attempts at assessing hand coordination," Measurement, vol. 93, pp. 1-12, 2016.

[4] V. Correia, V. Sencadas, M. Martins, C. Ribeiro, P. Alpuim, J. G. Rocha, et al., "Piezoresistive sensors for force mapping of hip-prostheses," Sensors and Actuators A: Physical, vol. 195, pp. 133-138, 2013.

[5] D.-K. Kim, J.-H. Kim, Y.-T. Kim, M.-S. Kim, Y.-K. Park, and Y.-H. Kwon, "Robot fingertip tactile sensing module with a 3D-curved shape using molding technique," Sensors and Actuators A: Physical, vol. 203, pp. 421-429, 2013.

[6] B. Matulevich, G. E. Loeb, and J. A. Fishel, "Utility of contact detection reflexes in prosthetic hand control," in Intelligent Robots and Systems (IROS), 2013 IEEE/RSJ International Conference on, 2013, pp. 4741-4746.

[7] G. H. Büscher, R. Kõiva, C. Schürmann, R. Haschke, and H. J. Ritter, "Flexible and stretchable fabric-based tactile sensor," Robotics and Autonomous Systems, vol. 63, pp. 244-252, 2015.

[8] G. Büscher, R. Kõiva, C. Schürmann, R. Haschke, and H. J. Ritter, "Tactile dataglove with fabric-based sensors," in Humanoid Robots (Humanoids), 2012 12th IEEE-RAS International Conference on, 2012, pp. 204-209.

[9] G. Buescher, M. Meier, G. Walck, R. Haschke, and H. J. Ritter, "Augmenting curved robot surfaces with soft tactile skin," in Intelligent Robots and Systems (IROS), 2015 IEEE/RSJ International Conference on, 2015, pp. 1514-1519.

[10] R. D. P. Wong, J. D. Posner, and V. J. Santos, "Flexible microfluidic normal force sensor skin for tactile feedback," Sensors and Actuators A: Physical, vol. 179, pp. 62-69, 2012.

[11] J. Missinne, E. Bosman, B. Van Hoe, R. Verplancke, G. Van Steenberge, S. Kalathimekkad, et al., "Ultra thin optical tactile shear sensor," Procedia Engineering, vol. 25, pp. 1393-1396, 2011.

[12] J. Missinne, E. Bosman, B. Van Hoe, G. Van Steenberge, P. Van Daele, and J. Vanfleteren, "Embedded flexible optical shear sensor," in Sensors, 2010 IEEE, 2010, pp. 987-990.

[13] J. Missinne, E. Bosman, B. Van Hoe, G. Van Steenberge, S. Kalathimekkad, P. Van Daele, et al., "Flexible shear sensor based on embedded optoelectronic components," IEEE Photonics Technology Letters, vol. 23, pp. 771-773, 2011.

[14] G. Sriram, A. N. Jensen, and S. C. Chiu, "Slippage control for a smart prosthetic hand prototype via modified tactile sensory feedback," in Electro/Information Technology (EIT), 2014 IEEE International Conference on, 2014, pp. 225-230.

[15] L. Osborn, N. V. Thakor, and R. Kaliki, "Utilizing tactile feedback for biomimetic grasping control in upper limb prostheses," in SENSORS, 2013 IEEE, 2013, pp. 1-4.

[16] P. Fang, L. Tian, Y. Zheng, J. Huang, and G. Li, "Using thin-film piezoelectret to detect tactile and slip signals for restoring sensation of prosthetic hands," in Engineering in Medicine and Biology Society (EMBC), 2014 36th Annual International Conference of the IEEE, 2014, pp. 2565-2568.

[17] E. D. Engeberg and S. Meek, "Enhanced visual feedback for slip prevention with a prosthetic hand," Prosthetics and orthotics international, vol. 36, pp. 423-429, 2012.

[18] E. D. Engeberg and S. G. Meek, "Adaptive sliding mode control for prosthetic hands to simultaneously prevent slip and minimize deformation of grasped objects," IEEE/ASME Transactions on Mechatronics, vol. 18, pp. 376-385, 2013.

[19] E. D. Engeberg, S. G. Meek, and M. A. Minor, "Hybrid force–velocity sliding mode control of a prosthetic hand," IEEE Transactions on Biomedical Engineering, vol. 55, pp. 1572-1581, 2008.

[20] E. D. Engeberg and S. G. Meek, "Backstepping and sliding mode control hybridized for a prosthetic hand," IEEE Transactions on Neural Systems and Rehabilitation Engineering, vol. 17, pp. 70-79, 2009.

[21] E. D. Engeberg and S. Meek, "Improved grasp force sensitivity for prosthetic hands through force-derivative feedback," IEEE Transactions on Biomedical Engineering, vol. 55, pp. 817-821, 2008.

[22] S. Hirai, "A novel model for assessing sliding mechanics and tactile sensation of human-like fingertips during slip action," Robotics and Autonomous Systems, vol. 63, pp. 253-267, 2015.

[23] Y. Wang, K. Xi, D. Mei, G. Liang, and Z. Chen, "A Flexible Tactile Sensor Array Based on Pressure Conductive Rubber for Contact Force Measurement and Slip Detection," Journal of Robotics and Mechatronics, vol. 28, pp. 378-385, 2016.

[24] R. Fagiani, F. Massi, E. Chatelet, Y. Berthier, and A. Akay, "Tactile perception by friction induced vibrations," Tribology International, vol. 44, pp. 1100-1110, 2011.

[25] S. Youn, D. G. Seo, and Y.-H. Cho, "A micro tactile transceiver for fingertip motion recognition and texture generation," Sensors and Actuators A: Physical, vol. 195, pp. 105-112, 2013.

[26] Z. Yi, Y. Zhang, and J. Peters, "Bioinspired tactile sensor for surface roughness discrimination," Sensors and Actuators A: Physical, vol. 255, pp. 46-53, 2017.

[27] S. Chen and S. Ge, "Experimental research on the tactile perception from fingertip skin friction," Wear, vol. 376, pp. 305-314, 2017.

[28] J. A. Fishel, V. J. Santos, and G. E. Loeb, "A robust micro-vibration sensor for biomimetic fingertips," in Biomedical Robotics and Biomechatronics, 2008. BioRob 2008. 2nd IEEE RAS & EMBS International Conference on, 2008, pp. 659-663.

[29] Y. Fujii, S. Okamoto, and Y. Yamada, "Friction model of fingertip sliding over wavy surface for friction-variable tactile feedback panel," Advanced Robotics, vol. 30, pp. 1341-1353, 2016.

[30] M. Tomimoto, "The frictional pattern of tactile sensations in anthropomorphic fingertip," Tribology International, vol. 44, pp. 1340-1347, 2011.

[31] T. Wilde and C. Schwartz, "Parametric investigation of soft-body penetration into parallel-ridged textured surfaces for tactile applications," International Journal of Solids and Structures, vol. 96, pp. 393-399, 2016.

[32] R. Fagiani and M. Barbieri, "A contact mechanics interpretation of the duplex theory of tactile texture perception," Tribology International, vol. 101, pp. 49-58, 2016.

[33] G. Chimata and C. Schwartz, "Tactile Discrimination of Randomly Textured Surfaces: Effect of Friction and Surface Parameters," Biotribology, vol. 11, pp. 102-109, 2017.

[34] G. Hannig, B. Deml, and A. Mihalyi, "Simulating surface roughness in virtual environments by vibro-tactile feedback," IFAC Proceedings Volumes, vol. 40, pp. 224-229, 2007.

[35] N. Muridan, P. Chappell, A. Cranny, and N. White, "Texture sensor for a prosthetic hand," Procedia Engineering, vol. 5, pp. 605-608, 2010.

[36] E. Kerr, T. McGinnity, and S. Coleman, "Material recognition using tactile sensing," Expert Systems with Applications, vol. 94, pp. 94-111, 2018.

[37] M. Aziziaghdam and E. Samur, "Contact Feedback for Upper Limb Prostheses."
[38] M. Aziziaghdam and E. Samur, "Providing contact sensory feedback for upper limb robotic prosthesis," in Haptics Symposium (HAPTICS), 2014 IEEE, 2014, pp. 575-579.
[39] M. Aziziaghdam and E. Samur, "Real-Time Contact Sensory Feedback for Upper Limb Robotic Prostheses," IEEE/ASME Transactions on Mechatronics, vol. 22, pp. 1786-1795, 2017.
[40] Y. Cho, K. Liang, F. Folowosele, B. Miller, and N. V. Thakor, "Wireless temperature sensing cosmesis for prosthesis," in Rehabilitation Robotics, 2007. ICORR 2007. IEEE 10th International Conference on, 2007, pp. 672-677.
[41] G. Klute, G. Rowe, A. Mamishev, and W. Ledoux, "The thermal conductivity of prosthetic sockets and liners," Prosthetics and orthotics international, vol. 31, pp. 292-299, 2007.
[42] A. Polishchuk, W. T. Navaraj, H. Heidari, and R. Dahiya, "Multisensory Smart Glove for Tactile Feedback in Prosthetic Hand," Procedia Engineering, vol. 168, pp. 1605-1608, 2016.
[43] D. P. Cotton, P. H. Chappell, A. Cranny, N. M. White, and S. P. Beeby, "A novel thick-film piezoelectric slip sensor for a prosthetic hand," IEEE sensors journal, vol. 7, pp. 752-761, 2007.
[44] J. Zhu, X. Hou, X. Niu, X. Guo, J. Zhang, J. He, et al., "The d-arched piezoelectric-triboelectric hybrid nanogenerator as a self-powered vibration sensor," Sensors and Actuators A: Physical, vol. 263, pp. 317-325, 2017.
[45] T. Zhang, H. Liu, L. Jiang, S. Fan, and J. Yang, "Development of a flexible 3-D tactile sensor system for anthropomorphic artificial hand," IEEE sensors Journal, vol. 13, pp. 510-518, 2013.
[46] T. Zhang, L. Jiang, X. Wu, W. Feng, D. Zhou, and H. Liu, "Fingertip three-axis tactile sensor for multifingered grasping," IEEE/ASME Transactions on Mechatronics, vol. 20, pp. 1875-1885, 2015.
[47] M. C. Jimenez and J. A. Fishel, "Evaluation of force, vibration and thermal tactile feedback in prosthetic limbs," in Haptics Symposium (HAPTICS), 2014 IEEE, 2014, pp. 437-441.
[48] M. Franceschi, L. Seminara, L. Pinna, S. Dosen, D. Farina, and M. Valle, "Preliminary evaluation of the tactile feedback system based on artificial skin and electrotactile stimulation," in Engineering in Medicine and Biology Society (EMBC), 2015 37th Annual International Conference of the IEEE, 2015, pp. 4554-4557.
[49] S. Fukushima, T. Nozaki, and K. Ohnishi, "Development of haptic prosthetic hand for realization of intuitive operation," in Industrial Electronics Society, IECON 2016-42nd Annual Conference of the IEEE, 2016, pp. 6403-6408.
[50] S. Fukushima, H. Sekiguchi, Y. Saito, W. Iida, T. Nozaki, and K. Ohnishi, "Artificial Replacement of Human Sensation Using Haptic Transplant Technology," IEEE Transactions on Industrial Electronics, 2017.
[51] E. Battaglia, J. P. Clark, M. Bianchi, M. G. Catalano, A. Bicchi, and M. K. O'Malley, "The Rice Haptic Rocker: skin stretch haptic feedback with the Pisa/IIT SoftHand," in World Haptics Conference (WHC), 2017 IEEE, 2017, pp. 7-12.
[52] S. Casini, M. Morvidoni, M. Bianchi, M. Catalano, G. Grioli, and A. Bicchi, "Design and realization of the cuff-clenching upper-limb force feedback wearable device for distributed mechano-tactile stimulation of normal and tangential skin forces," in Intelligent Robots and Systems (IROS), 2015 IEEE/RSJ International Conference on, 2015, pp. 1186-1193.
[53] S. B. Godfrey, M. Bianchi, A. Bicchi, and M. Santello, "Influence of force feedback on grasp force modulation in prosthetic applications: A preliminary study," in Engineering in Medicine and Biology Society (EMBC), 2016 IEEE 38th Annual International Conference of the, 2016, pp. 5439-5442.
[54] E. I. Germany, E. J. Pino, and P. E. Aqueveque, "Myoelectric intuitive control and transcutaneous electrical stimulation of the forearm for vibrotactile sensation feedback applied to a 3D printed prosthetic hand," in Engineering in Medicine and Biology Society (EMBC), 2016 IEEE 38th Annual International Conference of the, 2016, pp. 5046-5050.
[55] C. Antfolk, M. D'Alonzo, M. Controzzi, G. Lundborg, B. Rosén, F. Sebelius, et al., "Artificial redirection of sensation from prosthetic fingers to the phantom hand map on transradial amputees: vibrotactile versus mechanotactile sensory feedback," IEEE transactions on neural systems and rehabilitation engineering, vol. 21, pp. 112-120, 2013.
[56] M. Nabeel, K. Aqeel, M. N. Ashraf, M. I. Awan, and M. Khurram, "Vibrotactile stimulation for 3D printed prosthetic hand," in Robotics and Artificial Intelligence (ICRAI), 2016 2nd International Conference on, 2016, pp. 202-207.
[57] H. Ritter, R. Haschke, and J. J. Steil, "A dual interaction perspective for robot cognition: grasping as a "rosetta stone"," in Perspectives of neural-symbolic integration, ed: Springer, 2007, pp. 159-178.
[58] D. P. PVT.LTD. RAISE 3D N2 PLUS. Available: https://www.ithink3dp.com
[59] A. M. Donald and E. J. Kramer, "Plastic deformation mechanisms in poly (acrylonitrile-butadiene styrene)[ABS]," Journal of Materials Science, vol. 17, pp. 1765-1772, 1982.
[60] Peratech. QTC SP200 Series Datasheet SP200-05 Series, Single Point Sensors [Online]. Available: https://www.peratech.com/assets/uploads/datasheets/Peratech-QTC-DataSheet-SP200-Series-Nov15.pdf
[61] Sparkfun. (2018). Force Sensitive Resistor Hookup Guide. Available: https://learn.sparkfun.com/tutorials/force-sensitive-resistor-hookup-guide