International Journal of Engineering & Technology, 7 (4.26) (2018) 15-19

International Journal of Engineering & Technology

Website: www.sciencepubco.com/index.php/IJET

Research paper

The Effect of Magnetic Induction Spectroscopy Signal for Cylindrical Screw with Different Length

M. Amran[1*], R. Daud[1], Z. Zakaria[1], M.K. Ali Hassan[1], M. I. Omar[2], F. Mat[1]

[1]*Fracture and Damage Mechanics (FDM) SIG, School of Mechatronic Engineering Universiti Malaysia Perlis (UniMAP)*
[2]*University Health Center, Universiti Malaysia Perlis, Kampus Pauh Putra 02600 Arau, Perlis, Malaysia*
**Corresponding author E-mail: muhammad.bin.amran@gmail.com*

Abstract

In medical surgical procedures, screw is commonly used when it comes into internal and external fixation surgery. The size of screw, which is classified as the diameter and length of screw plays an important role to stability the bone implant fixation. Previous studies showed there is lack of investigation on screw loosening detection that brings the problem of detecting the failures of bone implant in a long bone such as femur. Detection technique of this kind of problem is important in medical technologies to ensure better healing. The purpose of this study is to investigate the received signal of electromagnetic field on the different cylinder length by employing a single channel of magnetic induction spectroscopy. This study is used to evaluate the current density distribution in the cylinder screws under the action of electromagnetic field. The diameter of cylinder screw used in this simulation study is 3mm diameter based on the medical surgery procedures and the length of cylinder focuses onto 3 different lengths (22mm, 26mm, and 30mm). The simulation of this study concludes that COMSOL Multiphysic 5.2a software with a range of frequency 1MHz to 10MHz is used. The received magnetic field and current density of each model shows that the conductivity is changed based on the geometry of the cylindrical screw.

Keywords: *magnetic induction spectroscopy; bone implant fixation; electromagnetic field; current density*

1. Introduction

The internal fixation of fractures has evolved in recent decades with a change of emphasis from mechanical to biological priorities [1]. The use of internal fixation in medical purpose is to support and stabilize the bone fracture which increasing the time of healing process. Implementation of internal fixation of unstable fractures is not always successful [2]. Normally, patients were suffered from internal fixation and open reduction fractures in their long bone which caused by their weight [3]. This may lead of micro-movement which result in loosening of the implant and a delay in healing [1]. In orthopedic surgery, fractures of long bones being the common fractures encountered. This fractures was associated with a soft tissue damage which resulting significant trauma to a patient [4].

A one step to identify how the implant is failure must be taken to ensure a proper healing. Implant failures arise mainly from loosening or breakage of the internal fixation device [3]. This may lead to lengthens the healing process, increase patient's morbidity and increase the cost of treatment [4]. The considering method to be used in this paper is to know how the screw is loose by knowing the screw condition. This can be done using the electromagnetic for every case. The considering technique to be used in this paper is using Magnetic Induction Spectroscopy (MIS) which was conduct in COMSOL Multiphysics as a simulation tools.

Magnetic induction concept was recognized as electromagnetic induction spectroscopy (EMIS) which used to detect hidden metals using multi-frequency approach based on metal's unique Passive Electrical Properties (PEP) [5]. The non-contacting magnetic induction technologies was then evolved and adapted to measure bio-impedance level and dielectrical properties in biological sample[6]. This study was focusing on magnetic induction spectroscopy with a single channel multi-frequency. Fig. 1 below shows the magnetic induction spectroscopy principal which is the typical concept.

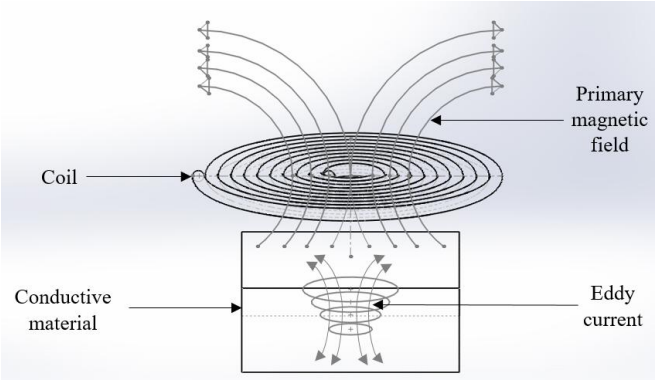

Fig. 1: Magnetic induction spectroscopy peincipal

2. Methodology

Magnetic induction spectroscopy (MIS) is a non-contact measurement which can be used in engineering and medical procedure. MIS also known as non-invasive in medical procedure which theoretically involved with sensor and sample [8]. MIS have same principal with magnetic induction tomography (MIT) which is non-invasive but MIT is a multi-channel magnetic induction imaging system model with rotatable platform rather than MIS which focus on single channel magnetic induction [8]. A Fig. 2 shows

Copyright © 2018 Authors. This is an open access article distributed under the Creative Commons Attribution License, which permits unrestricted use, distribution, and reproduction in any medium, provided the original work is properly cited.

the simulation workflow of MIS system of this paper in COMSOL Multiphysics.

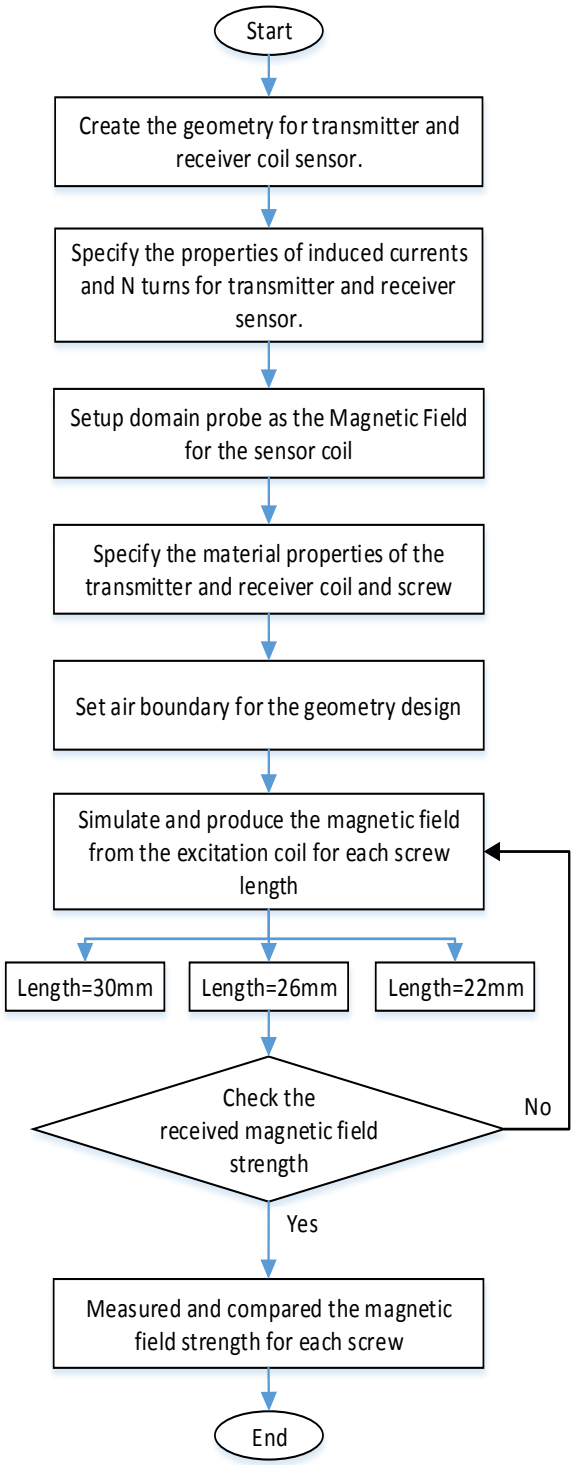

Fig. 2: Flow chart of the MIS simulation.

The simulation is performed on a single channel magnetic induction spectroscopy. The both sensor coil's geometry and sample's geometry is designed in COMSOL Multiphysics with respect to specified properties. The coil is used to generate magnetic field and specification of it is very important to generate strong magnetic field to cross and detect the properties of the sample by using the principle of Magnetic Induction Spectroscopy. The coil's turns is set to 12 turns and 5 turns for transmitter and receiver respectively. 1A and 0.5A current is applied for transmitter and receiver respectively. The detail specification of coil is shown in Table 1.

The material used for the coil sensor and sample is a copper and stainless steel respectively. Applied current on the transmitter is important to produce magnetic field. With respect to the MIS principle, when the coil excitation produced the magnetic field which is the primary field, another secondary field which is the eddy current will be induced in the conductive material which is the screw. Eddy currents build their own magnetic field but in the oppositely from the primary field excites from the coil (transmitter) [9]. In this case, currents is an important part as an alternating current which to be fed into the coil to generate magnetic flux around the coil.

Table 1: Properties of the transmitter and receiver coil [10].

No	Coil Type	Properties	Transmitter	Receiver
1	Spiral Coil	Number of turns, N	12 turns	5 turns
2		Current, *I*	1A	0.5A
3		Diameter of wire	1 mm	1 mm
4		Diameter of coil	20 mm	20 mm

The range of the frequency in this simulation is 1 MHz to 10 MHz. By using COMSOL Multiphysics, the transmitter is designed to produce a magnetic field across a sample and can be detected on the receiver. The signal will be simulated and modelled by using COMSOL Multiphysics. Magnetic Induction Spectroscopy requires an alternating magnetic excitation field to make the measurement of radiation intensity from the excitation coil to the sample under investigation [11].

Fig. 3(a), 3(b) and 3(c) shows the main part of the system designed which are the coils, sample and the air boundary around the system for accurate result. The gap from transmitter and receiver is fix into 35mm for every model designed. The transmitter and receiver position is on top and bottom respectively which designed in a spiral coil's type to get more sensitivity [10]. Each cylinder length is tested using single channel magnetic induction spectroscopy in Comsol Multipysics with multi-frequency to study the behavior of the magnetic field strength.

As shown in Fig. 3(a), 3(b) and 3(c), the transmitter and receiver is put oppositely to each other and the sample of cylinder is put in between of transmitter and receiver. As mentioned, there is 3 different model to be simulate which consists of 3 different cylinder's length which is 30mm, 26mm and 22mm. To make a non-contact measurement, a different gap for each model is put between the sample and sensor coil. The simulation of these three models was done using the same properties of sensor coil for transmitter and receiver. The air boundary is set around the geometry of sensor and sample to be simulate.

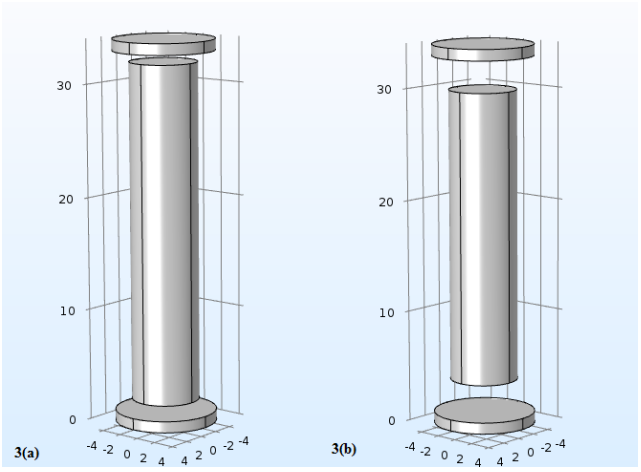

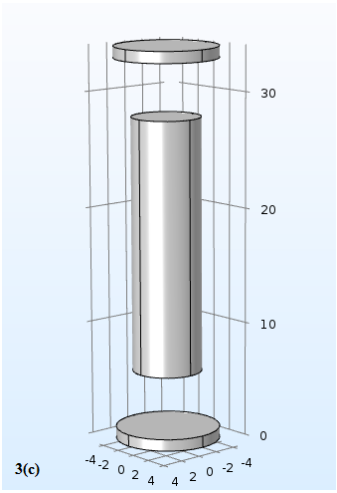

Fig. 3(a), (b) and (c): Setup Model of MIS in COMSOL for every cylinder length of 30mm, 26mm and 22mm respectively.

In MIS, the measured object is always placed between a transmitting and receiving coil, and the current flow in the transmitting coil induces a primary magnetic field. This primary magnetic field then incurs eddy currents in the object that in turn produce a secondary magnetic field [12]. Both the primary and secondary fields are detected by the receiving coil. Fig. 4 show the sample after being simulate using the magnetic induction. The result of this simulation is collected in a data table and plotted.

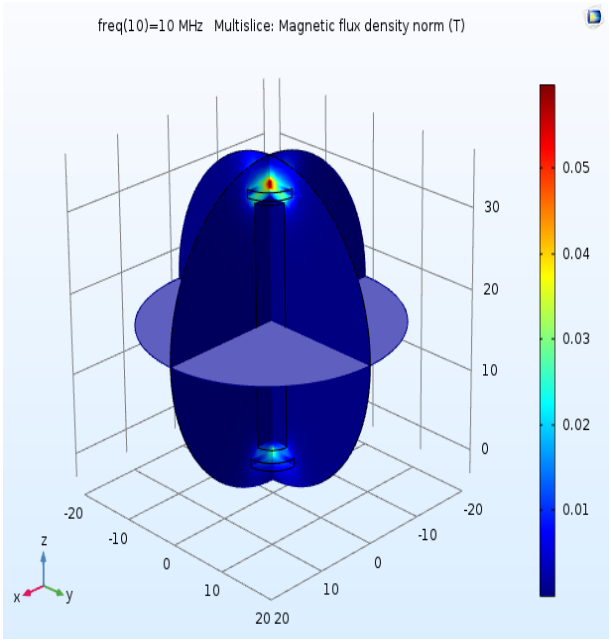

Fig. 4: Simulation of Magnetic Induction Spectroscopy (MIS)

3. Result and Discussion

Simulation process of the MIS system is done in COMSOL Multiphysics including the geometry design of sensor coil and sample. This system is perform in single channel magnetic induction and it's useful to measure the magnetic field strength and induced current density. Single channel magnetic induction spectroscopy included with one transmitter and one receiver which is opposite to each other [10]. The graph below show the result from the simulation process of cylinder sample. With different case of cylinder length, three graph of each case is developed in Fig. 6a, 6b and 6c. Fig. 5 below show the method to calculate the magnetic field absolute numbers based on calculation given.

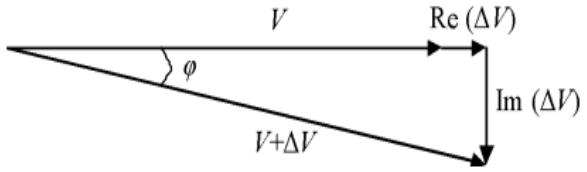

Fig. 5: Phasor diagram representing the detected primary signal V and secondary signal ΔV[12]

$$V+\Delta V = [(V^2+Re(\Delta V)^2) + (Im(\Delta V)^2)]^{1/2} \quad (1)$$

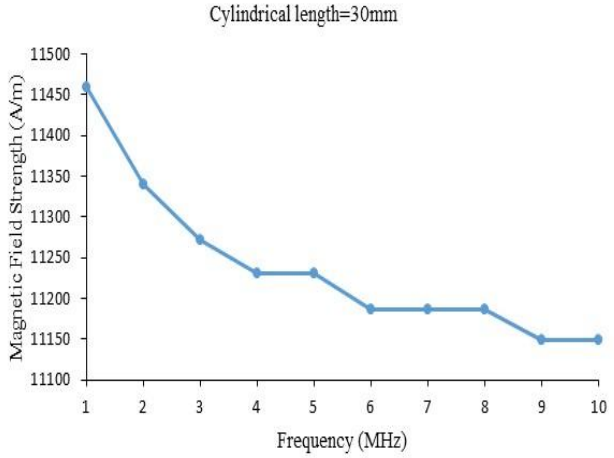

Fig. 6(a): Magnetic field strength produced at the receiver for cylindrical length=30mm

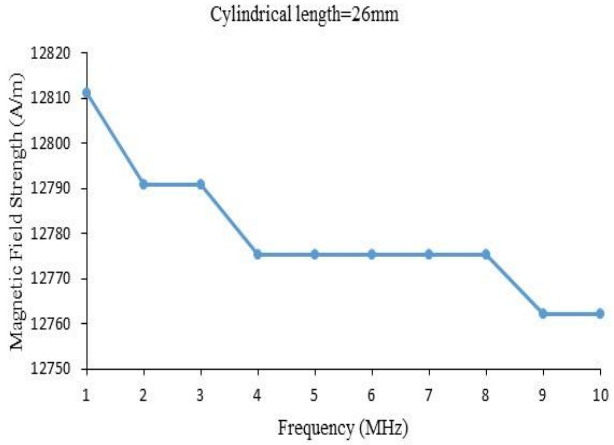

Fig. 6(b): Magnetic field strength produced at the receiver for cylindrical length=26mm

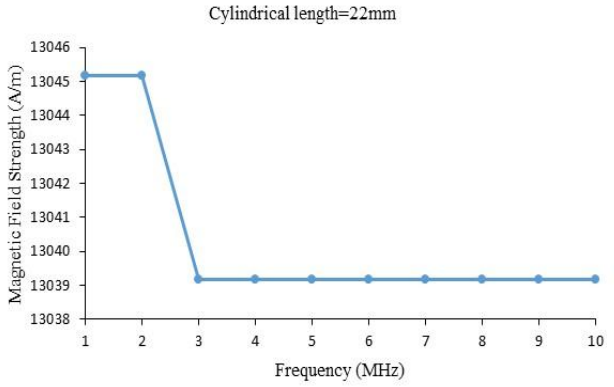

Fig. 6(c): Magnetic field strength produced at the receiver for cylindrical length=22mm

From the graph above, the y-axis represent the magnetic field strength (A/m) and the x-axis represent the frequency (MHz) used. The alternating current in the transmitter coil generate the electromagnetic field which is the induction field propagated within the cylinder. The generated eddy current which is the secondary field for magnetic field strength is measured at the receiver. As shown in figure above, the magnetic field strength at the receiver is increased when the length of the cylinder decreased. This is because each of cylinder have its own conductivity and this conductivity will cause the changes of magnetic field strength.

Besides of magnetic field strength, induced current density also used in this simulation process. Induced current density is collected at the receiver coil and graph was plotted in the Fig. 7(a), 7(b) and 7(c).

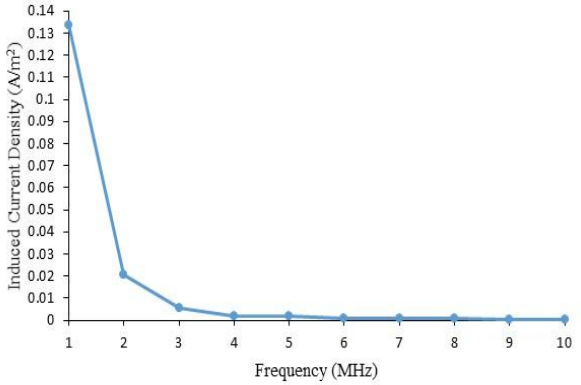

Fig. 7(a): Induced current density produced at the receiver for cylindrical length=30mm

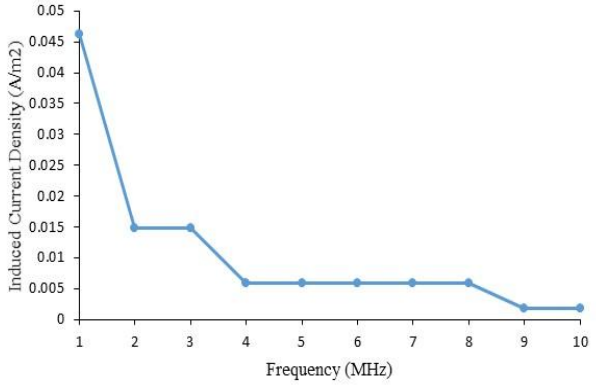

Fig. 7(b): Induced current density produced at the receiver for cylindrical length=26mm

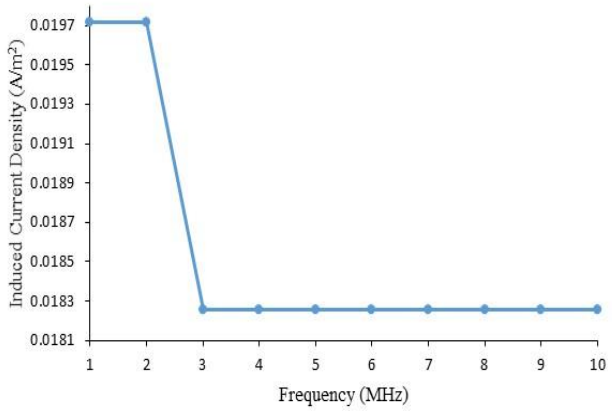

Fig. 7(c): Induced current density produced at the receiver for cylindrical length=22mm

From the above result, Fig. 7(a), 7(b) and 7(c) shows the induced current density at the receiver for every case of cylinder length. From the graph, y-axis represent the induced current density (A/m^2) and x-axis represent the frequency (MHz) used. It is shows that the induced current density is decreased when the length of cylinder become shorter. The sum of the primary and secondary fields is measured at the receiver coil which represent the result of induced current density of each sample. When the value of receiver is higher, then it received more secondary field which is altered the primary field to penetrates into the sample [10]. So, the length of the sample gives effect for the induced current density which explains that the higher the value of length, then the higher the induced current density. This is because the conductivity is depend on the cylinder length which state that the more conductivity, the more the induced current density. The conductive host of the model also influenced the magnetic field and current density received at the receiver.

4. Conclusion

Detection of implant failure can be implemented by extending the method used in this paper with a detailed simulation. Because of human body is a volumetric with a conductivity material and it made of from several tissues with different conductivity which make the Magnetic Induction Spectroscopy (MIS) easy to be implemented [13]. The magnetic field strength can be the important parameter in proving the result of this method. The application of MIS have been widely used in medical purpose experiment like fetal hypoxia detection, fetal acidosis detection, jaundice detection and breast cancer detection. This is to ensure the healing or health of human body is upgraded to a new level which can save a lot of particular parameter. So, the MIS system can be implemented to human body and also the material of bone implant which bring to the failure of internal fixation can be identified on early stage.

Acknowledgements

The author would like to acknowledge the support from the Fundamental Research Grant Scheme (FRGS) under a grant number of FRGS/1/2017/TK03/UNIMAP/02/10 from the Ministry of Higher Education Malaysia.

References

[1] S. M. Perren, "Of Long Bone Fractures The Scientific Basis Of Biological Internal Fixation : Choosing A," Pp. 1093–1110.

[2] T. R. Davis, J. L. Sher, a Horsman, M. Simpson, B. B. Porter, and R. G. Checketts, "Intertrochanteric femoral fractures. Mechanical failure after internal fixation.," *J. Bone Jt. Surg. [Br]*, vol. 72, no. 1, pp. 26–31, 1990.

[3] A. O. Ogbemudia and P. F. A. Umebese, "Implant failure in osteosynthesis of fractures of long bones," vol. 5, no. 2, pp. 5–8, 2006.

[4] S. Kumar, D. Kumar, S. P. S. Gill, P. Singh, M. Raj, and A. Gupta, "Evaluation of Implant Failure in Long Bones Fractures – A Retrospective Study," no. March, pp. 64–68, 2014.

[5] B. Gowry, A. B. Shahriman, and Z. Zulkarnay, "Inductive phase shift as a future cost effective diagnostic tool in breast cancer localization: A prologue study," *AIP Conf. Proc.*, vol. 1774, 2016.

[6] M. D. O'Toole, L. A. Marsh, J. L. Davidson, Y. M. Tan, D. W. Armitage, and A. J. Peyton, "Non-contact multi-frequency magnetic induction spectroscopy system for industrial-scale bio-impedance measurement," *Meas. Sci. Technol.*, vol. 26, no. 3, p. 35102, 2015.

[7] H. Scharfetter, R. Casañas, and J. Rosell, "Biological Tissue Characterization by Magnetic Induction Spectroscopy (MIS): Requirements and Limitations," vol. 50, no. 7, pp. 870–880, 2003.

[8] A. Barai, S. Watson, H. Griffiths, and R. Patz, "Magnetic induction spectroscopy: non-contact measurement of the electrical conductivity spectra of biological samples," *Meas. Sci. Technol.*,

vol. 23, no. 8, p. 085501, 2012.
[9] I. Pitropakis, H. Pfeiffer, and M. Wevers, "Crack detection in aluminium plates for aerospace applications by electromagnetic impedance spectroscopy using flat coil sensors," *Sensors Actuators, A Phys.*, vol. 176, pp. 57–63, 2012.
[10] M. Hafiz *et al.*, "3D Model Simulation on Magnetic Induction Spectroscopy For Fetal Acidosis Detection Using COMSOL Multiphysics," vol. 050003, 2016.
[11] Z. Zakaria, "Simulation of Single Channel Magnetic Induction Spectroscopy for Fetal Hypoxia Detection Jurnal Teknologi Full paper Simulation of Single Channel Magnetic Induction Spectroscopy for Fetal Hypoxia Detection," no. November, 2015.
[12] Q. Yan, G. Jin, K. Ma, M. Qin, W. Zhuang, and J. Sun, "Magnetic inductive phase shift : a new method to differentiate hemorrhagic stroke from ischemic stroke on rabbit," pp. 1–11, 2017.
[13] A. J. Jurimah *et al.*, "Development of Magnetic Induction Spectroscopy System in Biomedical Application to Detect Jaundice," vol. 050008, 2016.