International Journal of Engineering & Technology, 7 (4.30) (2018) 131-135

International Journal of Engineering & Technology

Website: www.sciencepubco.com/index.php/IJET

Research paper



Near-Infrared Spectroscopy (NIRS)-based Digit Skin Tissue Blood Flow Measurement System

Tan Ying Yin[1], Farhanahani Mahmud[1,2]*, Nur Ilyani Ramli[1,2]

[1] Department of Electronic Engineering, Faculty of Electrical and Electronic Engineering
[2] Microelectronics and Shamsuddin Research Centre (MiNT-SRC)
Universiti Tun Hussein Onn Malaysia, 86400, Parit Raja, Batu Pahat, Johor, MALAYSIA
**Corresponding author E-mail:farhanah@uthm.edu.my*

Abstract

The tissue blood flow (BF) and vascular resistance are the important information for consult peripheral vascular system which related to cardiovascular disease. Unfortunately, most of the current BF monitors are costly, built in huge size and preferable use in hospital and clinic. In the present study, a portable digit skin tissue BF measurement system had been developed using Near-infrared spectroscopy (NIRS) method with simple circuitry and low cost that can be afforded by patients to monitor their cardiovascular information. This system consists of a self-developed NIRS probe; LED and a photodiode, and an Arduino Uno board with MATLAB software as the processing unit. The NIR LED transmits 810 nm light source through biological tissue then detected by the photodiode. The output signal from the NIRS probe is based on resistance changes in the photodiode and by applying the voltage divider law, the signal is further processed by the Arduino with the MATLAB software. Then, according to the modified Lambert-Beer Law in scattering medium, the change in total concentration of haemoglobin ($\Delta c_{TotalHb}$) is plotted in order to get a quantitative BF reading which based on its maximum change during venous occlusion. To evaluate the proposed BF measurement system, BF measurement tests had been conducted on four healthy subjects during resting and after exercise. The study had shown that the results of BF after the exercise were in average of 1.5 time higher than the resting BF and this finding agrees with previous research works.

Keywords: *Arduino; Digit Skin Tissue Blood Flow; MATLAB; Modified Lambert-Beer Law; NIRS*

1. Introduction

Near infrared (NIR) is known as a light that able to penetrate deep into biological soft tissues according to two basic principles of NIR light; the transmission of tissue to the NIR and the absorption of NIR light of compounds in tissue is dependent to the oxygenation status of the tissue [1]. Unlike the ultraviolet or x-ray, NIR can be utilized without any special training for operators because it has extremely low energy levels that does not damage living tissues.

Near-infrared spectroscopy (NIRS) uses the NIR light to measure non-invasively concentration of haemoglobin, oxygen saturation and tissue BF [2]. NIRS provides wide range for clinical research tools and clinical applications. For instance, brain mapping studies, breast cancer detection and, noninvasive monitoring of blood oxygen saturation and bilirubin concentration [3,4,5]. This is because NIRS is non-invasive, portable and the technology is relatively inexpensive that benefits to the users for daily monitoring of the cardiovascular information at home.

Cardiovascular diseases also known as heart and blood vessel diseases. Cardiovascular diseases cause by the narrowed or blocked in blood vessels that could affect the supply of nutrient and oxygenated blood to function on legs, arms, feet and kidneys and could lead to a heart attack, chest pain or stroke. These diseases can be prevented by monitoring cardiovascular information every day at the early stage to diagnose, cure and take adequate health cares to prevent the disease from getting serious. In fact, the cardiovascular information on peripheral vascular system such as vascular resistance and tissue BF are important for the arterial blood pressure measurement and they are frequently used in clinical and hospitals for monitoring. With the current technology, there are several types of tissue BF monitor available in the market, such as PSA-500 (Medical Bioscience, Japan) and moorVMS-LDF laser Doppler but they are high cost and preferable use in hospital and clinic because of their relatively large size.

Venous occlusion plethysmography is an old style technique used in the non- invasive measurement of BF, blood volume or known as vascular volume in organ or local tissue. The technique was first introduced by Hewlett and Zwaluwenburg over 90 years ago. The technique had been widely used for experimental, clinical setting and human vascular physiology in vivo research [6]. Nowadays, there are many techniques can be used for measuring the vascular volume, one of it is using NIRS. Vascular volume increases when the pressure of occluding cuff is inflated for venous occlusion, at the same time the concentration of haemoglobin at peripheral tissues will increase due to the arterial blood in flow and venous blood outflow from the interrupt. The increasing of vascular volume and the haemoglobin concentration both can be used for NIRS to calculate tissue BF [7].

Hence, the purpose of this project is to develop a portable skin tissue BF measurement system based on NIRS with venous occlusion method. Different with pulse oximeter, the BF measurement system could provide the information of the change in concentration of total haemoglobin and the non-pulsatile volumetric tissue BF reading based on plethysmography method. With the help of

Copyright © 2018 Authors. This is an open access article distributed under the Creative Commons Attribution License, which permits unrestricted use, distribution, and reproduction in any medium, provided the original work is properly cited.

the system, patient can monitor their cardiovascular information every day for early stage of diagnose and taking adequate health cares.

2. Methodology

In the present study, a skin tissue BF measurement system at a digit (finger) based on the near-infrared spectroscopy (NIRS) has been developed by employing modified Lambert-Beer law to determine the change of total haemoglobin concentration and then, the value of the BF through the venous occlusion method [8,9]. A portable NIR probe had been constructed using a minimal number of electronic components generally using an Arduino Uno microcontroller, an NIR LED and a photodiode for a lower cost purpose. The signal acquired by the NIR probe will then be computed using MATLAB software and the results from the BF measurement will be displayed in the MATLAB GUI for monitoring.

2.1. Modified Lambert-Beer law

The modified Lambert-Beer law also known as Lambert-Beer law in scattering medium such as biological tissue. This law states that an absorbing chromophore dissolved in a non-absorbing medium, the attenuation in optical density is proportional to the concentration of the chromophores in the solution and the scattering optical distance [10]. Haemoglobin compounds in the tissue have an absorption characteristic in near-infrared light, thus the concentration of the haemoglobin can be determined through the near-infrared spectroscopic technique which represents the law.

$\Delta A(t)$ is the change in the attenuation during t_0 to t time variable, I_0 is the light intensity incident on the tissue and I is the light intensity transmitted through the tissue. Besides, $\varepsilon_{HbO_2}(\lambda)$ and $\varepsilon_{Hb}(\lambda)$ are the specific attenuation coefficient of oxygenated haemoglobin HbO_2 and deoxygenated haemoglobin Hb, $\Delta c_{HbO_2}(t)$ and $\Delta c_{Hb}(t)$ are the change in concentration of the HbO_2 and the change in concentration of the Hb during t_0 to t time variable and the differential path length, L is the true optical distance due to scattering which is the product of differential path length factor, DPF and direct light source and detector distance, d. The DPF is the scaling factor which relates separations between source and detector to the average path length light travels between the source and the detector, and it depends on several factors such as wavelength, age of the subject, and type of tissue [11,12].

From equation (1), the values of $\Delta c_{HbO_2}(t)$ and $\Delta c_{Hb}(t)$ can be calculated using two NIR lights with different wavelength, where the specific attenuation coefficients of HbO_2 and Hb in the NIR range of 450 nm to 1000 nm wavelength [13]. Moreover, the sum of Hb and HbO_2 concentration reflects the total amount of haemoglobin, $\Delta c_{TotalHb}$. According to the absorbance index of HbO_2 and Hb is around 810 nm [14], thus $\Delta c_{TotalHb}$ can be calculated from the change in attenuation at this wavelength by applying the modified Lambert-Beer law in equation (2). The value of the specific attenuation coefficient of total amount of haemoglobin, $\varepsilon_{TotalHb}(\lambda)$ for 810 nm wavelength is 0.858 $(cm \cdot mM)^{-1}$ which reported by [15]. The DPF is 4.0, which is collected from the average values found for DPF in human forearm lie between 3.59 and 4.57 [8], and d is 0.5 cm since the NIR light source and detector is designed based on a reflection mode and the depth of tissues measured by NIRS is assumed as half of d [16]. Where, the measurement site is at subcutaneous tissue of a hand thumb with the depth of 0.18 to 0.25 mm [17]. Here, the subcutaneous tissue contains larger blood vessels and nerves than those found in the dermis [18].

$$\Delta A(t) = \log \frac{I(t_0)}{I(t)} = \varepsilon \cdot [\Delta c_{HbO_2}(t) + \Delta c_{Hb}(t)] \cdot L \quad (1)$$

$$\Delta A(t) = \varepsilon \cdot \Delta c_{TotalHb}(t) \cdot L \quad (2)$$

2.2. NIRS based tissue blood flow

To measure the BF using NIRS method, venous occlusion is applied by cuff inflate. When the venous occlusion is applied, arterial blood inflow in peripheral region is not affected, while the venous blood out flow is interrupted, the blood volume is increased simultaneously and this leads to the increase of total haemoglobin concentration, where the maximum increase rate of total haemoglobin concentration reflects the BF. The BF formula is as stated in equation (3), where $\Delta c_{TotalHb_{\max}}$ as shown in equation (4) is the maximum increase rate of total haemoglobin concentration. [Hb] is the haemoglobin concentration in the blood and the average concentration of haemoglobin is 14 g/dL in female and 16 g/dL in male [19]. The unit of BF is ml/(100g·min) by the fact that 1 mole of hemoglobin is equal to 6.8 x 104 g, the unit for $\Delta c_{TotalHb_{\max}}$ is g/(l·min) and the tissue density is 1.06 g/ml where 1 liter of tissue can be assumed as 1060 gram of tissue.

$$Blood\ flow = \frac{\Delta c_{Total\ Hb_{\max}}}{[Hb]}; unit: [\frac{\text{ml}}{100\text{g} \cdot \text{min}}] \quad (3)$$

$$\Delta c_{TotalHb_{\max}} = \frac{\Delta C_{TotalHb}(t_2) - \Delta C_{TotalHb}(t_1)}{\frac{t_2 - t_1}{60}}; unit: [\frac{\text{g}}{\text{l} \cdot \text{min}}] \quad (4)$$

2.3. NIR probe design

The 810 nm NIR LED and a photodiode were used to design the NIR sensor based on a reflection mode. 810 nm was chosen as it is the haemoglobin isosbestic point used to measure the overall haemoglobin concentration of a NIR light [14]. According to Figure 1 of the probe design for the NIR sensor, 0.5 cm distance between the NIR light source and detector was used so that the NIR light source can penetrate the depth of 0.25 cm where blood tissue in the skin layer can be found. Figure 2 shows the circuitry of the NIR sensor. This simple circuit consists of the LED and the photodiode which respectively connected with the resistor and the potentiometer in series in order to keep the current and voltage in their forward current and voltage values, and the Arduino as the controller of signals from the NIR sensor, where the power supply and grounding are obtained from the Arduino Uno pin 5V and pin GND, respectively. According to the voltage divider rule, the input signal from the NIR sensor will change according to the changes in the photodiode resistivity which based on the light intensity received from the NIR LED. Meanwhile the two 1S2076A diodes were used as a protector from surge event. The prototype of the NIR sensor is as shown in Figure 3.

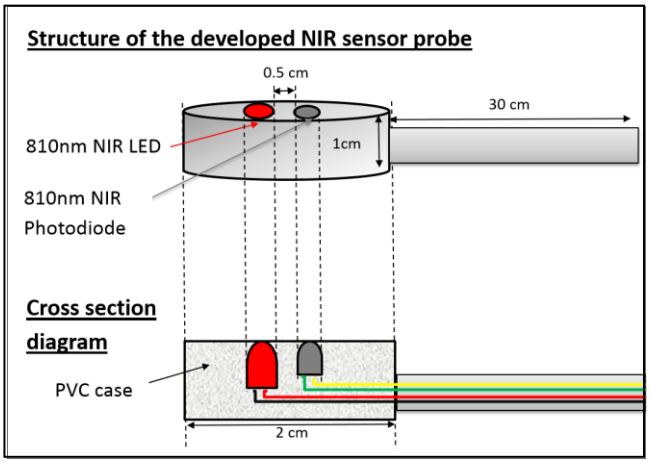

Fig. 1: Probe design for NIR sensor

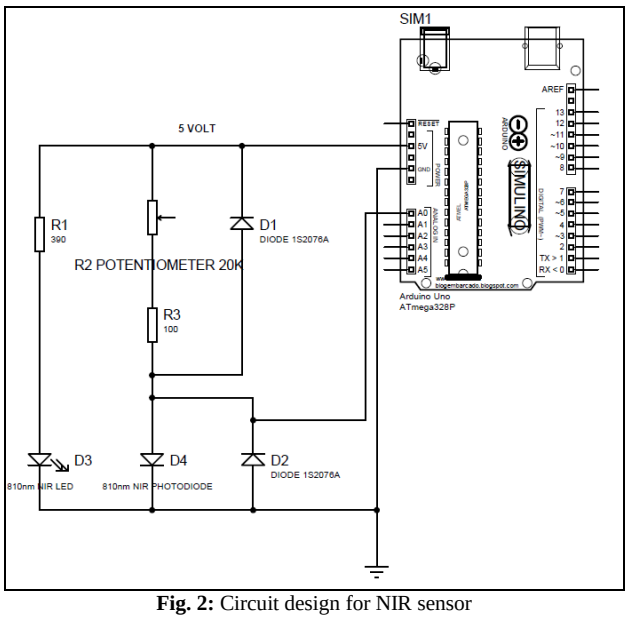

Fig. 2: Circuit design for NIR sensor

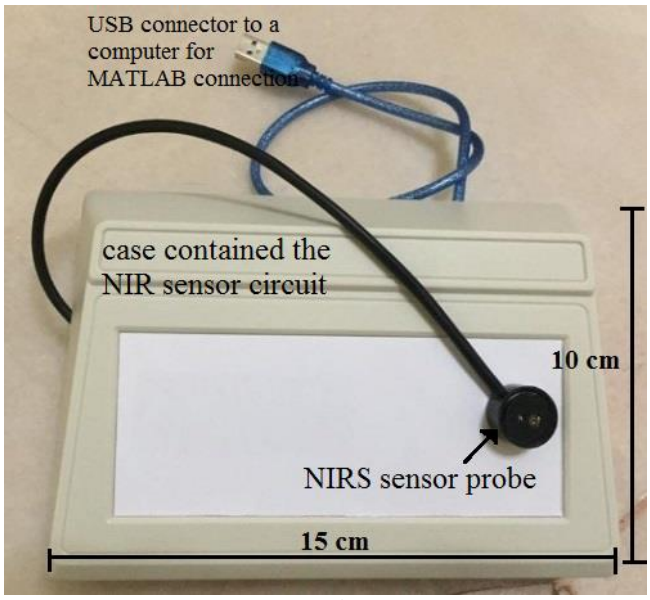

Fig. 3: Prototype of the NIR sensor

2.4. BF measurement procedure

An experiment of the digit skin tissue BF measurement had been done based on the protocol as shown in Table 1. Four non-smoking and healthy subjects (two females and males) were contributed in this experiment, their details are presented in Table 2. According to Table 1, the measurement was started after each subject was given around five minutes rest, was waited for around 15 seconds before the venous occlusion was applied to ensure that the basal line of $\Delta c_{TotalHb}$ stayed in a stable equilibrium at a specific low value. Then, the venous occlusion with 50 to 80 mmHg was applied and maintained for around 25 seconds to measure the BF. Here, the occlusion should be applied right after 15-second of the measurement since the BF calculation was set starting at the 15-second for a duration of 25 seconds only. Then the cuff was deflated, where the $\Delta c_{TotalHb}$ recovered in around 20 seconds and back to basal line.

The experiment was an evaluation test of the digit skin tissue BF measurement system based on a comparison of the BF readings during resting and after conducting an exercise. For the exercise, the subjects had to perform a five-minute rope jumping exercise followed by a five-minute resting period before the BF measurement was done. During these experiments, the ambient temperature had been set to a room temperature of 26 ℃, since changes in the temperature can cause changes in the BF reading.

Table 1: Experiment protocol for the digit skin tissue BF measurement

Rest	**Experiment for 60 seconds**		
Rest before perform experiment	**Wait for $\Delta c_{TotalHb}$ to stay stable on a basal line**	**Apply venous occlusion 50 to 80 mmHg**	**Release venous occlusion**
5 min.	15 sec.	25 sec.	20 sec.

Figure 4 shows the block diagram of the digit BF measurement system. Based on the signal from the NIR sensor, the Arduino UNO will acquire the 810 nm NIR light intensity, *I* signal at 1 Hz sampling rate. Then, ΔA is calculated and based on the modified Lambert-Beer law, $\Delta c_{TotalHb}$ is obtained to get a real time BF measurement through MATLAB. While, Figure 5 shows the $\Delta c_{TotalHb}$ waveform from the MATLAB window where the BF can be obtained during the venous occlusion according to the maximum increase in $\Delta c_{TotalHb}$, $\Delta c_{TotalHb_{max}}$ divided by the haemoglobin concentration in blood, [Hb].

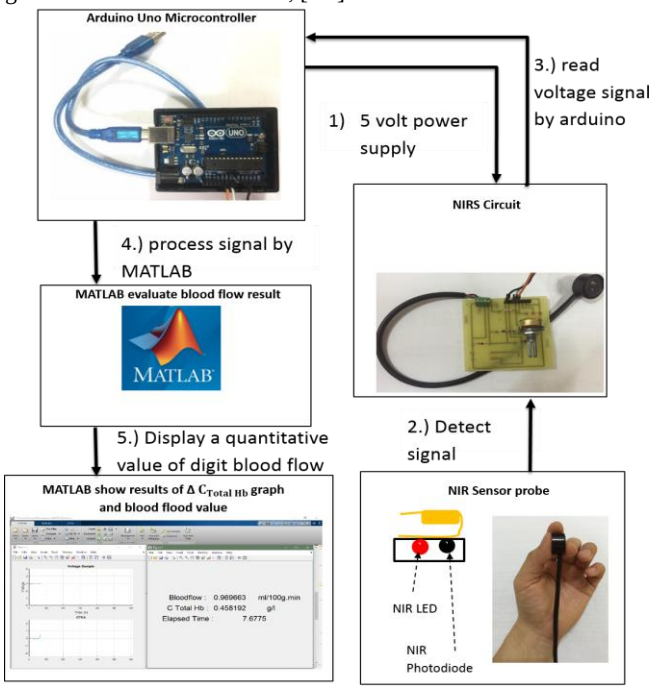

Fig. 4: Block diagram of the digit skin tissue BF measurement system

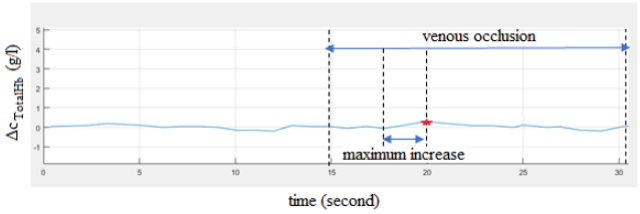

Fig. 5: A sample of the BF measurement

3. Results and Discussion

In the present study, the digit skin tissue BF measurement had been done based on a comparison of the BF readings during resting and after conducting an exercise to evaluate the developed system. Table 2 shows the results of BF resting and after exercise for subjects *A*, *B*, *C* and *D*. From the results shown in Table 2, the BF after the exercise for subjects *A*, *B*, *C* and *D*, respectively were around 2.2, 1.4, 1.2 and 1.3 times the BF during the resting, with the average factor of 1.5. Moreover, it was found that the BF of the male subjects was higher than the BF of the female subjects. This is because the cardiac output which represents the blood volume is greater for males than for females [20] and an increase in blood volume increases the blood pressure, where the higher the pressure exerted by the heart, the faster blood will flow [21].

During the exercise, body muscles are working with some capacity, the cardiac output may increase to range 70% to 80% due to the oxygen consumption during exercise [22]. When body muscle require more oxygen which is transported by the red blood cells, the heart will begin to beat faster to pump the blood faster which will stimulate the increment in blood pressure within cardiovascular system in order to supply adequate oxygen to the whole body and at the same time increasing the BF in artery. The increased BF that is associated with increased metabolic activity of an organ or tissue is called as active hyperaemia. These results showed a good agreement with the previous study by [8] that found out from rest to exercise, the forearm BF in NIRS method increased significantly with a factor of 1.4. Moreover, it was notified that the readings of resting BF from the digit skin tissue BF measurement system were comparable to a previous study in [9].

Table 2: BF results of four healthy subjects, *A*, *B*, *C* and *D* during resting and after exercise

Subjects	***Gender***	***Age (years)***	***Weight (kg)***	***Height (cm)***	***BF during Resting (mL/100g.min)***			***BF after Exercise (mL/100g.min)***		
					Exp.1	**Exp.2**	**mean ± standard error**	**Exp.1**	**Exp.2**	**mean ± standard error**
A	**Female**	24	53	162	8.14	8.64	8.39 ± 0.36	18.00	19.53	18.77 ± 0.76
B		25	55	157	10.08	11.84	10.96 ± 1.25	15.23	15.34	15.28 ± 0.05
C	**Male**	26	78	177	40.89	38.71	39.80 ± 1.54	45.90	47.00	46.45 ± 0.55
D		26	88	180	29.75	28.67	29.21 ± 0.76	38.56	38.00	38.28 ± 0.28

4. Conclusion

In this research project, the NIRS digit skin tissue BF measurement system that is able to monitor the non-pulsatile BF based on plethysmography method was successfully developed. The NIR sensor was developed for portable purposes with a simple circuitry and the Arduino UNO as controller. Then, the system was able to gain the BF reading in real-time by calculating the signal acquired by the sensor using MATLAB software. The system performance was tested by conducting an experiment comparing the BF during rest and after exercise, where the result had shown a good agreement with the related previous research work. The NIRS digit BF measurement system is less expensive since it requires less components to build. The simplicity of NIRS BF measurement system will make it gaining popularity for a range of research and medical applications. However, further improvement of NIRS BF measurement system is required, such as integrations of an automatic cuff pressure pump and a graphical LCD toward a fully portable NIRS digit BF measurement system development.

Acknowledgement

The authors would like to acknowledge the Research Management Center, Universiti Tun Hussein Onn Malaysia (RMC, UTHM) for supporting the publication of this research paper through TIER 1 research grant (Grant Vot : H238) and Microelectronics and Nanotechnology Shamsuddin Research Centre (MiNT-SRC) for providing the workstation to make this research work possible to be conducted.

References

[1] Elwell C, *A Practical User Guide to Near Infrared Spectroscopy. 1st edition*, London: Hamatsu Phototonics KK, (1995).
[2] Jöbsis FF (1977), Noninvasive Infrared Monitoring of Cerebral and Myocardial Oxygen Sufficiency and Circulatory Parameters. *Science* 198 (4323), 1264-1267.
[3] Burns & Donald *A, Handbook of Near-infrared Analysis. 3rd edition*, Boca Raton: CRC Press, (2008).
[4] Huong A, Philimon S & Ngu X (2017), Multispectral Imaging of Acute Wound Tissue Oxygenation. *J. Innov. Opt. Health Sci.* 10, 1750004.
[5] Ong P, Huong AK, Hafizah W, Tay K & Philimon SP (2016), Reflectance Spectroscopy System for Noninvasive Prediction of Skin Bilirubin Concentration Related Parameter, *2016 IEEE EMBS Conference in Biomedical Engineering and Sciences* (*IECBES*), 352-355.
[6] Nimmo S & Tucker G, Assessment of the effects of drugs on the peripheral vasculature, *Clinical Measurement in Drug Evaluation*, London: John Wiley & Sons Ltd., (1995), 136-150.
[7] Wright CI & Draijer R (2006), Non-invasive Methods and Stimuli for Evaluating the Skin's Microcirculation. *J Pharmacol Toxicol Methods* 54 (1), 1-25.
[8] Mireille CPVB, Willy NJMC, Ron AW & Baziel GMVE (2001), Performance of near-infrared spectroscopy in measuring Local O_2 consumption and blood flow in skeletal muscle. *J Appl Physiol.* 90(2), 511-519.
[9] Farhanahani Mahmud, Portable Blood Flow Monitor based on Near-Infrared Spectroscopy: An Application of H8/3694F Microcontroller. *Master Thesis of Electrical and Electronic Systems Engineering*, University of Toyama, (2008).
[10] Steen JM, *Optical Methods and Instrumentation in Brain Imaging and Therapy*, Springer Science, (2013), 34-35.
[11] Strangman G, Franceschini MA & Boas DA (2003), Factors Affecting the Accuracy of Near-Infrared Spectroscopy Concentration

Calculations for Focal Changes in Oxygenation Parameters. *NeuroImage* 18, 865-879.
[12] Scholkmann F & Wolf M (2013), General Equation for the Differential pathlength Factor of the Frontal Human Head Depending on Wavelength and Age. *J. Biomed Opt.* 18(10), 105004.
[13] Bakker A, Smith B, Ainslie P & Smith K, Near-Infrared Spectroscopy, *Applied Aspects of Ultrasonography in Humans*, InTechOpen, (2012), 65-74.
[14] Chatel B, Bendahan D & Jue T, Hemoglobin and Myoglobin Contribution to the NIRS Signals in Skeletal Muscle, *Modern Tools of Biophysics. Handbook of Modern Biophysics, vol. 5*, Springer, (2017), 109-117.
[15] Wray et al. (1988), Characterization of the Near Infrared Absorption Spectra of Cytochrome aa3 and Haemoglobin for the Non-Invasive Monitoring of Cerebral Oxygenation. *Biochem. Biophys. Acta.* 933, 184-192.
[16] Chance B (1994), Current State of Methodology on Haemoglobin Oximetry in Tissues. *Adv Exp Med Biol.*, 345, 23-32.
[17] Gibney et al. (2010), Skin and Subcutaneous Adipose Layer in Adults with Diabetes at Sites Used for Insulin Injections: Implications for Needle Length Recommendations. *Current Medical Research & Opinion* 26 (6), 1519-1530.
[18] Elwell MR, Stedman CA, Kovatch RM, Skin and Subcutis, *Pathology of the Fischer Rat. Reference and Atlas*, Academic Press, (1990), 261-277.
[19] Ruckman JS, A Comparative Study of Total Hemoglobin Measurement Technology: Noninvasive Pulse Oximetry and Conventional Methods, *Master Thesis*, University of Connecticut, (2011).
[20] Soldin OP & Mattison DR (2009), Sex Differences in Pharmacokinetics and Pharmacodynamics. *Clin Pharmacokinet.* 48(3), 143-157.
[21] Jamil Mayet & Alun Hughes (2003), Cardiac and Vascular Pathophysiology in Hypertension. *Heart* 89(9), 1104-1109.
[22] Gao Y, *Biology of Vascular Smooth Muscle: Vasoconstriction and Dilatation*, China: Springer, (2017).