*International Journal of Engineering & Technology*, 7 (4.18) (2018) 429-432

International Journal of Engineering & Technology

*Website: www.sciencepubco.com/index.php/IJET*

***Research paper***

# Development of a 4-DOF Robotic Arm: Prototype Design

**Muhammad Farhan Mustaffa, Ruhizan Liza Ahmad Shauri*, Muhammad Izzat Roslan, Muhammad Asyraf Idris**

*Faculty of Electrical Engineering, Universiti Teknologi MARA, 40450, Shah Alam, Selangor, Malaysia*
**Corresponding author E-mail: ruhizan@salam.uitm.edu.my*

## Abstract

This paper discusses the development of a prototype industrial robotic arm. This work is related to the previous project where a seven-degree-of-freedom (DOFs) three fingered robotic hand has been developed for grasping work. However, the working range for the task was just limited to within working range of the robot hand, thus a robot arm is required. The objective of this work was to determine the design of the robot arm's link and joint, components and actuators. The 4-DOF robot arm has four joints to imitate a human upper arm namely joint 1, 2, 3 and 4 that rotate around x, y, and z axes, respectively. The joints move four arm links to get the required posture of the wrist that will be assembled with the hand in future application. The investigation of the components and mechanism was implemented to make sure that they matched in terms of the dimensions and capability to lift the load. DC geared motor with the calculated torque has been selected as the actuators of the four joints. Spur gear was chosen to increase the motor torque by 4:1 ratio due to the unavailability of higher torque low cost motors to lift 2.635 kg of the required payload. 3D mechanical design and simulation using SolidWorks software application were repeated several times to confirm the link-joint motion before the final design proceeds to the fabrication step. Fabricated arm was tested for movement using the control system from a separate study to observe the feasibility of the design. It can be observed that the joints and links were able to move according to their desired positions except joint 1 that is due to the heavy steel material of the spur gears that has caused misalignment of the gears during rotation. Replacing these gears with nylon or ABS material is expected to solve the problem in the next study. Overall, the constructed robot arm proved that the proposed design is able to achieve the design requirements and practically moved in several postures in real time. With minor modification, it will be a good reference for the development of the actual sized arm for the existing hand in the next study.

***Keywords***: *3D mechanical design; geometric structure; human upper arm; prototype robot arm.*

## 1. Introduction

Robot technology is becoming an integral part of the global economy. Innovations in robotic design and application prove the potential of robot technology to change the quality of human lives. The application of robots in industry has been widely expanded to increase productivity and save labour cost. These robots are built with different structures to execute specific task controlled by computer programming to create different robot movements or trajectories in manipulating the products on the assembly line.

The general structures of robot are namely the articulated, Cartesian, cylindrical and spherical types. Articulated is a kind of robot that is capable to rotate its joints on X, Y and Z axes. It is typically applied in automation industry which requires strong arms to lift up heavy payloads and flexible movement of the joints for the end effector to reach large working space. Robots built with the other types of structures have the combination of between revolute and prismatic joints and are being used for different applications depending on the features and capabilities of the robot itself.

In a robot design, the structure and characteristic of a robot depends on its application for work. This will help to decide on the dimension, structure and types of hardware that the robot should have including the limitations that it could bear. A neurorehabilitation wire-based robot [1] for instance is built to assist post stroke patients in their recovering treatment. Three wires that are independently driven by three different motors are connected to the patient's upper limb by means of a splint and supported by a transportable frame. By controlling the wire length, patient needs to follow the arm trajectory set by the therapist through a simple teaching-by-showing procedure.

Meanwhile, some robots are built to be driven by pneumatic actuation [2-3] rather than using electric motors. Pneu-WREX [2] improves the previous Wilmington Robotic Exoskeleton (WREX) device that has limitation in assisting patients for wide range of forces when doing natural movements. Meanwhile, Chen *et al.* [3] proposed a soft manipulator that is built from the design of linear soft actuator which is based on compression and expansion of pneumatic cylinders to rotate the joints. The low-cost actuator was built into the arms of a 6-DOF manipulator for validation test to study the force-pressure behavior between the actuator's cable and supplied air pressure.

A dual-arm exoskeleton robot was used to validate an adaptive impedance control scheme to capture the unknown external forces applied to the first arm that acts as the master to move the second arm as the slave [4]. Smart Portable Rehabilitation Exoskeletal Device also called SPRED is a rehabilitation device that assists therapy treatment of patients with disabled arm. It is developed to be portable, tele-operatable, and has good interfaces for both patients and therapists [5]. Chun-Ta and Hoang-Vuong developed a new stair-climbing robotic wheelchair that could assist disable

**Copyright © 2018 Authors. This is an open access article distributed under the Creative Commons Attribution License, which permits unrestricted use, distribution, and reproduction in any medium, provided the original work is properly cited.**

person to ascend or descend stairs [6]. This type of robot consists of rotational multi-limbed structures that are rotated by epicyclic gear trains. Another rehabilitation robot was developed to integrate an arm support system to an existing lower limb exercise device for cerebral palsy patients [7]. They applied position and force control in order to obtain accurate movement of arm and safe interaction with patients.

In this study, a prototype 4-DOF arm was designed with multiple limbs actuated by individual DC motors. The size of the prototype is made 1.5 times smaller than the actual arm that will later be built for an existing 7-DOF fingered robotic developed in a previous study [8]. The application of this robot is to be used with the hand to assemble small parts in the assembly line within a spherical geometry of the working envelope. The articulated joints are arranged for rotations in the direction of x, y and z axes of the robot coordinates.

## 2. Methodology

The arm development involved two phases which are the investigation of the structure and components, the design and simulation of the arm.

### 2.1. PHASE 1: Investigation of robot components and structure

The structure was first decided based on the intended application. In this case, the robot is required to imitate the posture of a human arm when manipulating small things with their hands while not exceeding 5 DOF to reduce the cost. The reason is because the manipulated object will be small in size and expected to be placed on a table near to where the robot will work. However, the robot joints should be flexible to rotate in three dimensional directions in the robot space.

The n-th joint is counted from the origin O towards the end effector as shown in Figure 1. The joints are labeled as J1, J2, J3 and J4 which rotate around x, y, z and x axes, respectively. Each joint is connected with $l_1$, $l_2$, $l_3$ and $l_4$ to construct a simpler version of human upper arm which is from shoulder to elbow.

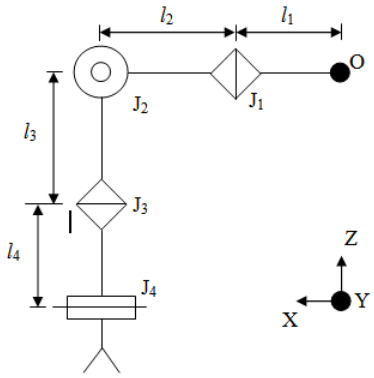


**Fig. 1:** Structure of robot arm

Next, based on the decided robot structure, the dimension of each link and weights of both links and joints were approximated. These were then used to calculate the required payload to calculate the motor torque. Sufficient motor torque is important to make sure that the actuator could lift each link independently. Therefore, the motor torque calculation was used to purchase the type of motor equipped with encoder. Spur gears with different ratios were selected as a mechanism to multiply the motor torque due to the unavailability of sufficient torque and cheaper motor in the market. To work with the gear and motor shaft rotation, suitable size of bearing was selected.

### 2.2. PHASE 2: 3D mechanical design of arm

SolidWorks application software was used to draw the robot arm in 3D view. It is important to set the axis direction at the first place to ensure that all parts are designed related to the correct angle of view. The dimension of the arm needs to consider the size of the actual motor, bearing and gears available in the market as determined in the previous step. The links were designed in different thickness to hold the weight of the DC motor and to be connected to the gear or shaft from the previous motor. Every designed arm part including the motors, bearings and gears must match the dimension of each other to ensure that the torque from motor can be transferred efficiently. Example of the sketch for the first link is shown in the following Figure 2.

When the design is completed, all parts were assembled through matching processes for simulation to confirm the feasibility of rotation by each joint. In the case where the result does not fulfill the design requirement, redesign of the affected part has been carried out. Once the simulation is satisfied, the arm design was sent for fabrication.

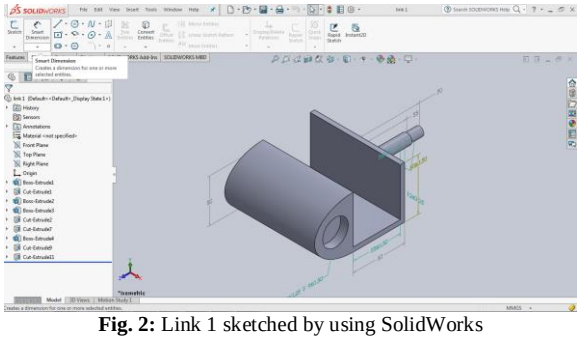

**Fig. 2:** Link 1 sketched by using SolidWorks

## 3. Results and Discussion

### 3.1. Selection of motor torque

Table 1 shows the selected type of DC motors according to the design requirement in terms of dimension and rated torque. Planetary gear was embedded inside these motors to gain the torque and speed. Based on the total weight of links, joints, components and length of links, the required torque must be not less than 6.458Nm. However, since the torque of IG42E is just 1.96Nm, gear ratio of 4:1 was selected to multiply the torque to 7.84Nm. Similarly, suitable gear ratio was selected for joint 2 to achieve the required torque of 3.92 Nm.

**Table 1:** DC Geared Motor Specification

| Model of DC Motor |  IG42E – 104K |  IG32E – 100K |
|---|---|---|
| Voltage (VDC) | 12 | 12 |
| Rated Torque (N.m) | 1.96 | 0.66 |
| Rated Speed (RPM) | 63 | 60 |
| Rated Current (mA) | 5500 | 900 |
| Weight (g) | 360 | 267 |
| Shaft (dia x *l*) (mm) | 8 x 20 | 6 x 16.3 |
| Dimension (*w x l x h*) (mm) | 45 x 45 x 131.9 | 32 x 32 x 103.3 |

### 3.2. 3D mechanical design and fabricated arm

The robotic arm has 4 links that are connected to separate joints for the rotation around x, y, z and x axes, respectively. Figure 3 shows the design of all four links. The parts have been successfully mated and simulation results confirmed the working range of each link followed the requirement by user where all joints were

able to rotate according to their respective axes related to the robot coordinates.

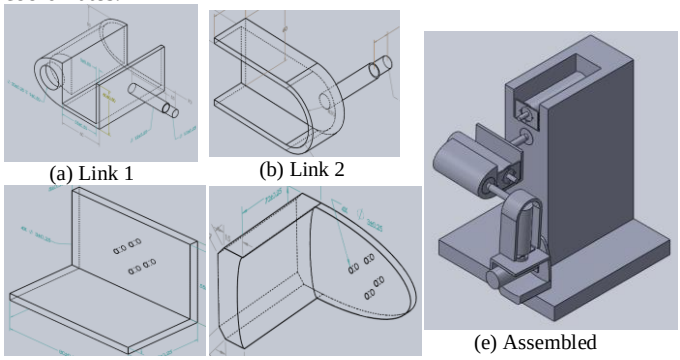

(a) Link 1 (b) Link 2 (c) Link 3 (d) Link 4 (e) Assembled

**Fig. 3:** Robot design on SolidWorks

Next, the confirmed design was used to fabricate the arm by FDM technology using Acrylonitrile Butadiene Styrene (ABS) material due to similar light weight but lower cost compared to Nylon. Figure 4 shows the fabricated links of the arm.

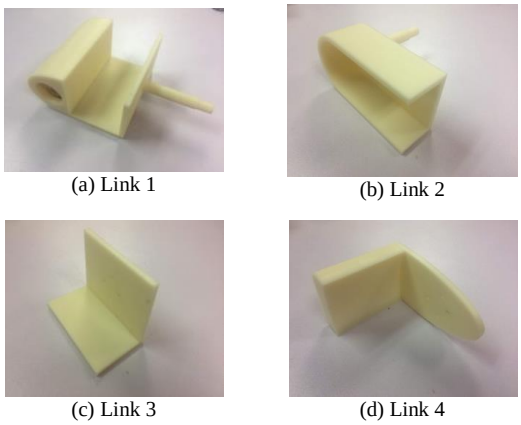

(a) Link 1 (b) Link 2 (c) Link 3 (d) Link 4

**Fig. 4:** Fabricated link

Together with the fabricated links and all joints' components consisting of the DC geared motors, spur gears, metal key hubs and brackets, the assembled arm is shown in Figure 5. In this figure, the arm is positioned at its initial posture.

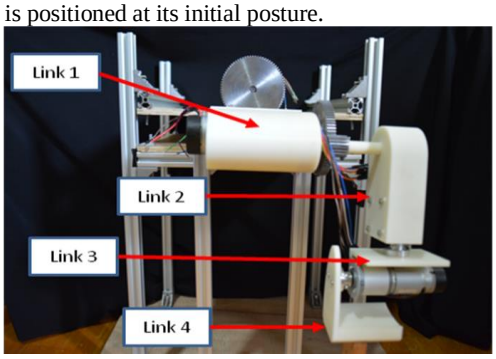


**Fig. 5:** Assembled robotic arm

Consequently, the assembled robot was tested in a real-time experiment to observe the movement of all links and joints as shown in Figure 6. The motors of joint 1 and 2 were directed 90° position while the motors of joint 3 and 4 were directed to 180° position. They were moved from the initial position to the desired position and after few seconds returned to their initial position. The position transient response of the motor is shown in Figure 7. The feedback control study which was implemented in a separate work used PID to make sure that the motor tracks the desired positions at all time. From the figure, it can be observed that all motors were able to move according to the desired positions (indicated by blue lines) as measured by encoders for the actual response indicated in red lines.

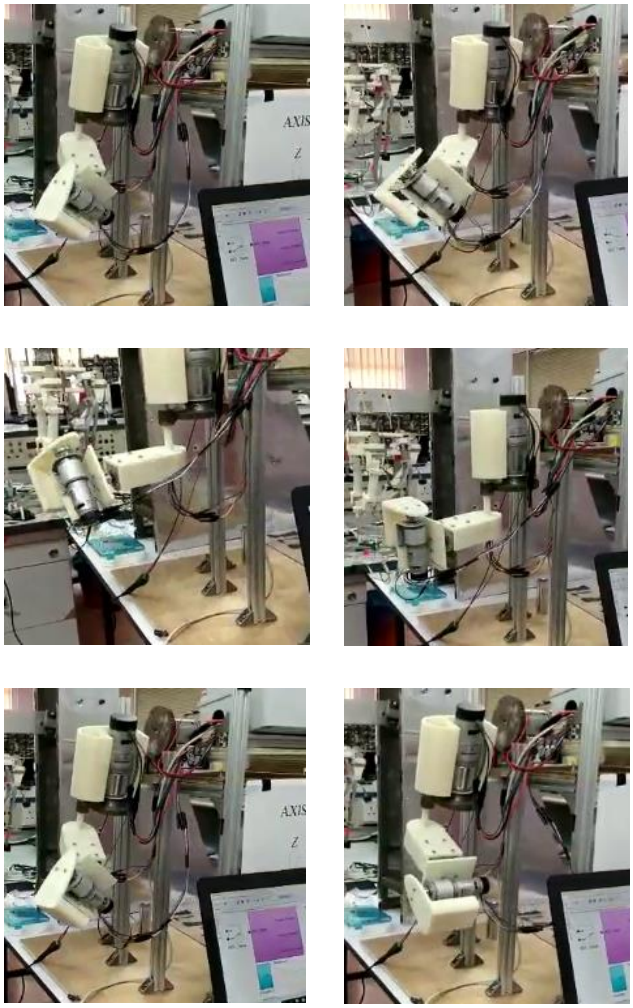

**Fig. 6:** Real-time testing for joint rotation

However, for concurrent movement of the joints, it can be observed that joint 1 has faced misalignment in its rotation that resulted to error in its position. This is due to the unsuitable arrangement of the gears and bearing bracket which only allowed the vertical placement of the gears. This is worsened by the heavy steel material of gears which caused high gravitational load applied to the rotating gear that failed the rotation. Furthermore, vibration of the links can be observed when all joints moved concurrently due to inertia of the arm body. Further modifications on the joint design will be required to remove unnecessary gaps.

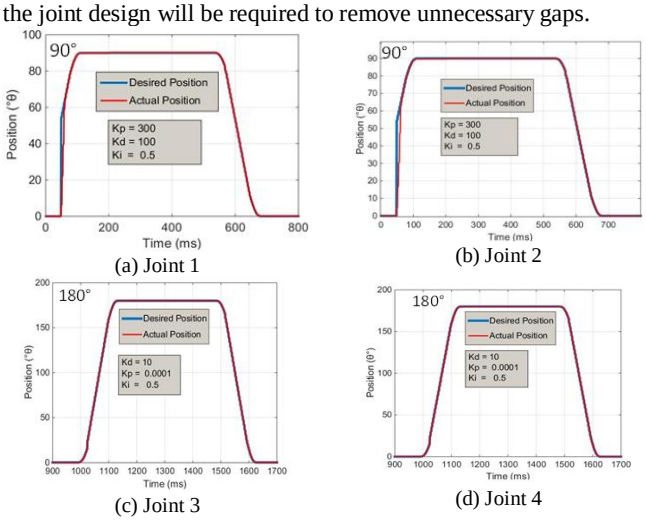


(a) Joint 1 (b) Joint 2 (c) Joint 3 (d) Joint 4

**Fig. 7:** Transient response of each joint

## 4. Conclusion

In developing a robot design, it is important to determine the structure of the robot, the type of actuator based on the required payload, the mechanism for the joints, and the type of material according to the intended application required by user. In this study, a 4-DOF prototype robot arm was developed to imitate a human upper arm which is from the shoulder to elbow. The selected DC motor and its mechanism have successfully moved all joints according to their desired position except joint 1 due to the mechanical problem caused by the unsuitable placement of the gear and the bearing bracket. Therefore, the design needs further corrections to make space for the bearing and gears placement, change of gear material and slight modifications of the joint design in the next study.

## Acknowledgement

This research was supported by Research Management Centre (RMC) and Faculty of Electrical Engineering, Universiti Teknologi MARA, Malaysia through LESTARI Grant (600-IRMI/MyRA 5/3/LESTARI (080/2017)).

## References

[1] G. Rosati, P. Gallina and S. Masiero. "Design, Implementation and Clinical Tests of a Wire-Based Robot for Neurorehabilitation', *IEEE Transactions on Neural Systems and Rehabilitation Engineering*, Vol.15 (2007), pp. 560-569.

[2] R. J. Sanchez, Jr. E. Woldrecht, R. Smith, J. Liu, S. Rao, S. Cramer, T. Rahman, J. E. Bobrow, D. J. Reinkensmeyer. "A Pneumatic Robot for Re-Training Arm Movement after Stroke: Rationale and Mechanical Design", *Proceedings of the 9th International Conference on Rehabilitation Robotics*, 2005, pp. 500-504.

[3] X. Chen, J. Peng, J. Zhou, Y. Chen, M.Y. Wang and Z. Wang, "A robotic manipulator design with novel soft actuators," *Proceedings of the 2017 IEEE International Conference on Robotics and Automation (ICRA)*, 2017, pp. 1878-1884.

[4] B. Huang, Z. Li, X. Wu, A. Ajoudani, A. Bicchi and J. Liu, "Coordination Control of a Dual-Arm Exoskeleton Robot Using Human Impedance Transfer Skills," *IEEE Transactions on Systems, Man, and Cybernetics: Systems*, pp. 1-10, 2017.

[5] D. Y. Kim, J. H. Kim, M. Prabakar and Youngjin Jung. "*Design of Smart Portable Rehabilitation Exoskeletal Device for Upper Limb". Proceedings of the* 32nd Southern Biomedical Engineering Conference, 2016.

[6] C. Chun-Ta and P. Hoang-Vuong, "Enhanced development and stability analysis of a new stair-climbing robotic wheelchair," *2008 IEEE Workshop on Advanced robotics and Its Social Impacts*, 2008, pp. 1-6.

[7] A. Koenig, U. Keller, K. Pfluger, A. Meyer-Heim and R. Riener. "PASCAL: Pediatric Arm Support Robot for Combined Arm and Leg Training". *Proceedings of the* IEEE International Conference on Biomedical Robotics and Biomechatronics (BioRob) 2012.

[8] J. Jaafar and R. L. A. Shauri, "Three-fingered robot hand for assembly works," *Proceedings of the 2013 IEEE 3rd International Conference on System Engineering and Technology (ICSET)*, 2013, pp. 237-241.