International Journal of Engineering &Technology, 7 (4.24) (2018) 115-118

SPC

International Journal of Engineering & Technology

Website: www.sciencepubco.com/index.php/IJET

Research paper



A Review on Regulation of Hybrid Solar Photovoltaic and Wind Drive Coordination

P. Pothuraju[1]*, M. Venkatesan[2]

[1] *Research Scholar, Department of Electrical and Electronics Engineering, VFSTR University, Vadlamudi, Guntur, India*
[2] *M. Venkatesan, Associate professor, Department of Electrical and Electronics Engineering, VLITS, Vadlamudi, Guntur, India.*
**Corresponding author E-mail:pothuraju4307@gmail.com*

Abstract

Now a days electrical energy is essential to social development and for the economic growth of any country. Majorly the world facing the power generation problem. The fossil fuel sourcesare limited and needed to use properly. This huge power generation increases the green house effect. Hence to overcome this effect, prefer combined operation of Solar Photovoltaic (SPV) and Wind power generation systems. Due to high penetration of SPV and wind systems in presen tenergy schememighteffectand form many practical issuesparticularly to individual systems and weak grids, with lack of control and ample loading capability. Hence,incorporating both SPV and wind energy systems to form an optimal arrangement, the effect offlexible nature of wind as well as solar energy can partlydeterminedbesides the whole arrangementsuits more efficient and reliable to operation.This paper presents the exploration on control schemes of combined SPV and wind driveincorporationarrangements. Energy, incidence oscillations and harmonics are significant power quality disputes for grid mode as well as standalone arrangements having hugeeffect in weak networks. Thus can be determined to a hugelevel by having suitable arrangement, innovative reaction techniques with energy storage arrangement and good optimization of both grid onnected and standalone ,hybrid SPV and wind energy systems.

Keywords: *Solar Photo Voltaic system (SPV); Renewable Energy Sources (RES; Maximum Power Point Tracking (MPPT; Perturb and Observation (P&O); Hybrid Energy Storage System (HESS).*

1. Introduction

Due to rapid growing of population, rapid increasing of industrialization, people desire for more comforts, which bases the demand for electrical energy usage. To reach this demand of our daily requirements of human usage, people go for conventional power generation sources, like coal, water,diesel, nuclear fuels, and natural gas etc. Hence, the usage of these fossil fuels increased more and more due to the abundant quantity of reserves available in nature, hence drastic increase of conventional power generation usage, this leads to huge burden on the past arrangement. Moreover rapid use of fossil fuels concern harmful pollution to the environment, thus create complex disputes .To overcome these drawbacks of conventional fuels, mankind's focused the alertness towards RES, especially Wind, Solar Photovoltaic (SPV), Tidal, Fuel cell stack are widely used to enhance the increasing need of electricity generation [1-6]. Among these resources, Wind and Solar PV has emerged as common resources, as they are cheap and clean, which are free from pollution, actually they do not require any fuel cost(unlike fuel cell stack)

2. Solar PV Energy

In general the solar power is naturally available resource and abundant quantity is available in universe. This power is directly obtained the by the sun and captured by the earth is nearly 1.8×1010 MW, this energy is thousands of times more than the existing amount of energy consumption in the earth. This solar energy could meet all the present and future needs of the world on a continuous basis, which is the most promising renewable energy sources and it is environmentally clean source, which is available almost all parts of the world. Photovoltaic synthesis is applied to transform sun light energy into electrical energy. It has many advantages of pollution free, noise less as well as no wearing effect due to the absence of moving parts, environmentally benign operation and can be suitable for remote applications. Photovoltaic (PV) systems are prominently suitable for remote areas, where there is no grid power supply availability. Space programmers also have proved the technical feasibility of photovoltaic systems, because of its reliability and high performance.

Solar PV generation gains an improved significance as a renewable energy source owing to innate benefits, like no fuel cost, fuel supply problem, reliability of supply with little or no maintenance cost, reliability and performance of Solar PV systems have been demonstrated in a large variety of small and medium scale standalone applications as well as MW grid connected power stations. Main obstacle for using multi MW scale Solar PV system is very high initial cost of the module. The SPV systems may be operate in numerous modes such as standalone system by storage battery unit or without storage battery unit, Hybrid mode and grid connected type in accordance with several applications [5-10]. Main aim of SPV system design process is to get the desire size of PV array and the energy storage based battery bank, thus can supply energy to various consumers without any load interruption. Operation of the SPV system influenced by the availability of radiant energy in the site. Input energy for SPV system is the inci-

Copyright © 2018 Authors. This is an open access article distributed under the Creative Commons Attribution License, which permits unrestricted use, distribution, and reproduction in any medium, provided the original work is properly cited.

dent solar radiation, which depends on the PV panel location, atmospheric conditions.

3. Wind Energy

Now-a-days wind power plays a dynamic part in electrical energy production, which gives better solution for world energy demand and pollution problems. The regular gust velocity is estimated nearly 7.1 m/s, annual wind production is almost estimated. This produces 60,000 million Kwh of electricity, enough to supply 20,000 households with clean energy. Wind turbine eludes discharging the environment, 50,000 tons of Co2, 200 tons of So2 and 2500 tons of ash as a consequence of operating Coal fired Thermal power plants, to create equal sum of power. Hence Wind energy is considered as most prominent Renewable energy source for electricity generation. In the immediate future technology used for Wind power generation is matured.

Ultimately gust power generation be subject to the velocity of breeze and swept area. Output power varies with the climate conditions also [4-9].In India wind velocity majorly depends on the monsoon circulation. The conservative potential of wind energy is estimated about 60,000 MW.

4. Hybrid System

Due to the abundant nature and rapid increase of energy usage, people prefer renewable energy sources of solar photovoltaic and wind systems for electric power generation. Proposed system generates large amount of power to meet various loads of desired applications. If each system operates individually, they can't produce continuous power during entire period of operation, also can't generate more power, due to the oscillations of weather conditions. Hence to enhance the continuous power supply and huge power applications, integrate both wind and SPV energy systems [10-15]. Owing to irregular environment of lunar irradiance also gust oscillations, existed arrangement cannot produce continuous power, hence proposed system is implemented with battery bank storage unit. In such a manner Hybrid wind and SPV system is arranged.

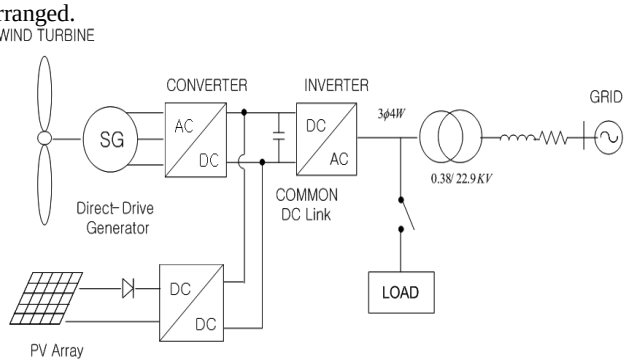

Fig.1: Hybrid Wind and SPV Energy System

5. Literature Review on Hybrid Solar Photovoltaic and Wind Energy System Control

Many Researchers approved the Gust and SPV Energy system, by proper utilization of these Renewable energy sources and implement various control schemes to enhance the desire system for obtaining the required load demand. The literature survey is carried out on different categories of Standalone systems as well as grid connected systems.

In 1987 A Greece author J. Chadjivassiliadis have designed the First Standalone Wind power plant with the generation of 100 KW as well as Solar PV plant with the storage capacity of 100 KW, 50 KW for the Islands of Greece, which are Grid connected and obtained the best performance by utilizing the available local energy resources. By installing these plants author had gained the much experience of designing, implementation and demonstration of some projects related to the existed data [1]. This will help to produce large scale power generation in a cost effective manner for islands of the Greece. Further these data is utilized to design coordinated Gust and SPV generation systems.

In 1991 J. H. R.Enslin and D. B. Snyman et al.have proposed the novel Standalone PV system by introducing a novel method of Maximum Power Point Tracking (MPPT) having three major roles of battery control, inverting mode and MPPT operation. Battery backup integrated with PV system gives cost effective model. The inverter receives power from battery bank then it transforms to Ac power, which is close to desired load, and proposed model works at high voltage PV array with low voltage batteries. The proposed inverter obtained the better results theoretically and it is compared with the practical model of prototype which given the better results and control [2].

In 1995 K.H. Hussein et al. have proposed Maximum Power Operating Point (MPOP) of Solar PV generation systems, generally the Solar PV systems operation changes by the variation of atmospheric conditions, like solar radiation and temperature. To enhance the efficient PV system the MPOP technique should be consider correctly in the designing structure of the given system. In the past days, Maximum Power Tracking (MPT) techniques have been implemented by using Microprocessor with appropriate MPT algorithms and it gives high efficiencies. But these systems have less efficiency due to the rapid changes of atmospheric conditions. Hence this drawback can be overcome by using new MPT process technique then MPOP of SPV generation system track the maximum power accurately and finally compared with the growing and instant conductance of the solar panel. Finally the developed system has higher efficiency, when compared to the conventional design structure of the given PV array [3].

Table1: Efficiency comparison between the MPT algorithms

S. No.	MPT algorithm	Efficiency
1	Without MPT	31.3%
2	P&O	81.5%
3	Incremental conductance	89.9%

B.S. Borowy and Z.M. Salamehin 1996 have developed an approach for optimal measurement of Battery unit and Photovoltaic (PV) module for standalone, combined Gust and SPV systems. To obtain this methodology, a long term of 30 years of data was taken for each hour of the day. By using this data, normal power produced by wind and PV unit was taken for each hour of a distinctive day of a month and practically it had applied to one typical house of Massachusetts. By using this proposed topology we can calculate the combination of quantity of PV modules and number of battery-units, such calculation is mainly based on the Loss of Power Supply Probability (LPSP) theory [4].Main aim of this technique is to obtain the lowest price of the desired scheme. From LPSP concept we can observed that LPSP has the result of zero value load always satisfied, but LPSP has the result of one indicates, load never be satisfied.

In 1998 K. Ro and S. Rahman have proposed a novel dual loop control scheme for the improvement of performance of the hybrid PV and Fuel-Cell (FC) system arrangement. In general the photovoltaic system experiences poor efficiency during temperature variations of climate changes to overcome the drawbacks of the SPV system, it is included with Fuel- cell backup to meet required load conditions satisfactorily. Such system can be controlled with two loops mainly. One loop is neural network based controller, used for MPPT control arrangement, this collects extreme amount of power from the PV panels during the fluctuating environments of insolation, hotness and load of the desired system etc. second loop is nothing but Real and Reactive Power control loop (RRPC). RRPC attains the desire system necessities reactive and real power by regulating the input energy of the fuel cell loads and regulate the switching indicators of a power conditioning subsystems [5].

In 2000, F. Valenclaga et al. have proposed the novel control scheme of flexible arrangement for hybrid power system. Designed configuration is mainly proposed for adjustable load conditions and it comprises of photovoltaic, wind generation and a battery bank. In this methodology, controller design is the first step; this methodology improves the active model of propeller position. This control regulation is planned by the grouping of Sliding mode as well as Passivity procedures. The main intention of this makes to regulate the process of the Gust system, to balance the PV generation, thus in such a way desirable power is obtained [6].

In 2003 F. Valenciaga et al. have proposed the Sliding mode/Passivity approach of power control for stand-alone Wind/Solar generation system without Wind measurement. This control scheme regulates the generation of both subsystems of wind, photovoltaic systems and battery charger to satisfy the desire demand circumstances. Controller is designed such that by means of a theoretical frame work that merges passivity and sliding method techniques. In this arrangement, proposed control strategy does not calculate gust capacity and depends on current measurement and rotational speed only. Researchers also proposed a security extent to recompense its possessions by the analysis of acceleration approximation fault[7]. F.Valenciaga and P. F.Puelston in 2005 have proposed the Superior regulation scheme for Individual Hybrid generation system by using Gust and SPV energy, Connected with a storage unit of battery bank fed to ac load. Main objectives of the supervisor control scheme perform two functions. One is to fulfill the require load demand, other one is to conserve the state of control to the battery bank to avoid shutdown as well as prolong lifespan of storage units. Hence, to achieve the above functions, proposed control scheme defines the online process of two energy subsystems, switching operation takes from power regulation to determined power transformation. Result of the regulator scheme depends on computable method variables [8].

In 2006 S. K. Kim et al. have proposed the power control strategy for a grid- coupled Hybrid Gust and SPV energy system. Proposed system comprises of a Solar PV panel, dc-dc converter, variable-speed wind generator, wind side converter and grid interface inverter. To keep the quality power at a reasonable level, collect the extreme energy offered during fluctuating state of solar irradiance and wind speed. MPPT technique is applied for photovoltaic system as well as variable speed mechanism is applied for gust drive to release the extreme power. Constant dc voltage is maintained by interfacing of inverter to the grid arrangement [9]. In 2008 S. K. Kim et al. have proposed the versatile power control scheme of Hybrid energy system connected to grid arrangement. Proposed system implies the combination of wind drive, photovoltaic system, also energy storing unit of battery bank through a mutual dc link. Researchers also proved that proposed system operates in several modes. During normal conditions, hybrid system is not associate with battery unit. Whereas, in abnormal conditions, hybrid system is associated with battery unit, and also operates in individual mode of each system, to meet the require load conditions.[10].

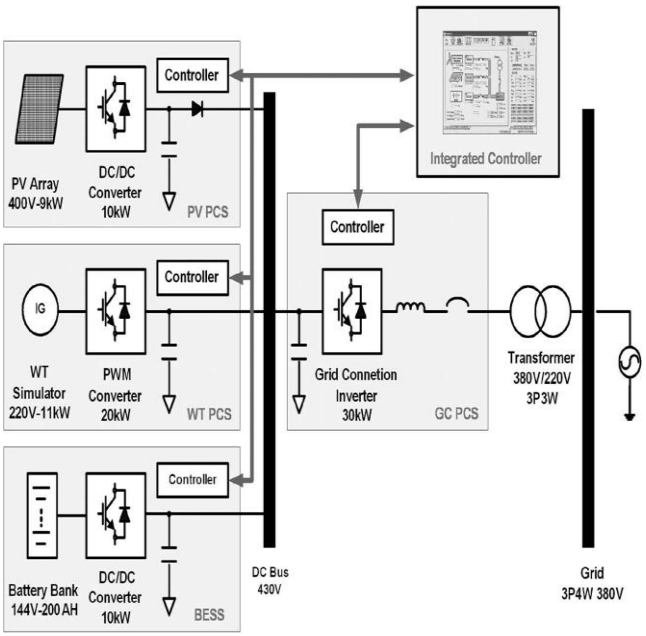

Fig.2: Configuration of the Hybrid Energy control system

In 2011 W. Qi et al. have developed a supervisory predictive control technique for hybrid standalone SPV and wind energy systems, also having optimal energy management strategy. Designed control scheme calculates the control orientations of SPV and Wind systems at each sample time, to minimize the appropriate price task. Control locations are referred to two local regulators; also drive the two subsystems to the needed control orientations. Researchers also developed the lifespan of each subsystem via falling the highest values of inrush currents [11].

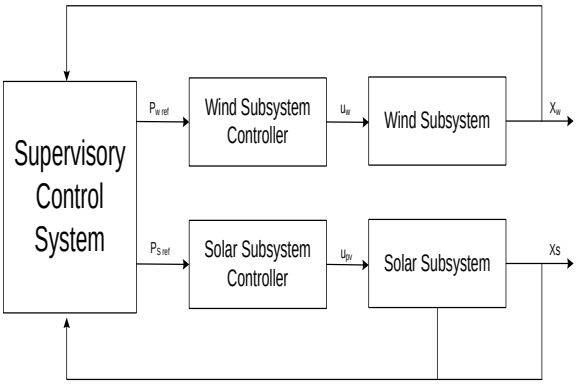

Fig.3: Supervisory Regulation of hybrid wind and solar energy systems

A. Parida and D. Chatterjee in 2016have proposed the loss minimization control scheme for hybrid gust and SPV energy systems by using Doubly Fed Induction Generator (DFIG). Proposed scheme has optimal rotor current regulatory approach for minimizing the losses in induction generator. It also aims that maintains the continuous power supply, by integration of a photovoltaic unit with battery bank unit. Researchers also proved that avoid the interruption of continuous power supply, by integrating both energy systems of gust and SPV with battery bank [12]. In 2017 A. Rizvan et al. have proposed the intelligent control scheme for hybrid generation system having wind and SPV energy systems. For stable and reliable operation of hybrid gust and SPV system, a novel control of hybrid fuzzy-neural MPPT method is employed to SPV arrangement. Similarly gust control is obtained by using Radial Basis Function Network Sliding Mode (RBFNSM). Thus obtains a robustness, good performance and fast response for the proposed system [13].

In 2018 L. Wang et al. have proposed the constancy development of a multi device power system linked through a significant Hybrid Solar PV and wind gust with stored energy unit based on Super capacitor (SC). PV unit as well as gust drive arrangement are coupled to a mutual dc-link through a voltage source converter and a dc-dc boost converter individually. Power of mutual dc-link is conveyed to multi device power system via voltage-source inverter, step-up transformers, and connection line. SC unit is connected to the common dc link for leveling out the power oscillations owing towards deviations of solar irradiance and gust speediness. Proportional Integral Derivative (PID) type Supplementary Damping Controller (PID-SDC) is considered to the bidirectional dc-dc converter of SC unit to improve the damping features of low frequency alternations allied through deliberate multi device power system [14]. U. Akram and M. Khalid in 2018 have proposed the frame work for Frequency Regulation (FR), by innovative design of Battery Energy Storage System (BESS) and Hybrid Energy Storage System (HESS) with Ultracapacitor based unit .Replacement of conventional power generation by Solar PV panels and wind turbines marked the reduced system inertia. Researchers also Proved that proposed framework of system operation distributes power to BESS and HESS, based on their maximum power ratings to fulfill constraints at the same time. Finally researchers concluded that 1) HESS applicable to Frequency regulation (FR) and 2) BESS also applicable to FR, comparative analysis results that HESS is more economical than BESS [15].

Table 2: Research development in Hybrid Wind and SPV Energy system control

S. No	Hybrid Wind and SPV control
1	Proposed technique controls the rotor reference frame of dynamic arrangement; controlling mechanism is obtained by the grouping of sliding as well as passivity mode. Main theme is to regulate the action of wind subsystem instead of SPV generation during abnormal environments of solar power generation. Thus in such a way desire power is achieved. In case of gust scarce occurs, proposed control scheme is adjusted and the controller objective attains maximum power[6].
2	Improved the quality of power to a satisfactory level, also extract the maximum conceivable energy in fluctuating circumstances of planetary irradiance and gust speediness. MPPT methodology is applied for photovoltaic arrangement, besides variable speediness control is employed for wind turbine to collect extreme power [9].
3	Proposed the loss minimization model based control scheme for combined gust and SPV systems via DFIG. Developed optimal propeller current governor approach is considered to minimize the losses of induction generator through whole period of operation [12].
4	Obtained the permanence upgrading of multi device power coordination coupled to a comprehensive combined SPV and gust form with energy storage element via super capacitor (SC) unit. PV array and wind turbine generator (WTG) are coupled to a common dc link via voltage source converter (VSC) and a dc-dc boost converter respectively. SC built energy storage unit is added to the dc-link via bidirectional dc-dc converter for flattening out the power instabilities owing to differences of solar irradiance as well as gust speediness [14].

6. Conclusions

Combined use of natural dynamism resources, like solar as well as gust drive systems deliver power to standalone systems and grid mode, as improves the power balancing, eco-friendly power generation, reduces the transmission losses, no fuel cost of operation and no greenhouse effect, instead of conventional sources of coal, natural gas and crude oil reserves. But integration of these RES seems to be several issues for high penetration of energy generation during sudden climate deviations of solar irradiance and wind form fluctuations. Hence, sufficient power is not produced

This problem can be solved by adding extra energy storage unit to the existed system of operation. Finally proposed system can be implemented by using Battery Energy Storage System with Super capacitor unit and apply supervisory control techniques to the existed hybrid system. In such a way that, the hybrid energy storage system can be designed, controlled with proper energy management methodology during weak grid mode as well as standalone mode of operation.

References

[1] J. Chadjivassiliadis, "Solar Photovoltaic and wind power in Greece", IEEE proceedings A-Physical Science, Measurement and Instrumentation, Management and Education-Reviews, vol: 134, Issue:5, pp. 457-463, 1987

[2] J. H. R. Enslin; D. B. Snymam, "Combined low-cost, high efficient inverter, peak power tracker and regulator for PV applications", IEEE Transactions on Power Electronics vol:6, Issue: 1, pp. 73-82, 1991

[3] K. H. Husein, I. MUTA, j. Hoshino and M. Osakada "Maximum photovoltaic power tracking: an algorithm for rapidly changing atmospheric conditions" IEEE proceedings-Generation, Transmission and Distribution, vol: 142, issue: 1, pp. 59-64, 1995.

[4] B. S. Borowy and Z. M. Salameh "Methodology for optimally sizing thecombination of a Battery bank and pv array in a wind/pv Hybrid system" , IEEE Transactions on Energy conversion , vol:11, no:2, june-1996.

[5] K. Ro and S. Rahman "Two loop controller for maximizing performance of a grid-connected photovoltaic-fuel cell hybrid power plant", IEEE Transactions on Energy conversion vol: 13, issue:3, sep-1998

[6] F.Valenciaga,P.F.Puleston, P.E. Battaiotto and R. J. Mantz "passivity/sliding mode control of a stand-alone hybrid generation system" , IEE proceedings-control theory applications, vol: 147, issue:6, pp.: 680-686, 2000.

[7] F. Valenciaga, P.F. Puleston, P.E. Battaiotto and R. J. Mantz " power control of a Solar/Wind generation system without wind Measurement " A passivity/sliding mode approach" , IEEE Transactions on energy conversion vol:18, no:4, Dec-2003.

[8] F. Valenciaga and P. F. Puleston "Supervisor control for a standalone hybrid generation system using wind and photovoltaic energy", IEEE Transactions on Energy Conversion, vol: 20, Issue: 2, pp. 398-405, 2005.

[9] S. K. KIM, E. S. KIM, and J.B. Ahn "Modeling and control of a grid connected wind/pv Hybrid generation system" IEEE/PES Transmission and Distribution conference and exhibition", pp. 1202-1207, 2006.

[10] S. K. KIM, J. H. Jeon, C. H. Cho, J. B. Ahn and S. H. Kwon, "Dynamic Modeling and Control of a Grid Connected Hybrid Generation system with versatile power transfer", IEEE Transactions on Industrial Electronics vol: 55, issue 4, pp. 1677-1688, 2008.

[11] W. Qi, J. Liu, X. Chen and P. D. Christofides, "Supervisory Predictive Control of Standalone wind/solar energy generation systems", IEEE Transactions on Control Systems technology, vol: 19, issue: 1, pp. 199-207, 2011.

[12] Pariada and D. Chatterjee "Model-based loss minimization scheme for wind and solar hybrid generation systems causing doubly fed induction generator", IET Electric Power Applications vol: 10 issues: 6, pp. 548-559, 2016.

[13] A.Rezvani, A.Esmaeily, H. Etaati and M.Mohammadinodoushan "Intelligent hybrid power generation system using new hybrid-fuzzy-neural for photovoltaic system and RBFNSM for wind turbine in the grid connected mode Research article 2017.

[14] Li Wang, Q. S. Voand A. V. Prokhorov, "Stability Improvement of a Multimachine Power System Connected with a Large-Scale Hybrid Wind-Photovoltaic Farm Using a Supercapacitor", IEEE Transactions on industry applications, vol: 54, issue: 1, 2018.

[15] U. Akram and M. Khalid, "A Coordinated Frequency Regulation, Frame work based on Hybrid Battery-Ultra Capacitor Energy storage technologies", IEEE Access, vol: 6, pp. 7310-7320, 2018.