International Journal of Engineering &Technology, 7 (4.24) (2018) 108-110

SPC

International Journal of Engineering & Technology

Website: www.sciencepubco.com/index.php/IJET

Research paper



Design and Implementation of High Efficient Single Phase Transformer Less Inverter for Grid Connected Solar Photovoltaic Energy System

Attuluri R.Vijay Babu[1] , K. Suresh[2], Pillutla Murali Krishna[3]*, Shaik Ashfaq Hussain[4]

Department of Electrical and Electronics Engineering, Vignan's Foundation for Science, Technology and Research, Guntur, Andhra Pradesh, India-522213.
**Corresponding author E-mail: pillutlamurali12@gmail.com*

Abstract

Solar energy is the most available energy among all the renewable energies, and the available range is almost 86000 TW. The global overall demand is 15TW, so only three hours production of electrical energy from solar is enough to compensate the power demand for a complete year.Clean and green environments are very much help for living things, non-renewable energy productions creates environmental pollution. Stand-alone system with renewable energy might be facing power failure and also effective utilizations also not possible. Excess power should be export to grid and whenever the power shortage which is compensates by import power from grid, and then only effective utilization is possible. This paper deals with the investigations on transformer less inverter topologies and control strategies for grid connected PV system. The proposed work has high efficient single phase transformer less inverter which is controlled by PIC 16F877. This arrangement has an advantage of reliability and high level of efficiency.

Keywords**:** *solar energy; inverter; micro controller; transformer less converter; reliability*

1. Introduction

Grid connected solar Photovoltaic (PV) system installation required land for installation, solar PV modules with converter circuits, storage device batteries and other supporting accessories [1]. Initial installations required good planning, which is very much helpful for production as well as commercial. The existing commercial PV applications contains transformer with inverter, which is isolates the solar panel from grid. This type of transformer may be line frequency or high frequency transformer, which are suitable for this application. The main drawbacks of line frequency transformers are cost, weight and size. This huge size of transformer will add with converter circuits, which leads to be complex in power stages.

Transformer less concept has some advantages such as efficiency, less design complexity and less weight. The peak efficiency of transformer less converter circuits is 95-98 %. In this topology requires earth parasitic capacitance of PV panel, which inject capacitive ground current and potential difference between solar panel and earth. A part of resonance circuit is capacitance which filters the ripples present in the potential. The overall circuit consist of PV panel, ac filter element capacitor and grid impedance. The overall optimization provides small level of damping, helps to reach permissible level of amplitude and high efficiency. Also, it provides variable resonant frequency, which is depends on the environmental condition and condition of ground capacitance. The topology design only decides ground current level, distortions in grid current, system losses and electromagnetic interference.

2. Inverter Design

An impedance network of unique property coupled between converter circuit and power source, it consist of split inductors capacitors connected in the circuit. The output voltage may either buck or boost based on the unique property of impedance network, it also gives the unique property that may not be getting in an inverter of conventional power. Pulse width modulation method of control is generally employed in the inverter controlling operations [2]. The control has six states of switching also called an active vectors, the DC voltage across load is impressed and zero null states vectors are shorted across the output terminals in three devices of above or below. The PWM control and all switching states and the combination may be spawning. The switches of inverter in other hand side are undefined in the other voltage source inverter conventionally, same switches in a leg will not turn-on same time, it will happen there will be short circuit occur this will spoil the inverter. A proposed inverter has advantages of utilization state of boost both above and below switches in a leg available in dc bus voltage [3]. This inverter greatly improved it increase the reliable and it cannot runaway the circuit due to misgating. Thus it provides high-efficiency, reliable and low-cost, boost and buck power conversion single stage structure. The duty ratio of a control using shoot through control and the principle of operation using step-up control method are proposed.

Copyright © 2018 Authors. This is an open access article distributed under the Creative Commons Attribution License, which permits unrestricted use, distribution, and reproduction in any medium, provided the original work is properly cited.

3. Proposed Topology

A highly efficient single-phase circuit composed of a single-stage is proposed. The basic idea behind it is to associate two parallel step-down converters with the output connected to the load using opposite polarities.

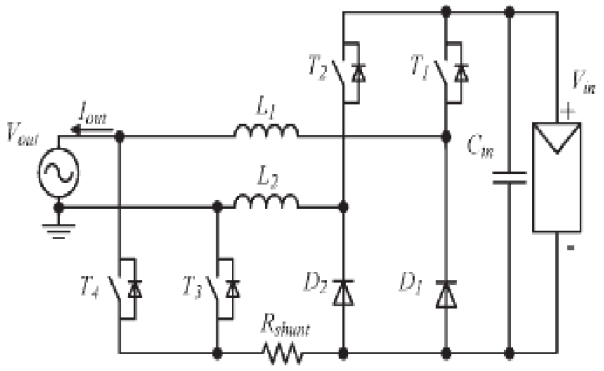

Fig. 1: Proposed inverter circuit

The conventional sinusoidal PWM with control duty cycle control apply through reference signals and peak value of three phase sinusoidal in the simple boost control method. High frequency triangular carriers of two signals are compared and produce upper straight line and below straight line envelopes. Voltage stress across the switch in this method will be high; because of this limitation the voltage gain is reduced. During switch through all the switching losses are high.

The second method of constant step-up or boost control is same to conventional carrier-based pulse width modulation control method. This method of control is maintaining unchanged six active states. The shoot through states circuit is in the comparison between curve of the reference and triangular carrier wave, whether it's maximum or minimum than reference. It reduces the voltage stress in the switches and turns all the zero states. The duty cycle is to adjust in each cycle in will increase the inductor ripple current. The current ripple becomes significant and large inductor reduces the output frequency. The advantage of it is reducing the cost and circuit size. The modulation index range increased due to third harmonics injection. The proposed inverter is shown in the figure 1. For line current limiting inner loop is using and to it produce required waveform. The PI controller processed the voltage error and resulting its limited the voltage command and stator current command is transformed. The PI controller generated by the current command [4]. The PID controller derivative component during operation it introduces surplus noise, hence for control operation PI controllers has been used. For getting maximum boost voltage in step-up or boost control method it minimizes the modulation index. These minimum modulation indexes increase the voltage stress. V_1 to V_6 are active and V_0 to V_7 are null vectors. T_s = sampling interval, during the time interval T_1 and T_2 the applied voltages are V_i and V_i+1and null vectors are applied during T_s = T_0+ (T_1+T_2).

Voltage gain *G*, Modulation index is given as

$$M = \frac{\pi M}{3\sqrt{3M}-\pi} \quad (1)$$

Thus, the voltage stress is

$$V_s = BV_0 = \frac{\pi M}{3\sqrt{3M}-\pi} \quad (2)$$

Boost factor and the voltage gain can be calculated as

$$B = \frac{1}{1-2*\frac{T_0}{T}} = \frac{\pi*M}{3*\sqrt{3*M}-\pi} \quad (3)$$

$$\frac{V_0}{V_{dc}/2} = M * B = \frac{M}{\sqrt{3M}-\pi} \quad (4)$$

The duty cycle is kept constant and can be expressed as

$$\frac{T_0}{T} = \frac{2-\sqrt{3*M}}{2} = 1 - \frac{\sqrt{3*M}}{2} \quad (5)$$

Step-up factor can be calculated as

$$b = \frac{1}{1-2*D_0} \quad (6)$$

The PV Panels with ground capacitance is shown in figure 2.

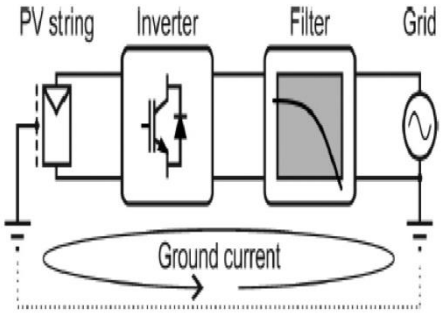

Fig. 2: PV Panels with ground capacitance

The attained simplicity not only regarding operation but also regarding construction becomes the evident when comparing some aspects, as shown in Table 1.

Table 1: Comparison of topologies

TOPOLOGY	HERIC	H5	PROPOSED
Total amount of switches	6	5	4
High frequency switches	4	3	2
Low frequency switches	2	2	2
Semiconductor in current path	2	3	2
No of inductors	1	1	1

In addition, all the high-frequency switches in the variant of the proposed circuit do not require high-side drivers, which has already stated reduces the cost and increased significantly.

4. Simulation Results

On the basis of proposed topology the study of leakage current and ground current and resonant frequency the experiment was simulated under Simulink. The Simulink model is shown in figure 3 and output waveforms are shown in figure 4.

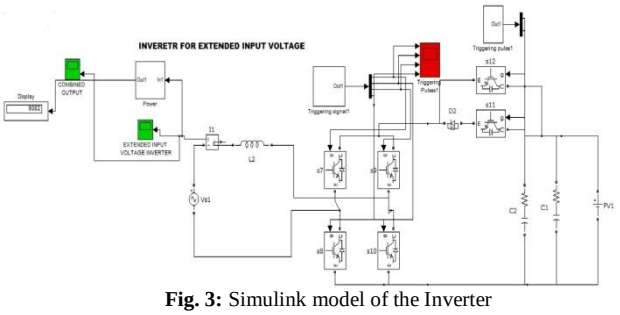

Fig. 3: Simulink model of the Inverter

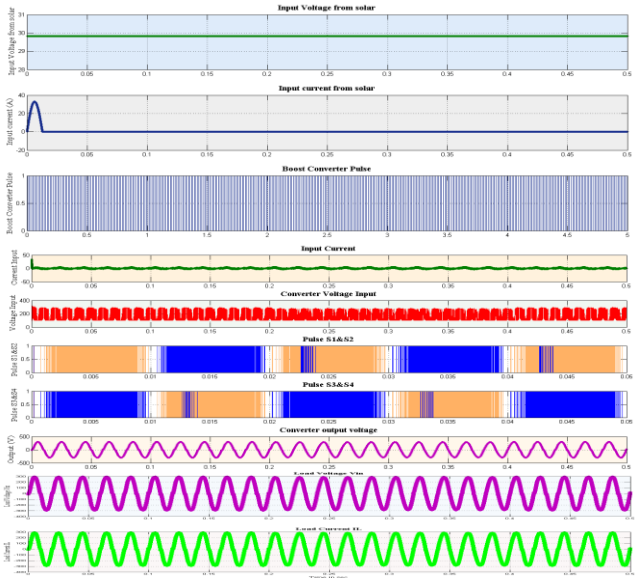

Fig. 4: MATLAB simulation output

5. Hardware Implementation

In order to evaluate the performance of the variant of the proposed circuit, a prototype was built as shown in the figure 5 and figure 6 shows the testing layout of the model. The PV output voltage and current, the inverter output voltage and current, and the solar radiation intensity are recorded every 1hr.

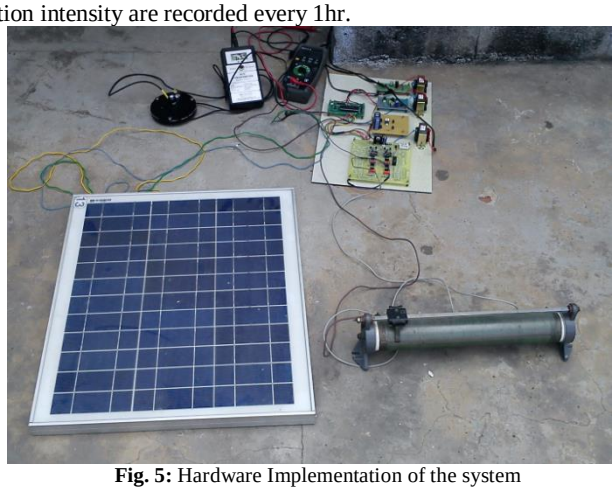

Fig. 5: Hardware Implementation of the system

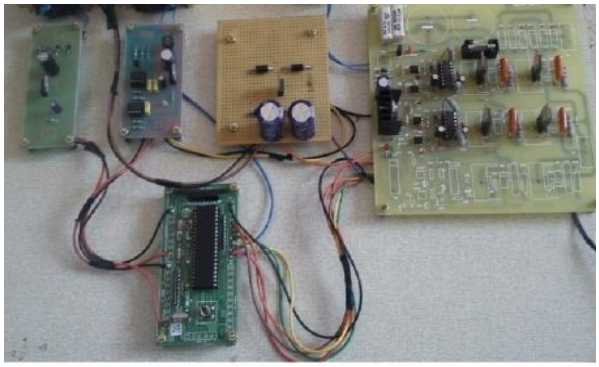

Fig. 6: Hardware of the proposed topology

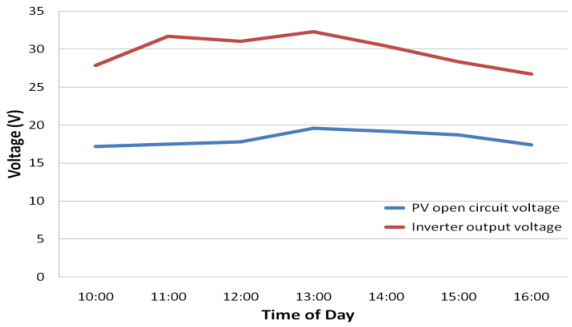

Fig. 7: Voltage output curve of PV panel in DC and inverter

The output from the experiment is shown in figure 6. The DC output voltage of the PV panel is shown in blue line, while the AC output of the inverter is shown in red line.

6. Conclusion

An investigation on transformer less inverter topologies and control strategies for grid connected PV system is presented in this paper. Transformer less concept has an advantage of high efficiency, less design complexity and less weight. The proposed work has high efficient single phase transformer less inverter which is controlled by PIC 16F877. The peak efficiency of transformer less converter circuits is 95-98%. In this topology requires earth parasitic capacitance of PV panel, which inject capacitive ground current and potential difference between solar panel and earth. A part of resonance circuit is capacitance which filters the ripples present in the potential. The overall optimization provides small level of damping, helps to reach permissible level of amplitude and high efficiency.

References

[1] G. Ganesh, G Vijay Kumar, A.R.Vijay Babu, G.Srinivasa Rao, Y.R.Tagore, Performance Analysis and MPPT Control of a Standalone Hybrid Power Generation System, Journal of Electrical Engineering, vol. 15, no. 1, (2015), pp. 334-343.

[2] M. Calais, J. Myrzik, T. Spooner, and V. G. Agelidis, “Inverters for single-phase grid connected photovoltaic systems—An overview,” in”, Proceedings of the IEEE PESC’02, vol. 2, (2002), pp. 1995–2000.

[3] F. Blaabjerg, Z. Chen, and S. B. Kjaer, “Power electronics as efficient interface in dispersed power generation systems,” IEEE Trans. Power Electron., vol. 19, no. 5, (2004) pp. 1184–1194.

[4] T. Shimizu, M. Hirakata, T. Kamezawa, and H. Watanabe, “Generation control circuit for photovoltaic modules,” IEEE Trans. Power Electron., vol. 16, no. 3, (2001), pp. 293–300.

[5] Suresh, K, Arulmozhiyal, R, “Design and implementation of bi-directional dc-dc converter for wind energy system”, Circuits and Systems, vol. 7, (2016), pp. 3705-3722.