International Journal of Engineering &Technology, 7 (4.24) (2018) 67-70

International Journal of Engineering & Technology

Website: www.sciencepubco.com/index.php/IJET

Research paper

A Novel Ternary Content Addressable Memory Cell

VenkataRamana Datti[1]*, Dr.P.V.Sridevi[2]

[1]*Assistant Professor, ECE dept, GMR Institute of technology, Rajam, Andhra Pradesh*
[2]*Professor, ECE Dept, Andhra University College of Engineering (A), Visakhapatnam, Andhra Pradesh*
**Corresponding author E-mail: venkataramana.d@gmrit.org*

Abstract

Ternary content addressable memories (TCAM) are used for parallel searching. The parallel searching, results high speed but consumes more power. For higher search speed applications, NOR type matchline TCAMs are useful. The NOR type matchline TCAM needs high power; therefore, the power reduction is the major objective of many reported designs. Here, a novel TCAM cell is proposed. The proposed Ternary CAM cell power consumption is 32% lesser than the NOR type matchline TCAM cell. Simulations are performed using cadence 45-nm technology.

Keywords: *Ternary CAM, power consumption, NOR-type matchline, precharge.*

1. Introduction

Now a day, internet is becoming the part of day to day life. Speed of the internet is mainly depends on its searching algorithms. But searching speed of search algorithms using software is low. Searching using hardware elements like memories plays a vital role in internet speed. Earlier Random Access memories (RAM) are used for this purpose.But RAM takes address as an input and gives content as an output.Usually internet users search for a content by giving content as an input. In this regard, RAM has its own limitations. Content addressable memories are the best choice for this kind. Content addressable memories, takes content as an input and gives address as an output. CAM helps in finding the location of the content and RAM is used to retrieve the data from that location.

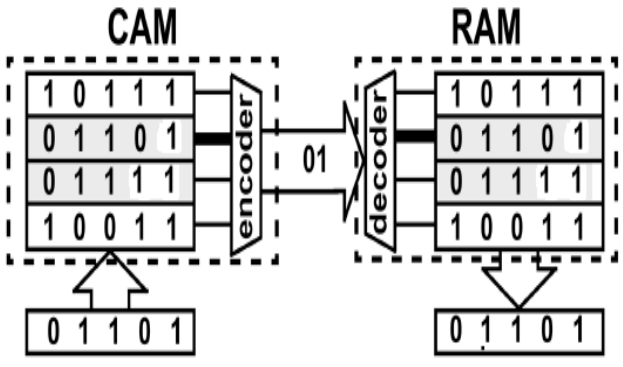

Fig. 1: CAM based implementation of data search

Data search using CAM can be done as shown in Fig.1. Here the objective is to retrieve the data "01101" from the memory location.RAM gives the data "01101" if address is specified. This address is obtained from CAM.CAM takes "01101" as an input and gives the address location "01" as an output. Now RAM takes the address location "01" as an input and gives the desired content "01101" as an output. So for high speed applications, Content addressable memories are very useful.

Basically Content addressable memories are of two types, namely binary content addressable memory (BiCAM) and ternary content addressable memory (TCAM). TCAM has a special feature that it can support wildcard entry where as BiCAM does not support.So TCAM is preferable than BiCAM.The most important application of TCAM is packet forwarding.TCAMs are also used in hardwares for routing applications such as network router, cache memories[3]-[6]. TCAM designer's objective is to increase the search speed and to reduce the power consumption.

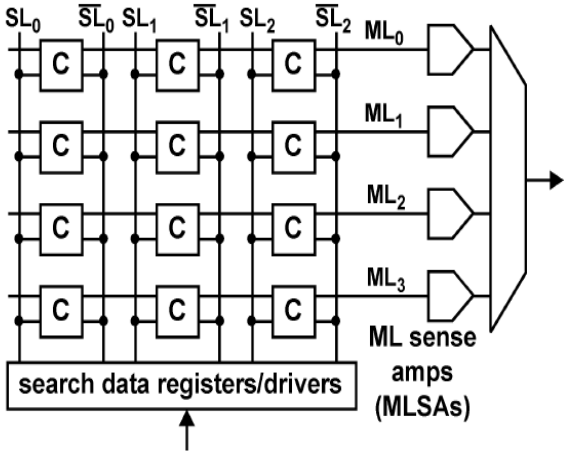

Fig. 2: TCAM Architecture

Conventional TCAM is shown in Fig.2[2] . In Fig. 1,"C" represents TCAM cell and ML_0 , ML_1, ML_2, ML_3matchlines corresponding to matchlines 0,1,2,3 respectively. SL_1, SL_2 ,SL_3 and their complements represents search lines. TCAM is a memory element in which information is stored in rows and search happens simultaneously. Content addressable memory, takes content as an input and gives address as an output. If stored data matches with the search data then it gives address in which the data stored. A

Copyright © 2018Authors. This is an open access article distributed under the Creative Commons Attribution License, which permits unrestricted use, distribution, and reproduction in any medium, provided the original work is properly cited.

match or mismatch information is accessed by the sense amplifier. As shown in Fig.2, every TCAM cell in a dataline is connected to a common matchline (ML). Initially all matchlines are charged to high voltage. ML value maintains at high voltage if there is a match. Otherwise the respective matchline discharges. To start a new search, all matchlines should be at high voltage means ML needs to be charged again. Thus, the frequent charging and discharging happens in ternary content addressable memories. Frequent charging and discharging leads to more power dissipation.In the proposed cell, there is no need of frequent charging and discharging of matchline[1]. So there will be low power dissipation.

The remainder of this short-lived is organized as follows: Section 2 describes the Ternary Content addressable memory cell operation. Proposed TCAM cells are described in Section 3. In Section 4, the performance comparison results obtained from simulations of TCAM cells have been presented and Section 5 concludes this short-lived.

2. TCAM Cell

Content addressable memories are of two types. Those are binary CAM and Ternary CAM. 0 and 1 can be stored in binary CAM cell where as in TCAM cell 0,1, and don't care(X) can also be stored. TCAM gives wildcard entry because of its storage capability of don't care (X). TCAM is the most widely used CAM compared to binary CAM. TCAM cells are of NAND & NOR type. In NAND type TCAM cells are connected in series where as in NOR type cells are connected in parallel. NAND type TCAM cell offers low power dissipation but low speed where as NOR type TCAM cells offer high speed but at a cost high power dissipation. So in general NOR type cells are preferred compared to NAND type in high speed applications.

NOR type TCAM cell and its encoding is shown in Fig. 3& Table 1 respectively. To store three states two bits are essential so TCAM cell requires two SRAM cells. In TCAM cell, a logic "0" is stored by setting A = 0 and B = 1, Logic "1" by setting A = 1 & B = 0 and don't care by setting A = 1 & B = 1. Here A= 0 and B = 0 is unused state. In TCAM cell, search a logic "0" happens by setting SL = 0 and$\overline{SL}$ = 1, Logic "1" by setting SL = 1 and$\overline{SL}$= 0 and don't care by setting SL = 1 and $\overline{SL}$= 1 .

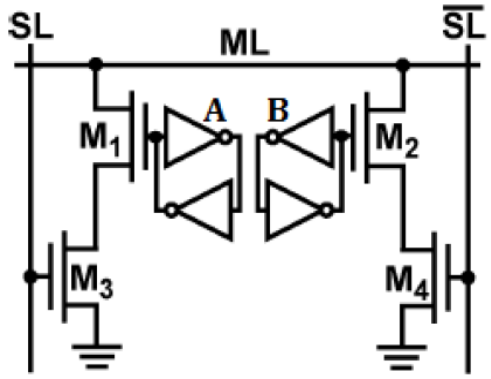

Fig. 3: NOR type TCAM Cell

Table 1: Ternary encoding for NOR Cell

Stored Value	Stored	
	A	B
0	0	1
1	1	0
X	1	1

The operation of the TCAM cell in match case is as follows: considerA = 0 and B = 1 then M_1 is in ON state and M_2 is in OFF state. Now if SL = 0 and $\overline{SL}$ = 1then M_3 is in OFF state and M_4 is in ON state.Here M_1,M_4 is in ON state and M_2, $M_3$is in OFF state. So prechargedmatchline(ML) maintains at high voltage since itis not connected to ground.The same thing is also hold good for A = 1 and B = 0 .If don't care is stored in the cell i.e.A = 1 and B = 1 then both M_1 and M_2 is in OFF state. So prechargedmatchline (ML) maintains at high voltage since it is not connected to ground irrespective of search line voltage.The operation of the TCAM cell in mismatch case is as follows: consider A = 0 and B = 1 then M_1 is in ON state and M_2 is in OFF state. Now if SL = 1 and $\overline{SL}$ = 0 then M_3 is in ON state and M_4 is in OFF state.Here M_1,M_3 is in ON state and M_2, $M_4$is in OFF state. So prechargedmatchline (ML) maintains at low voltage since it is connected to ground.Similarly if A = 1 and B = 0 then M_1 is in OFF state and M_2 is in ON state. Now if SL = 0 and $\overline{SL}$ = 1 then M_3 is in OFF state and M_4 is in ON state.Here M_1,M_3 is in OFF state and M_2, M_4 is in ON state. So prechargedmatchline (ML) maintains at low voltage since it is connected to ground through $M_2$and M_4. But if don't care is stored in the cell, mismatch is not possible. This is referred as wildcard entry.

NOR type TCAM matchline structure is shown in Fig.4. Here TCAM cell is connected to supply voltage through pMOStransistor. Traditionally, CAM operation is divided into three parts. Namely data store, matchlineprecharge& data search. During precharge phase pMOS transistor is in ON state so ML is connected to supply voltage. In evalution phase, pMOS transistor needs to be OFFsothat"pre" value needs to be high.Initially matchline is charged to high voltage by setting "pre" value low. During evalution if there is a mismatch, matchline discharges. So for every new search, matchline is needed to charge to supply voltage.This type of charging and discharging causes highpower dissipation.

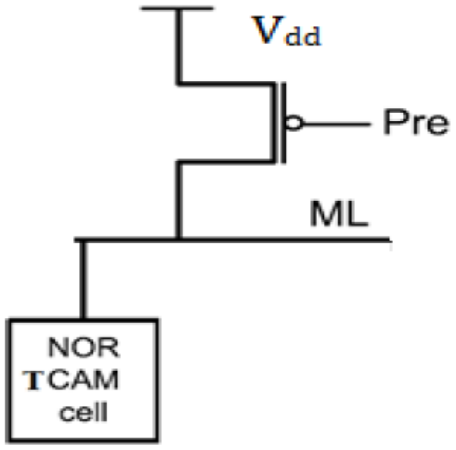

Fig. 4: NOR type MatchlineTCAM

3. Proposed TCAM Cell

Proposed TCAM cell power consumption is lesser than the existing design. Proposed TCAM cell is shown in Fig. 5. The encoding of proposed cell is same as conventional cell. To store the data into TCAM cell, write enable(WE) should be active. Q1 and Q2 is in On state when write enable is high. So the values of A and B will be stored in their respective SRAM cells.

The operation of the proposed TCAM cell in match case is as follows: If A is '0' and B is '1' means logic '0' is stored in TCAM if WE = 1. To search for logic '0', set SL = 0 and$\overline{SL}$ = 1and WE =0. Hence Q3 is OFF and Q4 is in ON state. So ML value is high because B is high. it indicates match.Similarly, If A is '1' and B is '0' means logic '1' is stored in TCAM if WE = 1. To search for logic '1', set SL = 1 and$\overline{SL}$ = 0 and WE = 0. Here Q3 is ON and Q4 is in OFF state. So ML value is high because A is high. Now If A is '1' and B is '1' means don't care(X) is stored in TCAM if WE = 1. To search for don't care(X), set SL = 1 and$\overline{SL}$ = 1 and WE = 0. Here Q3 andQ4 is also in ON state. So ML value is high because of A& B is high.

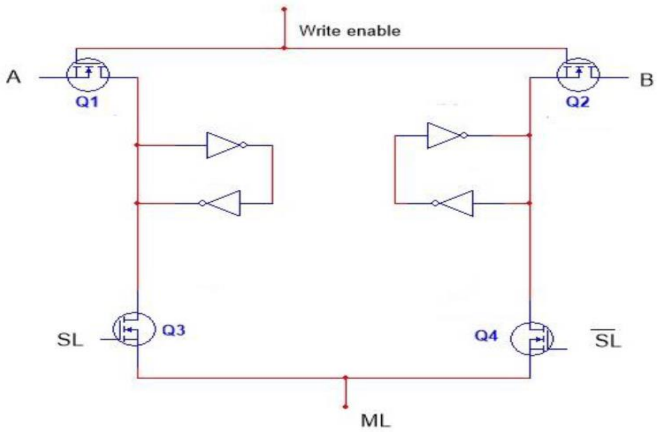

Fig. 5: Proposed TCAM Cell

The operation of the proposed TCAM cell in mismatch case is as follows: If A is '0' and B is '1' means logic '0' is stored in TCAM if WE = 1. Here If SL = 1 ,$\overline{SL}$ = 0 and WE = 0, Q3 is ON and Q4 is in OFF state. So ML value is low because A is low. it indicates mismatch.Similarly, If A is '1' and B is '0' means logic '1' is stored in TCAM if WE = 1. To search for logic '0', set SL = 0 and$\overline{SL}$ = 1 and WE = 0. Here Q3 is OFF and Q4 is in ON state. So ML value is low because B is low. In the same case, to search for don't care(X), set SL = 1 and$\overline{SL}$ = 1 and WE = 0. Here Q3 and Q4 is also in ON state. So ML value is low because of A is high & B is low. It also indicates mismatch.

Pre charging of ML is not done here. ML value is controlled by stored values. Proposed TCAM operation is based only on two phases, Namely data write and data search. Due to the absence of frequent charging and discharging of matchline, power dissipation is considerably reduced.The number of transistors in the proposed cell is same as conventional cell.

4. Results

Proposed Ternary CAM and conventional Ternary CAM cells were implemented using cadence 45nm technology at a supply voltage of 1V. Simulations are carried out for 300ns by storing logic "0" in the cells. Evalution is carried out by providing logic "0", logic "1" and don't care(X).Waveforms of conventional TCAM and proposed TCAM cells are shown in figures 6 and 7 respectively. Precharge and evalution phases are indicated for conventional TCAM as shown in figure 6. Evalution phase is indicated for proposed TCAM as shown in figure 7. The area and speed of the proposed cell is same as conventional. From the waveforms it has been observed that, average power consumption of conventional TCAM cell is 8.66µW and for proposed TCAM cell is 5.84µW.

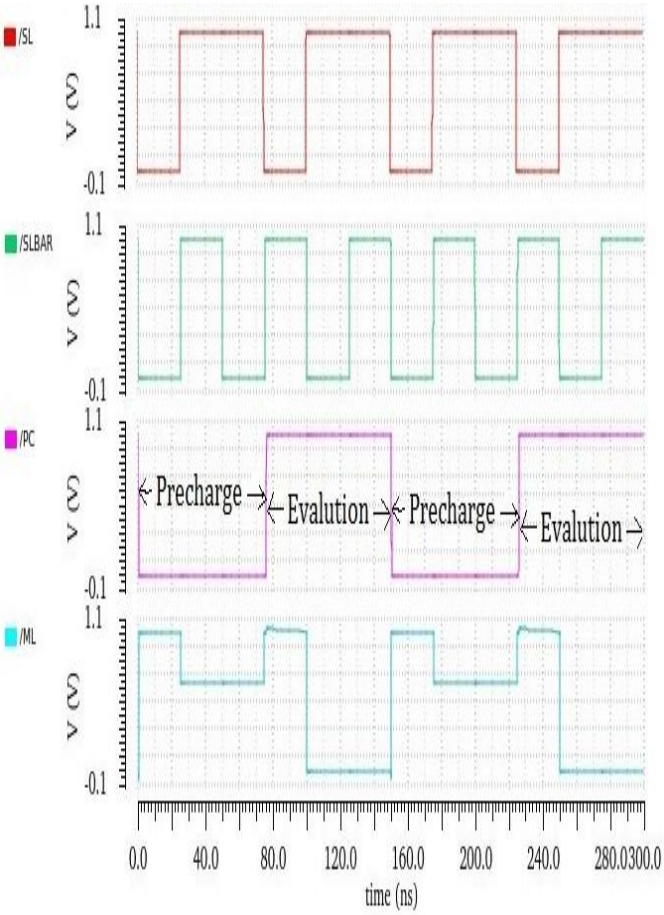

Fig. 6: Waveforms of conventional TCAM Cell

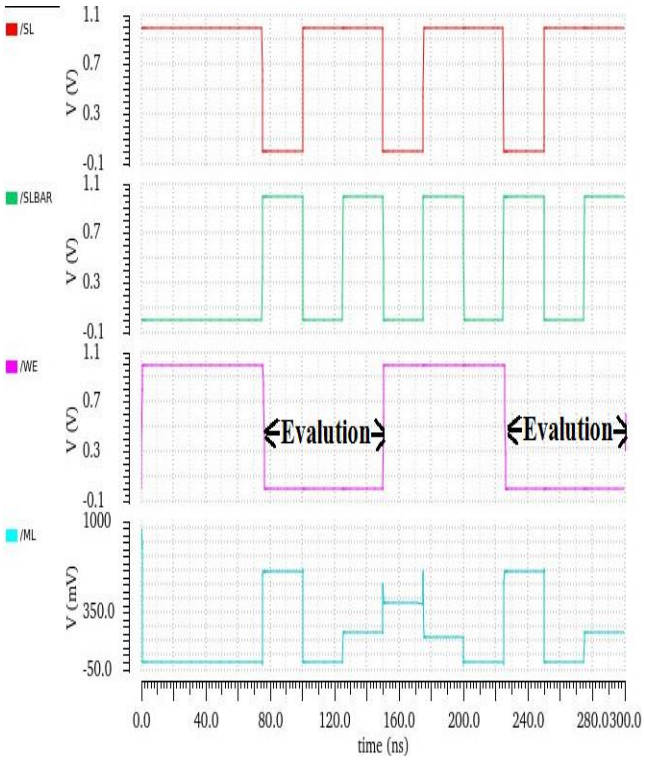

Fig. 7: Waveforms of proposed TCAM Cell

5. Conclusion

Conventional NOR type TCAM cell is simulated and observed that it consumes more power. The proposed TCAM cell is also

simulated using cadence and observed that it consumes 32% less power than the conventional. Speed of the proposed cell is same as conventional cell. Proposed TCAM cell uses stored values for matchlinewhere asmatchline of conventional TCAM cell is connected to supply voltage through a transistor.

References

[1] Mohammad Zackriya, Harish M Kittur,"Precharge free, Low power Content Addressable Memory," IEEE Trans. Very Large Scale Integr.(VLSI) Syst, vol.24, no. 8, pp. 2614-2621, Aug 2016.

[2] K. Pagiamtzis and A. Sheikholeslami,"Content-Addressable memory(CAM) circuits and architectures: A tutorial and survey," IEEE J. *Solid state circuits*, vol.41, no. 3, pp. 712-727, Mar.2006.

[3] S. K. Maurya and L. T. Clark , "A dynamic longest prefix matching content addressable memory for IP routing," IEEE Trans. Very Large Scale Integr.(VLSI) Syst, vol.19, no. 6, pp. 963-972,Jun. 2011.

[4] A. Bremler-Barr and D. Hendler, "Space-efficient TCAM based classification using gray coding," *IEEE Trans. Comput.*, vol. 61, no. 1, pp. 18–30, Jan. 2012.

[5] Y. C. Chin, R. Sridhar, V. Demjanenko, P. W. Palumbo and S. N. Srihari, "A Special purpose content addressable memory chip for real-time image processing," IEEE J. *Solid- state circuits*, vol.27, no. 5, pp. 737-744, May 1992.

[6] S. M. Jalaleddine, "Associative memories and processors: The exact match paradigm," *J. King Saud Univ.-Comput. Inf. Sci.*, vol. 11, pp.45-67, March2013.