International Journal of Engineering & Technology, 7 (4.18) (2018) 23-26

International Journal of Engineering & Technology

Website: www.sciencepubco.com/index.php/IJET

Research paper

Finite Element Analysis of Prestressed Concrete Sleeper Subject to Static Loading

Mohd Ikmal Fazlan Rozli[1]*, Nur Nadeera Kipperawi[1], Che Mohd Hilmi Safiuddin Che Jamaludin Mahmud[1], Kay Dora Abdul Ghani[1], Norliyati Mohd Amin[2]

[1]Faculty of Civil Engineering, Universiti Teknologi MARA, Pulau Pinang, Malaysia
[2]Faculty of Civil Engineering, Universiti Teknologi MARA, Shah Alam, Malaysia
**Corresponding author E-mail: ikmal601@ppinang.uitm.edu.my*

Abstract

Railway is one of the most important, reliable, and widely used means of transportation, carrying freights, and passengers. Thus, a study on railway is indeed important for the development of railway engineering and technologies. Prestressed concrete sleepers are the main structural elements of railway tracks. They play a vital role in railway track performance, behaviour, and safety. The main objective of the study is to develop a three-dimensional finite element model of prestressed concrete sleeper to compare load-deflection of finite element analysis and experimental result and identify the behaviour of the sleeper subject to static loading. The three-dimensional element analysis is executed using LUSAS. A concrete element is modelled as a hexahedral element and prestressing tendon is modelled as a bar element. Later, a positive moment test is carried out on the model and at last, a validation of the finite element model through comparison with the experimental load-deflection response is presented in this study. Thus, good agreements between finite element analysis and experimental results make the work beneficial and reliable.

Keywords: *Deflection, Finite Element Analysis, LUSAS, Prestressed Concrete Sleeper, Static Loading*.

1. Introduction

Railways are an important infrastructure and the safest transport option which is responsible for transporting people and goods. According to Kaewunruen (2007), transportation structures are very important which bring to the growth of both economy and society of any country around the world.

Railway tracks consist of components grouped into two categories, superstructure and substructure. Superstructure consists of rails, rail pads, fastening system, and sleepers. Ballast, sub-ballast, and subgrade are classified as a substructure [1]. Among those components, the roles of sleepers are noticeable which is used to support the rail and maintain the track gauge, to withstand vertical and longitudinal movement of rails, and to transfer and distribute loads from rail to ballast [2]. Prestressed concrete sleeper with longer life cycles and lower maintenance costs brought many technical and economic advantages to the railway engineering [10]. With their great weight, prestressed concrete sleepers assure the stability for the train [11]. There are two types of prestressed concrete sleeper, monoblock and twin block. Fig. 1 shows the structural parts of track system [8].

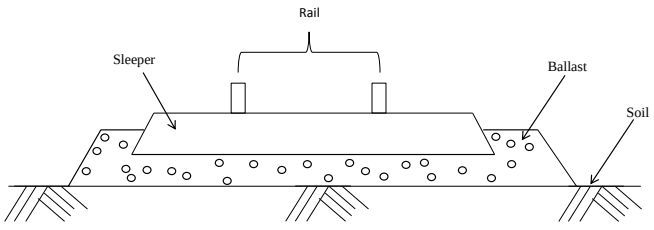

Fig. 1: Structural parts of railway track [8]

At the moment, monoblock prestressed concrete sleeper is the most commonly used for railway track. Current practice shows that PCS is designed based on an international code (AS1085.14). According to [8], apart from that, PCS can also be designed based on EN 13230 and local railway authority specification (Keretapi Tanah Melayu Berhad, KTMB). However, accidents do occur, which cost money, cause anguish to the rail users, and bring bad name to the railways. There are various categories of accidents. But, in railway system, derailment is commonly occurred. Derailment occurred due to the failure of railway component. Sudden fracture or failure of track or other railway components can contribute to the derailment. This can be supported by [6] which claimed that the major cause of derailment is the deflection present in prestressed concrete sleeper.

As a very important component of the railway track, the strength of prestressed concrete sleepers is directly related to the track safety. Concrete structural components require the understanding of the responses of those components to a variety of loading [3]. According [2], it was found that the reinforced concrete sleeper not to be effective due to the poor structural performance and extensive damage. In order to fully understand the behaviour of prestressed concrete sleepers and their action with other components of railway track, investigation using numerical models, field studies, and experimental test should be considered.

Today, finite element analysis has played a vital role in the industry for design and safety improvement. There are numerous of software that can be used for solving problems by using finite element analysis such as ANSYS, NASTRAN, ABAQUS, and LUSAS which have the material model to predict the failure of a structure prior to the testing. Due to its availability in the industry, finite element analysis software is preferable to use for modelling in general design practice [5]. Therefore, a three-dimensional fi-

Copyright © 2018 Authors. This is an open access article distributed under the Creative Commons Attribution License, which permits unrestricted use, distribution, and reproduction in any medium, provided the original work is properly cited.

nite element model of monoblock prestressed concrete sleeper is developed by finite element analysis software, LUSAS. Thus, the prestressed concrete sleeper structure can be improved by obtaining the best configuration with maximum safety. Fig. 2 depicts the actual appearance of monoblock prestressed concrete sleeper used in Malaysia.



Fig. 2: Actual appearance of the monoblock prestressed concrete sleeper

2. Methodology

2.1. Sleeper Section

The sleeper is symmetric in shape and size. The dimension of the sleeper is 2000 mm length, 180 mm top width, 250 mm bottom width, and 221 mm height with 18 prestressing tendons embedded in the sleeper. A finite element analysis software, LUSAS, is utilized in this study.

2.2. Material Properties

Table 1 shows the material properties used for the three-dimensional finite element monoblock prestressed concrete sleeper model.

Table 1: Material Properties

	Concrete	Prestressing Tendon
Young's Modulus (kN/mm^2)	43	200
Poisson's Ratio	0.2	0.3
Density (kN/m^3)	23	77
Uniaxial Compressive Strength (kN/mm^2)	60	-
Uniaxial Tensile Strength (kN/mm^2)	3.5	-
Cross-sectional area (mm^2)	47515	19.60
Initial Prestressing Force (N/mm^2)	-	1448

2.3. Modelling of the Prestressed Concrete Sleeper

To model the monoblock prestressed concrete sleeper, initially, the geometric model of the sleeper is created in LUSAS as shown in Fig. 3.

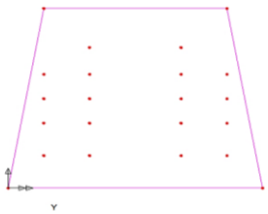

Fig. 3: Cross-section for the monoblock prestressed concrete sleeper

In order to model the complicated geometry of the sleeper, the created surface is selected to create a series of volumes. To create further volumes of the model, the translation value in the Z direction is entered by using sweeping from the end cross-section of the volume. These volumes have been glued using Rigid Link Constraint and then a full sleeper volumetric model is created. To create prestressing tendon, all the points are selected, then, the lines are created by sweeping where the translation value of 2000 mm in the Z direction is entered. Line model is shown in Fig. 4.

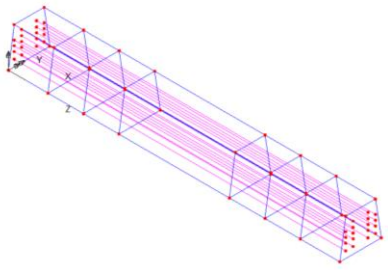

Fig. 4: Line model of monoblock prestressed concrete sleeper and prestressing tendon

To model the prestressing tendon model, bar structural element is used for the line mesh. A hexahedral element is used for the volume mesh to model a concrete. The material properties for the prestressing tendon and concrete sleeper are defined by entering the value from Table 1. Once the line mesh, volume mesh, and material properties are defined, these attributes are assigned to the concrete sleeper and prestressing tendon respectively. The meshed volume and line are shown in Fig. 5.

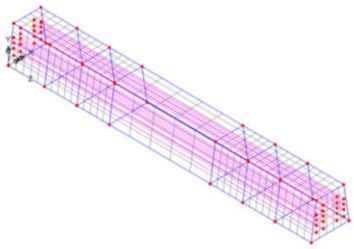

Fig. 5: The meshed volume of monoblock prestressed concrete sleeper and meshed line of prestressing tendon

To model the self-weight of the concrete sleeper, body force loading attribute is applied with the gravitational acceleration value of 9.81 m/s^2 in the negative Z direction. To simulate the support that is identical to the positive moment test at the rail seat position setup according to Australian Standard (AS 1085.14 – 2012) as shown in Fig. 6, pinned support and vertical point load are applied on the model [9].

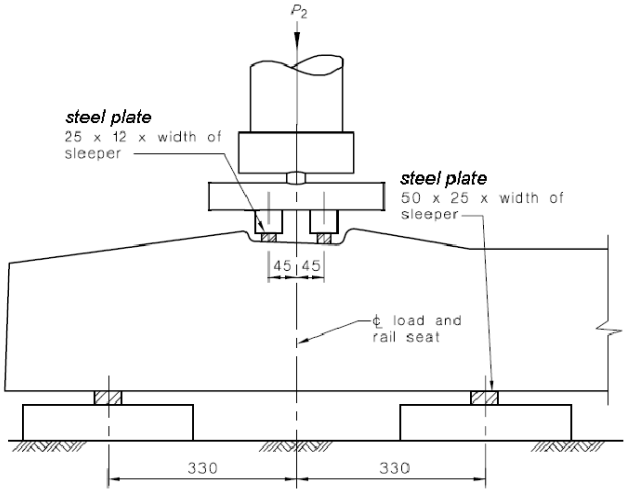

Fig. 6: Rail seat – Positive Moment Test, Repeated Load Test, Bond Development and Ultimate Load Test (AS 1085.14 – 2012)

As shown in Fig. 7, monoblock prestressed concrete sleeper is placed at the reaction frame in heavy structure laboratory which is used to test the sleeper. The load is applied until the first crack appeared on the surface of the sleeper and the load subjected to the sleeper is recorded. The load is continued to increase until it reaches its ultimate load and the data is recorded. Fig. 8 shows that the Linear Variable Displacement Tranducer (LVDT) is installed in monoblock prestressed concrete sleeper in order to measure the displacement of the sleeper when subjected to static load. Fig. 9 shows that the first crack appeared on the surface of the sleeper subjected to the static load.

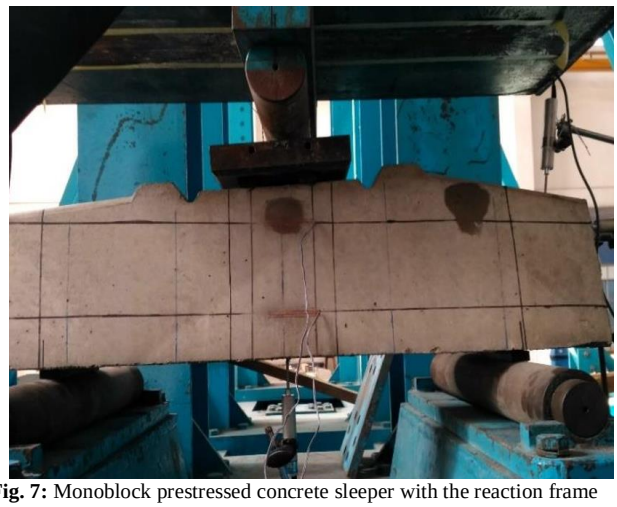

Fig. 7: Monoblock prestressed concrete sleeper with the reaction frame (Positive Moment Test)



Fig. 8: LVDT is installed in monoblock prestressed concrete sleeper (Positive Moment Test)

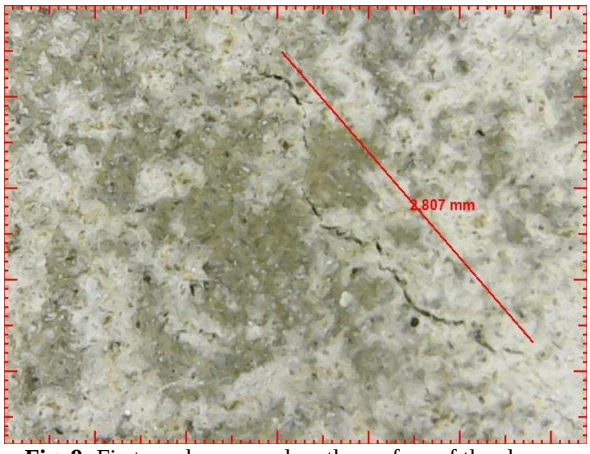

Fig. 9: First crack appeared on the surface of the sleeper

Similarly, vertical point load is modelled by applying 50 kN and 50 kN increment of load are applied until 400 kN in LUSAS finite element analysis. Vertical point loads are applied on line 20 and line 59. Three-dimensional full-scale model of monoblock prestressed concrete sleeper with assigned attributes is shown in Fig. 10.

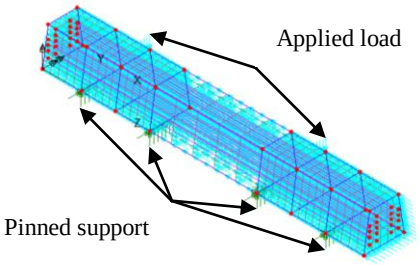

Fig. 10: The assigned attributes on the model of monoblock prestressed concrete sleeper

Once all the attributes are assigned to the model, the analysis could be run to obtain the deflection on the model. The deformed mesh and the contour of the model are shown in Fig. 11 and Fig. 12 respectively.

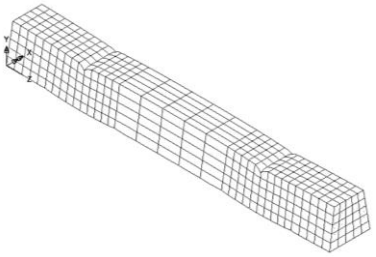

Fig. 11: The deformed mesh

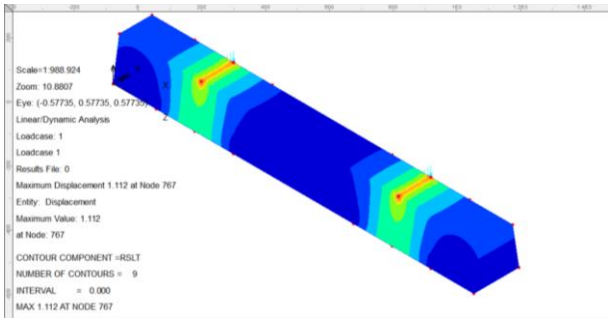

Fig. 12: The contour

3. Results and Discussion

3.1. Validation of LUSAS Finite Element Model

After performing a numerical analysis on monoblock prestressed concrete sleeper subject to static loading, the deflection at the rail seat position of the sleeper is measured. Initially, the structures are uncracked and stiff. However, due to the further loading applied on the rail seat position of the monoblock prestressed concrete sleeper, it caused a crack and deflection [7]. The crack and deflection have occurred as a flexural crack. Monoblock prestressed concrete sleeper behaves plastically due to the deflection that causes a reducing in stiffness of the monoblock prestressed concrete sleeper. When it reaches its ultimate load of 350 kN, the monoblock prestressed concrete sleeper is failed. The result of load-deflection between the LUSAS finite element model and experimental is tabulated in the table as shown in Table 2 and the graph is constructed according to the tabulated data as shown in Fig. 13.

Table 2: Load-deflection of LUSAS Finite Element Model and Experimental Result

Load (kN)	LUSAS Model (mm)	Experimental Result (mm)
0	0	0
50	1.112	2.61
100	1.224	3
150	3.264	4.2
200	4.151	4.8
250	4.845	5.1
300	5.539	5.6
350	6.13	6
400	7.717	7

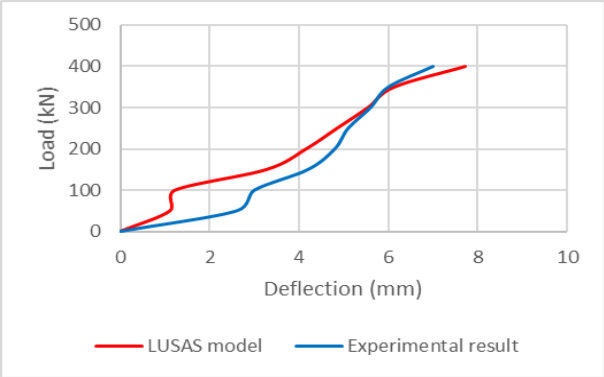

Fig. 13: Comparison of load-deflection between LUSAS Finite Element Model and Experimental Result

Based on the comparison of load-deflection data between LUSAS finite element model and experimental in Table 2, it is found that the deflection values of the experimental result for load 50 kN until 300 kN are greater than the deflection values of the LUSAS finite element model. The deflection on LUSAS finite element model and the experimental result at ultimate load of 350 kN is 6.13 mm and 6 mm respectively. Therefore, the difference is 2.12%.

It is also found that numerical analysis is necessary as it can provide a prediction of deflection of the structure under all types of load. This is because to ensure that the design and life service of the structure are met the safety requirement [4]. Furthermore, the prediction of the load-deflection behaviour of the structure is necessary for responses from elastic to inelastic as well as under possible loading conditions [2]. Therefore, it is essential to estimate the ultimate load to assess the safety of monoblock prestressed concrete sleeper structure against failure. From these results, the positive moment test conducted using a finite element model of monoblock prestressed concrete sleeper corresponds well with the experimental, thus the validity of this finite element analysis can be confirmed.

4. Conclusion and Recommendation

4.1. Conclusion

The contributions of this study are discussed and benefit the real world from this evaluated research. The primary achievement is the establishment of the three-dimensional finite element model of monoblock prestressed concrete sleeper in LUSAS. This three-dimensional finite element model for analysis of the deflection behaviour of monoblock prestressed concrete sleeper structure under static load have been developed. Another achieved objective is comparing the finite element analysis results with the experimental result. From the result, it has been found that the relationship between load and deflection are found to be non-linear and monotonically increasing. The positive moment test conducted using a finite element model of monoblock prestressed concrete sleeper is corresponded well with the experimental result, thus the validity of this finite element analysis can be confirmed. The proposed research objectives are achieved.

4.2. Recommendation

The outcomes of this research are indeed contributing to the infrastructure engineering such as road and traffic, as well as track safety area. The recommendation for further research is finite element modelling on monoblock prestressed concrete sleeper subject to dynamic load. This may include the natural frequencies and mode shape, and track damping and energy absorption. This type of study may contribute to the comprehension of the behaviour of monoblock prestressed concrete sleeper under dynamic loading. Furthermore, finite element analysis software, LUSAS, was employed in this study, it would be benefitting the industry and economics in sense of saving time and cost since modelling does not require physical structure so that there is no waste of money on expensive material.

Acknowledgement

The authors would like to express their sincere gratitude to Ministry of Higher Education Malaysia (MOHE) for the funding under FRGS scheme (600-IRMI/FRGS 5/3 (089/2017)). A special appreciation also goes to Research Management Centre (RMC) and Faculty of Civil Engineering, UiTM Pulau Pinang and Shah Alam for providing facilities and guidance that helped this research to be completed.

References

[1] Domingo, L. M., Martín, C. Z., Avilés, C. P., & Herráiz, J. I. R. (2014), 'Analysis of the Influence of Cracked Sleepers under Static Loading on Ballasted Railway Tracks', The Scientific World Journal.

[2] Javad, T., Mendis, P., Ngo, T., & Sofi, M. (2015), 'Behaviour of pre-stressed high strength concrete sleepers', in International Conference on Performance-based and Life-cycle Engineering, 339–347.

[3] Kaewunruen, S., & Remennikov, A. (2006), 'Nonlinear finite element modelling of railway prestressed concrete sleeper', in the The Tenth East Asia-Pacific Conference on Structural Engineering and Construction August, Bangkok, Thailand, pg. 323–328.

[4] Koh, T., Shin, M., Bae, Y., & Hwang, S. (2016). Structural performances of an eco-friendly prestressed concrete sleeper, 102, 445–454. https://doi.org/10.1016/j.conbuildmat.2015.10.189

[5] Kumar, D. K., & Sambasivarao, K. (2014). Static and Dynamic Analysis of Railway Track Sleeper,in International Journal of Engineering Research and General Science Volume 2, Issue 6, October-November.

[6] Li, H., Asce, A. M., Soliman, M., Asce, A. M., Frangopol, D. M., Asce, D. M., & Xia, H. (2017). Fatigue Damage in Railway Steel Bridges : Approach Based on a Dynamic Train-Bridge Coupled Model, 22(11), 1–8. https://doi.org/10.1061/(ASCE)BE.1943-5592.0001144.

[7] Pawluk J., Cholewa A., Kurdowski W., Derkowski, W. (2014), 'Some problems with prestressed some problems with prestressed concrete sleepers', in International Journal of Research in Engineering and Technology, Vol 3.

[8] Rozli, M.I.F., Ilias, S.N., Bakar A.A.,Hamzah S.H. (2015), Constant amplitude spectrum of three coaches train and cyclic counting on prestressed concrete sleeper (PCS), in Jurnal Teknologi, pg. 1-5.

[9] Salim, M. R., Bakar, A. A., & Shariff, A. A. (2012). Investigation on simulation of train loading on prestressed concrete sleepers, 158, 666–670. https://doi.org/10.4028/www.scientific.net/AMM.157-158.666

[10] Shokrieh, M. M., & Rahmat, M. (2006). On the reinforcement of concrete sleepers by composite materials, 76, 326–337. https://doi.org/10.1016/j.compstruct.2005.05.005

[11] Zakeri, J., & Rezvani, F. H. (2012). Failures of Railway Concrete Sleepers During Service Life, 1(1), 1–5. https://doi.org/10.5923/j.ijcem.20120101.01