International Journal of Engineering & Technology, 7(4.16) (2018) 111-119

International Journal of Engineering & Technology

Website: www.sciencepubco.com/index.php/IJET

Research paper

Multiple Fault Detection, Classification and Location in Electric Power Transmission Lines in Matlab Environment

Dr. Afaneen anwar [1] *, Rana Ali Abttan [1]

[1] *Department of Electrical and Electronic Engineering University of Technology Baghdad, Iraq*
**Corresponding author E-mail: rana_iraq_9999@yahoo.com*

Abstract

Multiple faults is one of the most difficult and an undesired problems of faults indicates that involving two or more faults at the same time in different places on a balanced electric network. The main objective of multiple faults detection, classification and location is satisfy accelerates line restoration, maintains system, stability, repairs the fault, decreases the restoration time and increases the system reliability.

In this paper, the problem of multiple faults detection and diagnosis was studded and analyzed, including fault analysis, detection, classification, and fault sites locating using conventional method. In the first stage the system was analyzed using the conventional method to obtain the voltage and current values to extract the required characteristics of the units. In the second stage, the faults were detected by a comparison between the voltage and current values before and after the fault. In the third stage, faults were classified according to fault conditions. In the fourth stage, fault locations were identified by impedance base method for different types of fault and places were to estimation accurately fault location by analyzing the data available after the beginning of disturbance.

All programs were written in MATLAB environment. The programs were test on IEEE- 11 bus bar network. The results clarified that the conventional method is very effective for multiple faults detection, classification and location. Analyzing this network highlights some of the dangers regions in the system.

Keywords: Multiple faults; multiple fault analysis; fault on transmission line; multiple fault detection ; multiple fault type classification; multiple faults location

1. Introduction

Transmission lines are the lifeblood of the power delivery and crucial parts of electrical power systems as they allow energy to be transported from a group of generating units to load centers and large industrial users beyond the primary distribution lines. The increase in electricity demand during the last decade has led to rapid expansion in the transmission line network making the electrical power system more complex and hence more challenging to operate. When a fault occurs on transmission lines, not detected quickly, corrected the power system's security stability and reliability may be compromised, thereby, influencing the utility's ability to deliver high quality un-interruptible energy to its customers.

Faults can be classified into two types according to the time period [1]

1. Temporary fault: The fault may be still for a very short period and may be removed without damage on the equipment's of the network. This type of fault may occur due to the contact between the conductors because of a heavy wind or a lightning stroke. 2. Permanent faults: fault which produces a complete damage in insulation and equipment's of the network and cannot be used except after replace them and take a long time compared to a temporary fault.

Multiple faults is one of the types of faults and rare occurrences which means the occurrence of two failures in one and continue in one or more sites until the removal of the faults and these faults also result from very bad weather conditions and huge accidents. Most faults occur in transmission, it is very important to detect the fault, classify the fault type and find its location.

Fault detection and classification are important for the effective protection of transmission lines. Fault detection enables faults to be sensed on transmission line by monitoring current and voltage fault of the phases. The current faults value is greater than from current value during normal operation. Fault type classification is an essential protective relaying feature due to its significant effect on the enhancement of relaying scheme operation. The four types of fault are single line to earth faults, line to line faults, line to line to ground faults and three phase faults [2]. Therefore an accurate fault location is an important requirement that computes an estimate of the distance the fault on the transmission line from the point measurement.

The improvement of fault detection, classification and location in transmission lines is an important issue mainly to decrease repair times, restore the service as soon as possible and maintains system stability.

Several investigations have examined the fault location in transmission line.

Charles A. Gross [3] explain how conventional method can be used to calculation multiple fault for unsymmetrical at different locations. D M Gilbert et al. [4] presents an adaptive statistical estimator for the basis of detection and classification of power system faults. Dalsten et al. [5] consists of two modules, one for fault type classification and faulted phase selection and the other for classification of arcing and non-arcing faults was developed. Takagi et al. [6] proposed a fault locator which has been developed, that calculates the reactance of a faulty line with a microprocessor, using the one terminal voltage and current data meas-

Copyright © 2018 Authors. This is an open access article distributed under the Creative Commons Attribution License, which permits unrestricted use, distribution, and reproduction in any medium, provided the original work is properly cited.

urements of the transmission line Jenifer Mariam Johnson1et al.[7] presents a complete protection scheme for detecting, classifying and locating the fault in HVDC transmission lines using support vector machines (SVM).
K.R. Krishnanand et al.[8] proposed scheme is evaluated for current differential protection of a transmission line fed from both ends for a variety of faults for help of the new formulation to provide fault detection ,classification and location with significant accuracy. Qais H. Alsafasfeh et al.[9] proposed a new protective relaying framework to classify and localize faults in an electrical power transmission system is presented. By utilizing principal component analysis (PCA) methods. Thompson Adu et al. [10] proposed a new and developed fault locating system, based on reactance approach and using information from one end of transmission line. FAN Chunju et al. [11] proposed the adaptive fault location technique based on Phasor Measurement Unit (PMU) for transmission line .Voltage and current phasors of both terminals of the transmission line are obtained through PMU. Recioui[12] proposed the K-Nearest Neighbors for detection, classification and location of power system faults.
In this work a conventional method is adopted for detect, classify, and locate symmetrical and unsymmetrical of multiple faults in transmission lines.

2. Multiple Fault Analysis

The fault analysis includes the distribution of voltage and current in the system during the duration of the fault. It is very important to determine the values of the voltages and currents of the system during the conditions of faults that help on detect and classify faults for the purpose of identifying and regulating protection devices to isolate the idle part of the system to reduce the resulting damage. A three-phase power system may be modeled as three single-phase symmetrical component or "sequence" electrical networks, described by

$$\left.\begin{array}{ll} v_0 = -[Z_0]\ I_0 & 1A \\ v_1 = E_1 - [Z_1]\, I_1 & 1B \\ v_2 = -[Z_2]\ I_2 & 1C \end{array}\right\} \quad (1)$$

Where v_0, v_1, and v_2 are (n $\boldsymbol{x}$ 1) sequence phasor voltage vectors
I_0, I_1, and I_2 are (n $\boldsymbol{x}$ 1) sequence phasor current vectors
E_1 is Pre-fault positive sequence voltage vector (n $\boldsymbol{x}$ 1)
$[Z_0]$, $[Z_1]$ and $[Z_2]$are (n $\boldsymbol{x}$ n) sequence impedance matrices (commonly called "Z bus").
n = number of busses (nodes) in the system.
all values in per-unit.
Defining faults is straight forward. For purposes of discussion, consider a single line to ground fault at bus i and a phase-to-phase fault at bus j. From equation (1). Z_{012} can be formulated as:

$$[Z_{012}] = \begin{bmatrix} z_{ii}^0 & 0 & 0 & z_{jj}^0 & 0 & 0 \\ 0 & z_{ii}^1 & 0 & 0 & z_{jj}^1 & 0 \\ 0 & 0 & z_{ii}^2 & 0 & 0 & z_{jj}^2 \\ z_{ji}^0 & 0 & 0 & z_{jj}^0 & 0 & 0 \\ 0 & z_{ji}^1 & 0 & 0 & z_{jj}^1 & 0 \\ 0 & 0 & z_{ji}^2 & 0 & 0 & z_{jj}^2 \end{bmatrix} \quad (2)$$

Where $[Z_{012}]$ is sequence impedance matrix and formulated from entries from $[Z_0]$, $[Z_1]$ and $[Z_2]$.then:

$$[Z_{abc}] = [\acute{T}]^{-1}[Z_{012}][\acute{T}] \quad (3)$$

$$[\acute{T}] = \begin{bmatrix} [T] & [0] \\ [0] & [T] \end{bmatrix}$$

$$[T] = \begin{bmatrix} 1 & 1 & 1 \\ 1 & a^2 & a \\ 1 & a & a^2 \end{bmatrix}$$

Where $[Z_{abc}]$ is phase impedance matrix and T is symmetrical components transformation matrix.
Likewise**:**

$$[E_{abc}] = [T][0 \quad 1 \quad 0 \quad 0 \quad 1 \quad 0]^t = [1 \quad a^2 \quad a \quad 1 \quad a^2 \quad a]^t \quad (4)$$

$$[V_{abc}] = [V_i^a \quad V_i^b \quad V_i^c \quad V_j^a \quad V_j^b \quad V_j^c]^t \quad (5)$$

$$[I_{abc}] = [I_i^a \quad I_i^b \quad I_i^c \quad I_j^a \quad I_j^b \quad I_j^c]^t \quad (6)$$

Where $[E_{abc}]$ is the phase internal voltages of synchronous machine, $[V_{abc}]$ is the phase terminal voltages vector and $[I_{abc}]$ is the phase current vector.
Finally

$$E_{abc} - V_{abc} = U_{abc} = [Z_{abc}]\, I_{abc} \quad (7)$$

Where U_{abc} is the phase voltage change between synchronous machine and bus bar .

3. Representation of Fault on the Transmission Lines

The system has a bus impedance/admittance matrix of dimension nxn. The bus admittance matrix before fault takes the form

$$[Y_{bus}\ \text{before fault}] = \begin{bmatrix} y_{11} & \cdots & y_{1k} & \cdots & y_{1n} \\ . & . & . & . & . \\ y_{k1} & \cdots & y_{kk} & \cdots & y_{kn} \\ . & . & . & . & . \\ y_{n1} & \cdots & y_{nk} & \cdots & y_{nn} \end{bmatrix} \quad (8)$$

Where $[Y_{bus}\ \text{before fault}]$ is the bus admittance before fault matrix, k is one of busses and n is number of busses in the system. If fault occurs on the line that connect two buses k & n , an imaginary bus will be generated to be .Remove all link between bus k and bus n
The bus admittance matrix after fault takes the form

$$[Y_{bus}^{`}\ after\ fault] = \begin{bmatrix} y_{11}^{`} & \cdots & y_{1k}^{`} & \cdots & y_{1n}^{`} & y_{1f}^{`} \\ . & . & . & . & . & . \\ y_{k1}^{`} & \cdots & y_{kk}^{`} & \cdots & y_{kn}^{`} & y_{kf}^{`} \\ . & \cdots & . & \cdots & . & . \\ y_{n1}^{`} & \cdots & y_{nk}^{`} & \cdots & y_{nn}^{`} & y_{nf}^{`} \\ y_{f1}^{`} & \cdots & y_{fk}^{`} & \cdots & y_{fn}^{`} & y_{ff}^{`} \end{bmatrix} \quad (9)$$

Where $[Y_{BUS}^{`}\ after\ fault]$ is the bus admittance matrix after fault
$y_{kk} = y_{kk} - \left(Z_{line\,kn}^{-1}\right) + \left(Z_{line\,kn}^{-1}/\ m_1\right)$
m_1 =lengths from each bus (K) to the fault point (f)
$y_{kn}^{`} = y_{nk}^{`} = 0$
$y_{kf}^{`} = y_{fk}^{`} = -(Z_{line\,kn}^{-1}/\ m_1)$
$y_{f1}^{`} = y_{1f}^{`} = 0$
$y_{fn}^{`} = y_{nf}^{`} = -(Z_{line\,kn}^{-1}/\ m_2)$
m_2=lengths from each bus (n) to the fault point (f) = (1- m_1)
$y_{ff}^{`} = (Z_{line\,kn}^{-1}/\ m_1) + \left((Z_{line\,kn}^{-1}/\ m_2)\right) + (Z_{line\,kn}^{-1})$

4. Mathematical Model

A. Fault Detection

The undesired change is detected in system parameters that degrade of performance by monitoring the phase impedances and/or phase-current amplitudes and/or phase-voltage amplitudes and/or zero-

sequence current amplitude. It is difference between pre-fault measurement and fault measurement as shown:

If

$$V_{bus}(0) = \begin{bmatrix} V_1(0) \\ V_k(0) \\ V_n(0) \end{bmatrix} \quad (10)$$

Where $V_{bus}(0)$ is the prefault voltages obtained from power flow solution.

And

$$\Delta V_{bus} = \begin{bmatrix} \Delta V_1 \\ \Delta V_k \\ \Delta V_n \end{bmatrix} \quad (11)$$

Where ΔV_{bus} is the bus voltage changes caused by the fault. Then :

$$V_{bus}(f) = V_{bus}(0) + \Delta V_{bus} \quad (12)$$

$V_{bus}(f)$ is the voltages during the fault. Which lead to:

$$\begin{bmatrix} 0 \\ \vdots \\ I_k(f) \\ \vdots \\ 0 \end{bmatrix} = \begin{bmatrix} y_{11} & \cdots & y_{1k} & \cdots & y_{1n} \\ . & . & . & . & . \\ y_{k1} & \cdots & y_{kk} & \cdots & y_{kn} \\ . & . & . & . & . \\ y_{n1} & \cdots & y_{nk} & \cdots & y_{nn} \end{bmatrix} \begin{bmatrix} \Delta v_1 \\ . \\ \Delta v_k \\ . \\ \Delta v_n \end{bmatrix} \quad (13)$$

Where I_{bus} is the bus current entering the bus and Y_{bus} is the bus admittance matrix.

B. Fault Classification

Fault classification used in electric power system is important for protection operation of power systems and have to be accurate to facilitate quick repair of the system. The fault classification is based on detecting distinct magnitude of current phase and zero component current [13].

1- if one phase : SLG (Single Line to Ground)

ag: Ia=value , Ib=Ic=0

bg: Ib=value , Ia=Ic=0

cg: Ic=value , Ia=Ib=0

2- if two phase :

i. L-L (Line to Line) , I_{a0} =0

ab : Ia= - Ib = value , Ic=0, I_{a0} =0

bc : Ib= - Ic = value , Ia=0, I_{a0} =0

ca: Ic= - Ia = value , Ib=0, I_{a0} =0

ii. DLG (Double Line to Ground) , I_{a0} = value

abg : Ia= - Ib = value , Ic=0, I_{a0} = value

bcg : Ib= - Ic = value , Ia=0, I_{a0} = value

cag: Ic= - Ia = value , Ib=0, I_{a0}= value

3- if three phase : 3 Φ

a b c: Ia =Ib =Ic = value, I_{a0}=0, I_{a2} = 0

C. Fault Location

Fault location on transmission lines is one of important problems which must be studied to help engineers and researchers to find out and identification the location of fault. It is done using impedance based method. Impedance based method is one of methods that developed to detect fault point .The basic principle of impedance based method on relation between the measured impedance ,estimated from voltage and current of the fault and the fault location. The impedance based methods can be classified into two types: 1) one – end data methods and 2) two – end data methods.

One – end data algorithms is known that one end impedance based fault locaters calculate the measured impedance to fault with the use of data from local end only. In the work, one-end data methods are adopted to find multiple fault location. Single-line diagram of fault on transmission lines between two buses is shown in fig. (1) where:

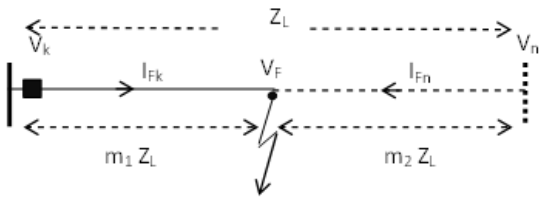

Fig. 1:. One-line diagram and equivalent circuit of fault on transmission lines between two buses

(V_k) refers to sending end bus-bar voltage, (V_n) refers to receiving end voltage, (I_{Fk}) and (I_{Fn}) refer to fault currents from sending end and receiving end respectively, and (Z_L) represents the entire line impedance. Fig. (2) illustrates the equivalent circuit for a fault on transmission line

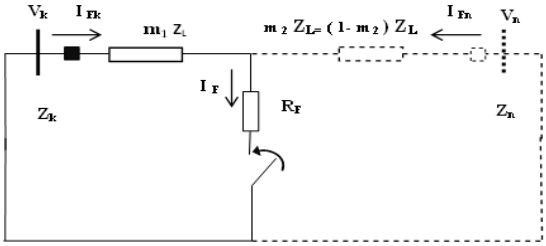

Fig .2:. Equivalent circuit for a fault on transmission line

The voltage drop from bus (k) can be written easily along with the per unit fault location (m_1):

$$V_k = m_1 Z_L I_{Fk} + R_F I_F \quad (14)$$

The value of the impedance measured at terminal (k) may be found by dividing equation (14) by the measured current (I_{Fk}).

$$Z_{Fk} = \frac{V_k}{I_{Fk}} = m_1 Z_L + R_F \frac{I_F}{I_{Fk}} \quad (15)$$

Where (Z_{Fk}) is the apparent impedance to the fault measured at terminal (k).

If the fault resistance is assumed to be zero, we can use one of the impedance calculations in Table (1) to estimate fault location.

Table (1): Apparent impedance for different fault types

Fault Type	Apparent Impedance
a-g	$V_a / (I_a + k .3I_0)$
b- g	$V_b / (I_b + k.3I_0)$
c- g	$V_c / (I_c + k.3I_0)$
a-b or a-b- g	V_{ab} / I_{ab}
b-c or b-c-g	V_{bc} / I_{bc}
c-a or c-a-g	V_{ca} / I_{ca}
a-b- c	V_{ab} / I_{ab} or V_{bc} / I_{bc} or V_{ca} / I_{ca}

Where:

K is $(Z_{0L} – Z_{1L}) / 3 Z_{1L}$

Z_{1L} is the positive –sequence line impedance

Z_{0L} is the zero-sequence line impedance

I_0 is the zero-sequence fault current

m_1 is the per unit distance to fault (for example: distance to fault in kilometers divided by the total line length in kilometers)

5. The Structure of the Proposed Diagram

A program was written in MATLAB environment for the detection and classification and finds the location of multiple faults. The input data was calculated by a Newton -Raphson load flow program and considered as the initials values. The proposed method is described as follows:

Step 1: Input data of power transmission system including all the line data, bus data and G&T data

Step 2: Run the load flow program to calculate the initial values of currents and voltages

Step 3: Building Z-Bus programs which are needed as shown as fig.3

Step 4: run multiple fault analysis programs as shown as fig.4

Step 5: compare current value before and after fault.

Step 6: fault detection, classification and location based on magnitude of current and zero-sequence fault current

Step 7: fault location using impedance based method

End

Fig.5. shows the flow chart of the main program for multiple fault detection , classification and location.

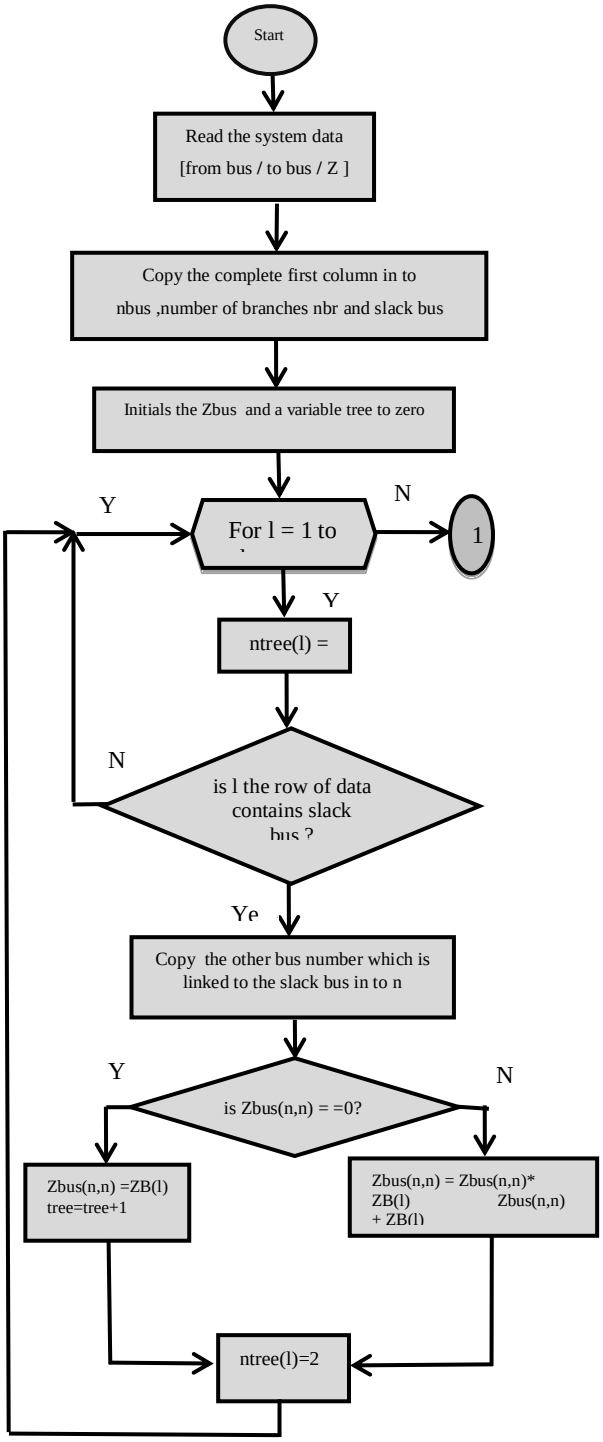

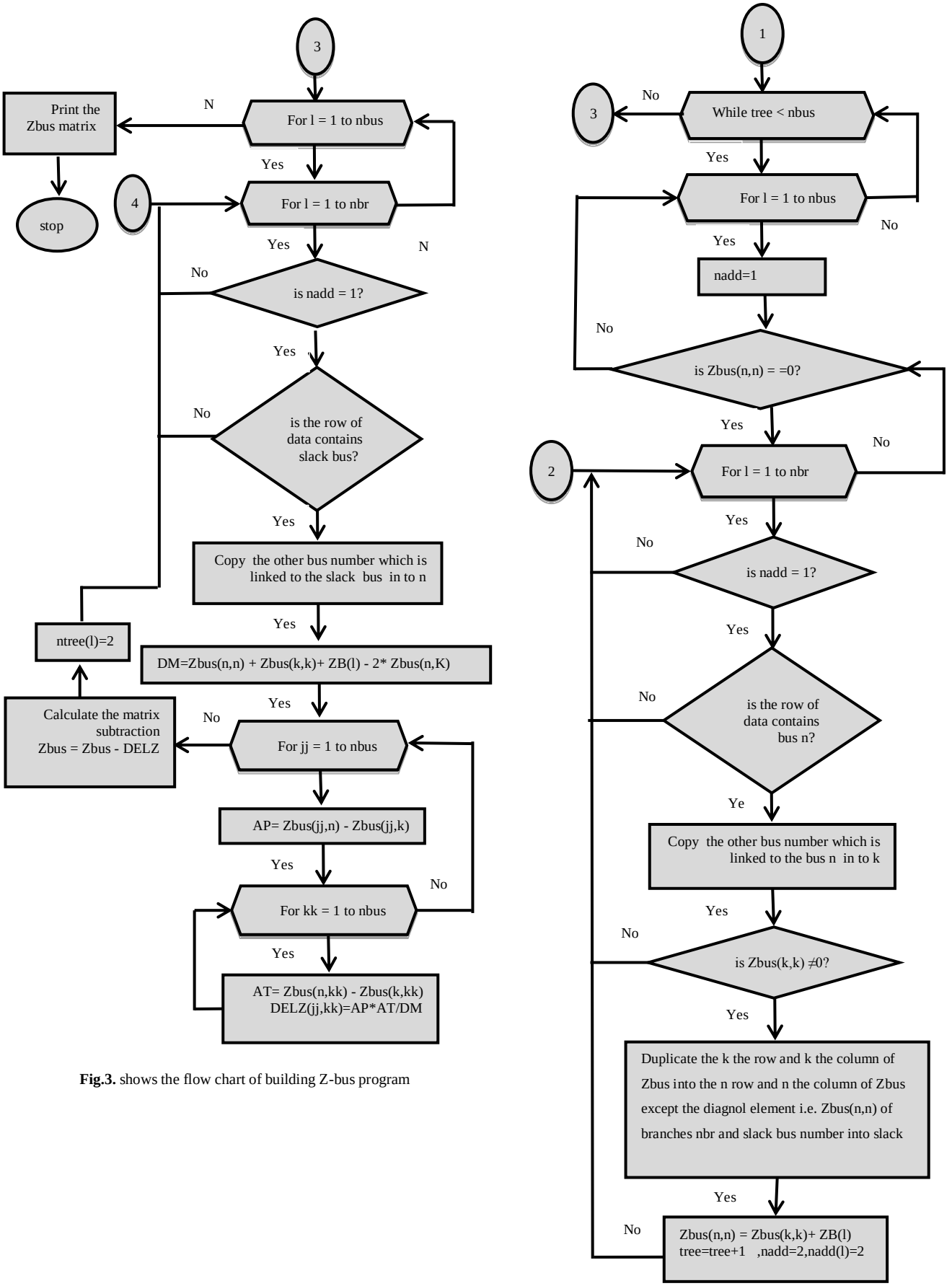

Fig.3. shows the flow chart of building Z-bus program

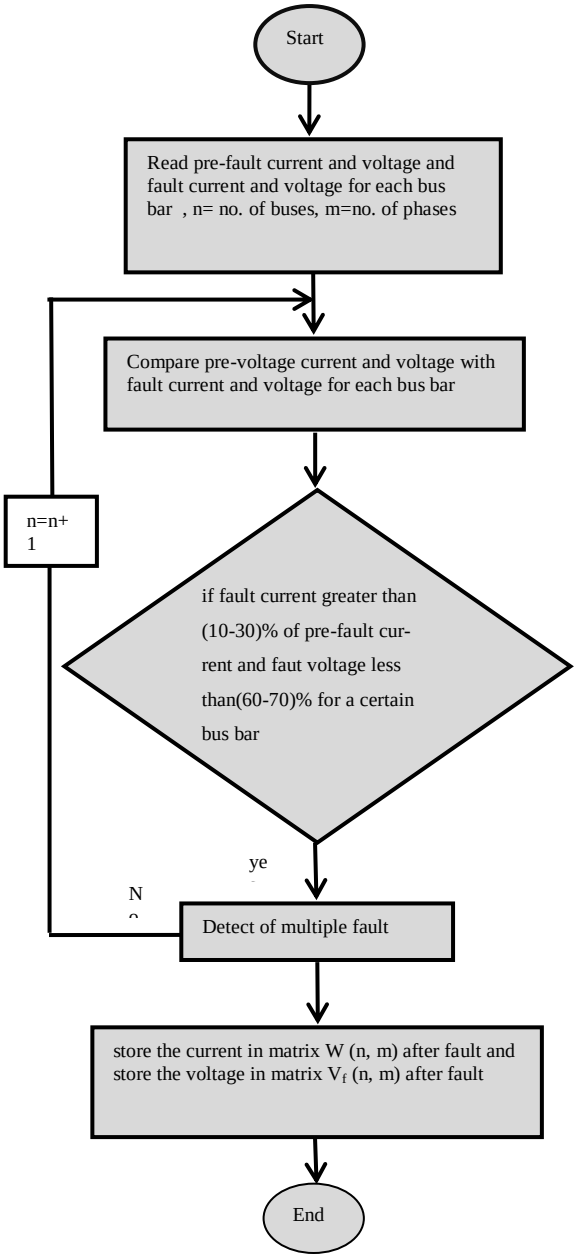

Fig.4:. shows the flow chart of run multiple faults

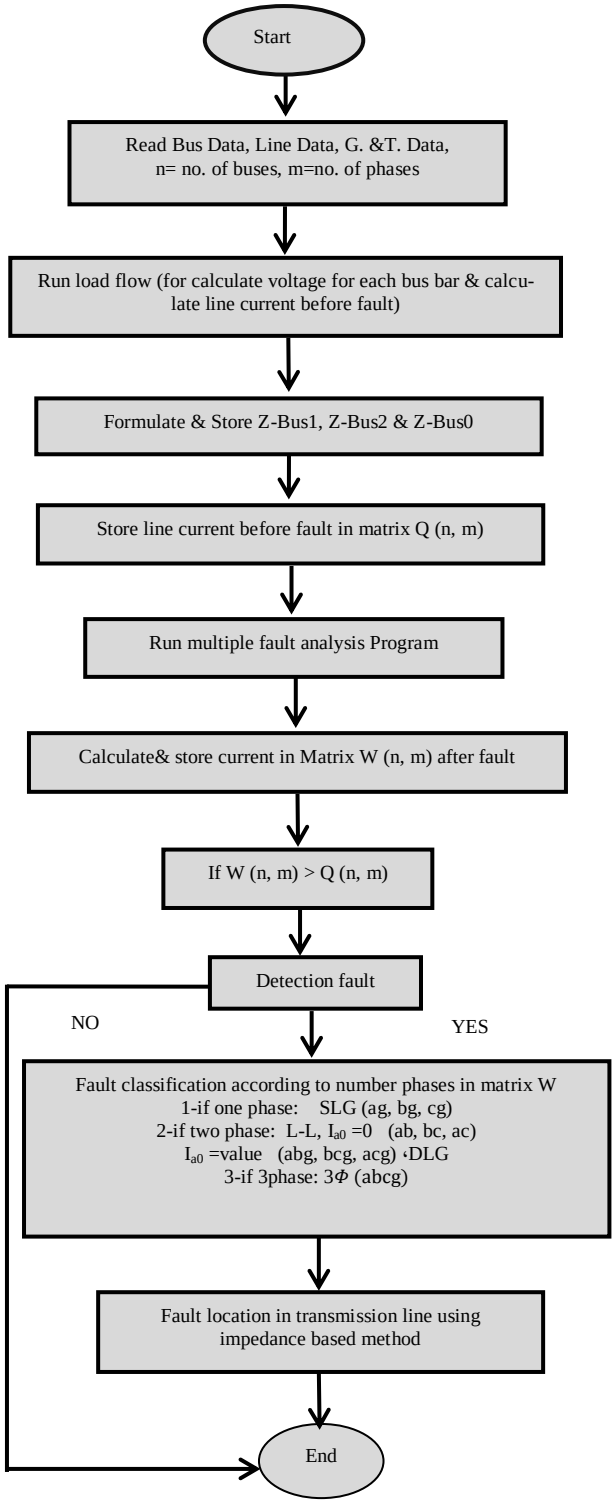

Fig.5. shows the flow chart of the main program

Case study

To verification of the proposed program accuracy and methodology are an important task in order to create a reliable tool for calculation, the program was applied on the IEEE 11- bus test system. The system consists of 11 bus and 14 transmission line. The parameter of the system in per-unit and the single line diagram of this system is shown in "Fig. 6," and its data are explained in the appendix (A).

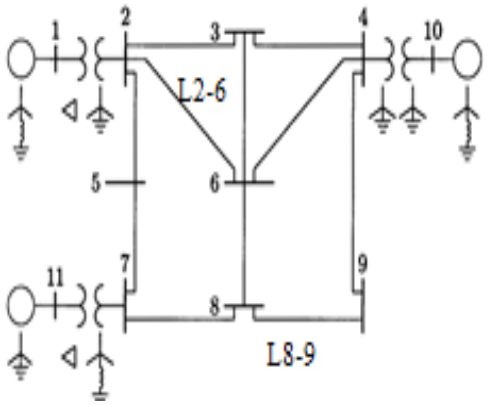

Fig.6. Single line diagram of 11-bus power system

Table-1 shows Power Flow Solution by Newton-Raphson program.

Table (1): Power Flow Solution by Newton-Raphson Method

Bus	Voltage	Angle	-----Load----		Generation-		Injected
No.	Mag.	Degree	MW	Mvar	MW	Mvar	Mvar
1	1.04	0	0	0	240	211.4	0
2	1.028	-0.77	0	0	0	0	0
3	1.004	-2.26	150	120	0	0	0
4	1.024	-0.59	0	0	0	0	0
5	1.02	-1.41	120	60	0	0	0
6	1	-2.59	140	90	0	0	0
7	1.021	-0.43	0	0	0	0	0
8	0.993	-2.77	110	90	0	0	0
9	0.99	-3.17	80	50	0	0	0
10	1.035	0.278	0	0	200	147.6	0
11	1.03	0.447	0	0	160	92.91	0
Total			600	410	600	451.94	0

When two faults occur on transmission lines to make sure the accuracy of the program, Single line to ground (b-g) fault on transmission line (L2-6) and line to line (a-b) on transmission line (L8-9) .The single line diagram of multiple fault of transmission lines is shown in "Fig. 7,"

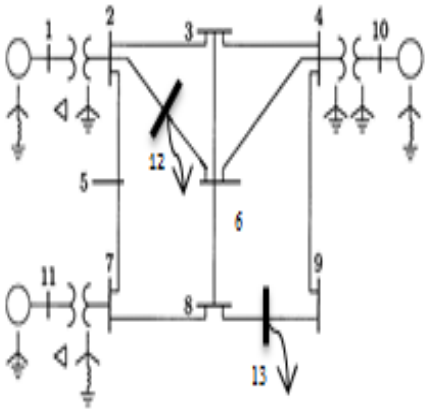

Fig.7:. Single line diagram of multiple faults of transmission lines

Table 2 show value of fault current on fault location (point 12,point13) at transmission lines (L2-6) and (L8-9).

Table 3,4 show comparisons of bus bar voltages (amplitude and phase) and transmission line currents, respectively, before and after the occurrence of the unsymmetrical multiple faults on transmission lines (L2-6) and (L8-9).

Fig .8 show the results given by a matlab simulation from the fault detection, classification and location on transmission line (L2-6) and (L8-9).

Multiple fault detection , classification fault B-G on transmission line (L2-6) and (A-B) on transmission line (L8-9) and location on transmission line (L2-6) and (L8-9) .The actual location on transmission line (L2-6) and (L8-9) is 0.3 and 0.7 respectively. The estimation location (m1,m2) is 0.3005 and 0.6970 respectively. The error of fault location (er1,er2) is -0.0481and 0.2982 respectively.

$$\%\text{error} = \frac{|\text{actual fault location} - \text{estimated fault location}|}{\text{total system length}} * 100 \quad (16)$$

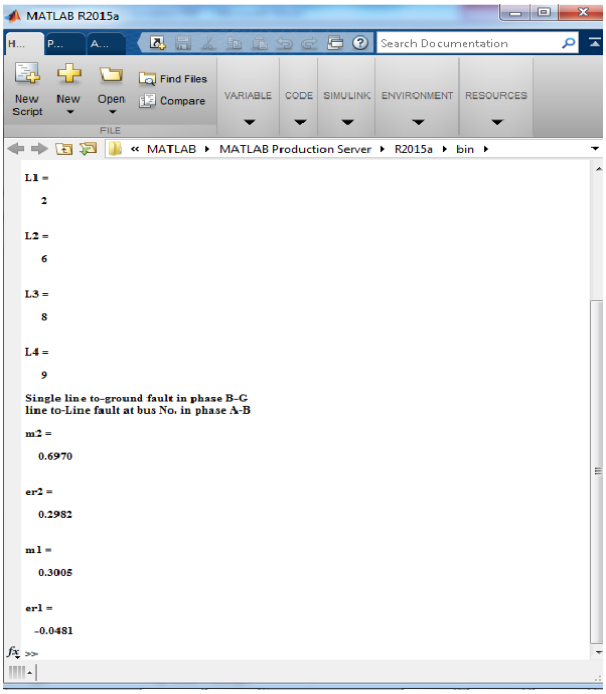

Fig.8. results given by matlab program

Table 2: fault current on fault location at transmission lines (L2-6) and (L8-9).

Bus No.	Bus current fault					
	a		b		c	
	Current Mag.	Angle Degree	Current Mag.	Angle Degree	Current Mag.	Angle Degree
12	0.1240	12.7513	3.6814	155.6795	0.0322	-114.3205
13	1.7043	-67.0893	1.7043	112.9107	0.0397	65.6795

Table 2: fault current on fault location at transmission lines (L2-6) and (L8-9).

Bus No.	Bus current fault					
	a		b		c	
	Current Mag.	Angle Degree	Current Mag.	Angle Degree	Current Mag.	Angle Degree
12	0.1240	12.7513	3.6814	155.6795	0.0322	-114.3205
13	1.7043	-67.0893	1.7043	112.9107	0.0397	65.6795

Table 3: Comparison of voltages of an unsymmetrical multiple faults on transmission lines (L2-6) and(L8-9)

bus	before fault		when fault at two transmission lines (L2-6) and (L8-9) [after fault]					
			a		b		c	
no.	Voltage Mag.	Angle Degree	Voltage Mag.	Angle Degree	Voltage Mag.	Angle Degree	Voltage Mag.	Angle Degree
1	1.04	0	0.9198	-10.1117	0.7083	-117.832	0.9752	126.1155
2	1.028	-0.772	0.889	-9.3675	0.5411	-115.3388	0.9741	126.0244
3	1.004	-2.26	0.8376	-6.2516	0.5173	-108.9468	0.9729	125.2291
4	1.024	-0.587	0.8613	-6.2439	0.6919	-112.3946	1.0033	122.1167
5	1.02	-1.413	0.8681	-8.2878	0.5735	-112.9362	0.9725	125.9959
6	1	-2.588	0.8034	-5.376	0.3591	-100.0491	0.9874	123.736
7	1.021	-0.425	0.8425	-8.0264	0.6867	-111.9214	0.9912	122.8071
8	0.993	-2.765	0.6295	-14.3066	0.4503	-84.7386	0.9655	124.4917
9	0.99	-3.174	0.453	-32.3457	0.4706	-56.711	0.9577	124.6385
10	1.035	0.278	0.9295	-4.3783	0.8138	-116.6374	1.0225	120.5839
11	1.03	0.447	0.8944	-7.4618	0.8093	-116.0022	0.9973	122.2405
12			0.8868	-3.6380	0.0009	-118.0661	1.0219	118.7077
13			0.4534	-47.8972	0.4442	-47.2266	0.9633	121.2568

Table 4: Comparison of currents of a symmetrical multiple faults on transmission lines (L2-6) and (L8-9)

Bus No.	Bus No.	Line current before fault						Line current after fault(on (L2-6) and (L8-9))					
		a		b		c		a		b		c	
		Current Mag.	Angle Degree	Current Mag.	Angle Degree	Current Mag.	Angle Degree	Current Mag.	Angle Degree	Current Mag.	Angle Degree	Current Mag.	Angle Degree
1	2	0.3076	-138.6202	0.3076	101.3798	0.3076	-18.6202	1.0487	-56.6426	1.8999	138.932	0.9332	-23.5071
2	3	0.1192	-136.0462	0.1192	103.9538	0.1192	-16.0462	0.22	-131.2033	0.1979	80.0488	0.0243	64.3591
2	5	0.0947	-142.7078	0.0947	97.2922	0.0947	-22.7078	0.1894	-144.0794	0.2464	14.9083	0.0246	130.4112
2	6	0.094	-137.7683	0.094	102.2317	0.094	-17.7683	-	-	-	-	-	-
2	12 *	0	0	0	0	0	0	0.3884	-60.5776	3.0673	154.5959	0.2156	78.6581
6	12*	0	0	0	0	0	0	0.2391	42.5569	0.8881	174.2336	0.0743	91.5849
3	4	0.0892	35.3779	0.0892	-84.6221	0.0892	155.3779	0.0847	114.1489	0.3493	-33.3417	0.1989	153.7382
3	6	0.0166	-147.0635	0.0166	92.9365	0.0166	-27.0635	0.1223	-73.6953	0.3493	139.3281	0.0088	-23.7741
4	6	0.0706	-145.0056	0.0706	94.9944	0.0706	-25.0056	0.1264	-75.9572	0.5161	143.6257	0.1215	-26.2942
4	9	0.0805	-141.9345	0.0805	98.0655	0.0805	-21.9345	0.717	-72.2484	0.8159	115.0636	0.097	156.749
4	10	0.2402	36.1653	0.2402	-83.8347	0.2402	156.1653	0.9272	107.8295	1.6748	-49.0979	0.4155	156.749
5	7	0.0411	6.0835	0.0411	-113.9165	0.0411	126.0835	0.0618	-126.969	0.2432	-16.2655	0.1552	145.2372
6	8	0.0175	-108.8682	0.0175	131.1318	0.0175	11.1318	0.3797	-74.9827	0.2772	62.3501	0.0361	116.3838
7	8	0.1429	-143.6815	0.1429	96.3185	0.1429	-23.6815	0.6904	-76.4019	0.9528	120.5983	0.1708	-19.8689
7	11	0.1796	29.7025	0.1796	-90.2975	0.1796	149.7025	0.7171	112.6728	1.0635	-52.8999	0.41	152.9352
8	9	0.0154	-160.0585	0.0154	79.9415	0.0154	-40.0585	-	-	-	-	-	-
8	13*	0	0	0	0	0	0	1.0511	-60.0959	0.8618	116.0395	0.1694	124.8345
9	13*	0	0	0	0	0	0	0.8653	-40.0057	0.5428	147.5631	0.3819	128.4192

* Before fault not connected between [buses (2) and imaginary bus (12)], [buses (6) and imaginary bus (12)], [buses (8) and imaginary bus (13)], and [buses (9) and imaginary bus (13)]. Assumed imaginary bus bar to calculate fault in transmission lines

6. Conclusions

The problem of multiple fault detection , classification and location in power system great importance for the economics and power quality of the power systems. It provides the essential continuity of service for reliable transmission .The importance of accurate fault location is increasing for fast repair and power system restoration. In this work, a conventional method using current and voltage values comparisons has been presented. The obtained results show the effectiveness and the accuracy of this method for multiple fault detection, classification and location.

References

[1] D. Beeman, " Industrial Power Systems Handbook", McGraw-Hill, (A book), 1955.

[2] J. Lewis Blackburn, Protective Relaying Principles and Applications, Second Edition

[3] Charles A. Gross, "Fault Calculations in Power Systems Subject to Multiple Faults," IEEE Trans. on Power Delivery, pp. 598 – 601, 1990.

[4] D M Gilbert and I F Morrison," A statistical method for the detection of power system faults", Electrical Power & Energy Systems, Vol. 19, No. 4, pp. 269-275, 1997.

[5] Dalsten, B.Kulicke : "Neural Network Approach to Fault Type Classification For High Speed Protective Relaying" , IEEE Transactions On Power Delivery , vol. IO , No. 2 , April 1995 .

[6] T. Takagi,Y. Yamakoshi, M. Yamaura, R. Kondow and T. Matsuskima, "Development of a New Type Fault Locator Using The One-Terminal Voltage and Current Data", IEEE Transactions on Power Apparatus and Systems, Vol. PAS -101, No. 8, , pp. 2892 - 2897,August 1982.

[7] Jenifer Mariam Johnson, Anamika Yadav ,"Complete protection scheme for fault detection, classification and location estimation in HVDC transmission lines using support vector machines", IET Science, Measurement & Technology, 2017, Vol. 11 Iss. 3, pp. 279-287

[8] K.R. Krishnanand, P.K. Dash and M.H. Naeem," Detection, classification, and location of faults in power transmission lines", Electrical Power and Energy Systems 67, pp. 76–86, 2015 .

[9] Qais H. Alsafasfeh, Ikhlas Abdel-Qader, Ahmad M. Harb," Fault Classification and Localization in Power Systems Using Fault Signatures and Principal Components Analysis" , Energy and Power Engineering, 4, pp.506-522, 2012.

[10] Thompson Adu "A New Transmission Line Fault Locating System " ,IEEE Transactions on Power Delivery, Vol. 16, No. 4,October 2001.

[11] FAN Chunju ,DU Xiuhue, LI Shengfang, "An Adaptive Fault Technique Based on PMU for Transmission Line" ,IEEE Power Engineering Society General Meeting , pp. 1 - 6 ,2007.

[12] A. Recioui, B. Benseghier and H. Khalfallah," Power System Fault Detection, Classification and Location Using the K- Nearest Neighbors", IEEE International Conference on Electrical Engineering ,pp.1– 6,2015.

[13] Hadi Saadat, "Power System Analysis", McGraw-Hill International Editions, Book, 1999.

Appendix A

Table A.1: Bus –Data for 11-line network

Injected	Gen Mvar		Gen		Load		Ang	|V|	Bus	Bus
Mvar	Max	Min	Mvar	MW	Mvar	MW	Deg	p.u.	code	No.
0	0	0	0	0	0	0	0	1.04	1	1
0	0	0	0	0	0	0	0	1	0	2
0	0	0	0	0	120	150	0	1	0	3
0	0	0	0	0	0	0	0	1	0	4
0	0	0	0	0	60	120	0	1	0	5
0	0	0	0	0	90	140	0	1	0	6
0	0	0	0	0	0	0	0	1	0	7
0	0	0	0	0	90	110	0	1	0	8
0	0	0	0	0	50	80	0	1	0	9
0	180	0	0	200	0	0	0	1.035	2	10
0	120	0	0	160	0	0	0	1.03	2	11

Table A.2: Line –Data of the 11-Line network

B/2	R0 p.u.	X0 p.u.	R1 p.u.	X1 p.u.	Bus no.	Bus no.
0	0.6	0	0.06	0	2	1
0.0004	0.6	0	0.3	0	3	2
0.0002	0.3	0	0.15	0	5	2
0.0005	0.9	0	0.45	0	6	2
0.0005	0.8	0	0.4	0	4	3
0.0005	0.8	0	0.4	0	6	3
0.0008	1	0	0.6	0	6	4
0.0009	1.1	0	0.7	0	9	4
0	0.08	0	0.08	0	10	4
0.0003	0.8	0	0.43	0	7	5
0	0.95	0	0.48	0	8	6
0.0004	0.7	0	0.35	0	8	7
0	0.1	0	0.1	0	11	7
0	0.9	0	0.48	0	9	8

Table A.3: G.T-Data for 11-line network

Bus No.	R0 p.u.	X0 p.u.	R1 p.u.	X1 p.u.	Xn p.u.
1	0	0.2	0	0.06	0.05
10	0	0.15	0	0.04	0.05
11	0	0.25	0	0.08	0