International Journal of Engineering & Technology, 7(4.16) (2018) 10-12

International Journal of Engineering & Technology

Website: www.sciencepubco.com/index.php/IJET

Research paper



Characterization of Biceps Brachii Muscle Contraction Using Electromyogram Sensor for Virtual Manufacturing Process

Gandjar Kiswanto*, Rachmad Mochammad Suryantoro, Adjeng Ayu Setiani, Dody Rakhmat Ramadhan, Ferdiansyah Zhultriza, Muhammad Fathin Juzar

Department of Mechanical Engineering, Universitas Indonesia, Depok 16424, Indonesia
**Corresponding author E-mail:gandjar_kiswanto@eng.ui.ac.id*

Abstract

For the product development process, producers applied a variety of ways to make their products respond to market needs, with a shift in consumer trends that want more specific products, engineers begin to develop new methods to produce an efficient, time-cost, able to accommodate it well, manufacturers can minimize or completely eliminate the phases of physical prototyping, which impact on both cost and time efficiency, now the Virtual Manufacturing process uses more Virtual Reality, and this has an impact on more artificial processes this paper the researcher tries to combine the method of Virtual Manufacturing by using a camera and sensor based Electromyogram to measure the level of contraction of the hand when using the Virtual Manufacturing program. The researcher's focus on this paper is about to know the character of biceps brachii muscle contraction in some conditions, that will be utilized in the process of Virtual Manufacturing.

Keywords: *Computer-Aided Design, Electrode, Electromyogram, Manufacture, Virtual Manufacturing*

1. Introduction

The development of technology nowadays offers many sophisticated things that we can use every day. Engineers develop tools aimed at facilitating human life in everyday activities, everything becomes easier to understand, more concise and offers better efficiency and timeliness.

Along with the development of technology in this era, all aspects of human life also changed to a higher stage. Some technologies that were originally considered impossible to apply, now we can find it in our daily lives. As an example of the Virtual Manufacturing process, Manufacturing is one of the most important industrial sectors, recorded in the United States in 2010 to 2013, growth of 4.3% and in Europe the Manufacturing sector accounts for 28% of total GDP [1]. Virtual Manufacturing offers more efficient methods, both in manufacturing design, planning, and prototyping [2].The manufacturing industry massively develops method that can produce better results of accuracy and speed in production, which will ultimately improve the efficiency of the company. Increased efficiency in the manufacturing process will affect the price of a product that will be sold to the consumers [3].

2. Virtual Manufacturing and Electromyogram Sensor

I. Virtual Manufacturing

Virtual Manufacturing is built on the basis of CAD drawings (Computer-Aided Design), which displays parts or components that can be assembled together. By utilizing computer program simulations with some parameters required in the design development process, simulations can be run without making a prototype physical print first, while for revision and design improvements can be done by changing CAD and test parameters only, so more efficient both in time and cost [4]. Virtual Manufacturing can explain in more detail about the relationship between operator and machine, where this becomes one of the focus of this research. In general, the application of Virtual Prototyping using VR (Virtual Reality) device used for object representation of Virtual Prototyping process, but in this experiment used another method, using Projector to display the simulation of Virtual Manufacturing, then Camera to capture user gestures, and Myogram based Sensors to measure muscle contraction of users. The use of Myogram in this experiment is intended to record muscle activity during the Virtual Prototyping process, since the use of Myogram is currently used not only in the medical aspects, but many aspects can apply Myogram [5]. The use of Virtual Manufacturing methods without applying Virtual Reality is expected to be a solution for human interaction with virtual objects displayed in the manufacturing process to be more real and economical without sacrificing the accuracy of the results of the Virtual Manufacturing process.

II. Electromyogram Sensor

In general, Electromyogram is a device used to record the electrical activity of living muscles, so that the tool can determine the condition of the muscle in the active state of contraction or in static conditions. EMG utilizes electrodes attached to the user's skin, which aims to determine the voltage difference (delta V) produced by muscle contraction.

Copyright © 2018 Authors. This is an open access article distributed under the Creative Commons Attribution License, which permits unrestricted use, distribution, and reproduction in any medium, provided the original work is properly cited.



Figure 2.1 Electromyogram Sensor, Bipolar Electrode, and Reference Electrode Placement

Electromyography (EMG) is a technique in which it includes reading, recording and analysis of myoelectric signals, myoelectric signals consisting of several physcological variations of the muscle membrane. Unlike Neurological EMG, which analyzes the response of muscle membranes under static conditions, this thesis report focuses more on Kinesiological EMG observations, where observations of neuromuscular activity are performed during activity conditions. [6] Signals detected on the surface of the skin of living things are very low, in the amount of milli-volt (mV), so it needs to do signal amplification, which is called the amplification process. Characteristics of EMG signals have a frequency range between 20Hz – 500Hz. While the voltage range depends on V input (V source).This Experiment use bipolar myogram electrode, which consists of two electrodes attached to the body to be observed changes in muscle contraction, while one electrode to reference of the measurement is placed on the non-contracting body part.

3. System Modelling

To obtain this sample test, the researcher used a Myoware Muscle Sensor electromyogram sensor, type AT-04-001, 3-lead / electrode in use, with 2 electrodes functioning as a muscle contraction detector Biceps Brachii (bipolar electrode), and one electrode attached to the non-contracting part of the body as a reference. This sensor is also equipped with built-in amplifier and rectifier, so the resulting signal is not in RAW shape.

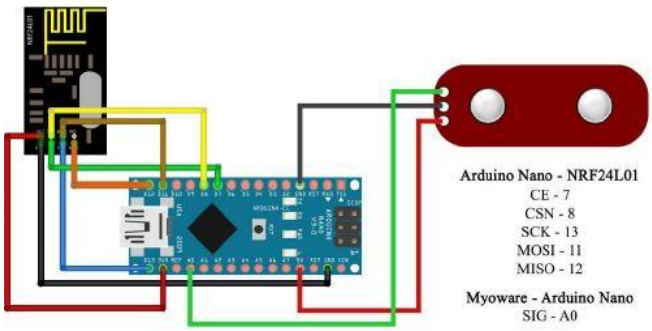

Figure 3. 1 Schematic Diagram for Electromyogram Sensor

The test is started by measuring weight and height of each individual testers first, then preparing the process of electrode installation on the biceps individual muscle by previously cleaning the body parts that will be affixed electrode using alcohol swab, after that the tester performs the test after myoware can be connected to the computer so the data can be acquired by computer. There are 6 load testing variables on each individual, each in relaxed conditions, 1kg, 2kg, 3kg, 4kg, and 5kg. Each individual must hold the dumbell for 20 seconds, and has a 5 minute of interval to reduce muscle fatigue in each individual, and the lift angle of data retrieval is 90 degrees. For the sensing electrode positioning location itself is determined by approximately 4 cm distance from the elbow fold position, then for the placement of the reference electrode, is placed on the inner arm, because the inner arm does not contract significantly when the hand moves, and the position of Reference Electrode doesnt distract the movement of individual during the data acquitition process. Body Mass Index (BMI), also used as a parameter for this research, BMI is a formula that can describe the ratio of body weight to the height of the body. In previous studies, BMI showed a strong correlation in some parts of the human body muscles [7], using simple parameters of height and weight to determine the BMI classification, BMI itself consisted of 4 classifications, with the following classification limitations below:

Table 3.1: BMI Classification

BMI	Classification
Below 18.5	Underweight
18.5 – 24.9	Normal
25.0 – 29.9	Overweight
30.0 and Above	Obese



Figure 3. 2 Illustration of Data Retrieval

After the data retrieval is done, the data will be filtered with butterworth filter [8], and after that the data can be used as one of the input for virtual manufacturing process [9].

4. Results and Analysis

A. Weight and Height Measurement of Each Individuals

Table 4.1: Weight and Height Measurement

No	Initial	Age	Gender	Height (cm)	Weight (kg)	BMI	Classification
1	A	22	Male	168	79.5	28.2	Over
2	B	23	Male	175	57	18.6	Normal
3	C	22	Male	175	79.1	25.8	Over
4	D	22	Male	168	57.6	20.4	Normal
5	E	22	Male	176	87	28.1	Over
6	F	22	Male	174	98	32.4	Obesity
7	G	22	Male	174	95	31.4	Obesity
8	H	26	Male	172	72	24.3	Normal
9	I	22	Male	167	61.2	21.9	Normal
10	J	22	Male	161	66.4	25.6	Over

In the first measurement, for acquiring height and weight per each individu, the results showed that out of the ten individuals whose data were collected, there were 3 BMI classifications obtained, including Normal BMI for individuals B, D, H, I, Overweight BMI for individuals A, C, E

B. Sampling of Muscle Contraction Results

Table 4.2: Results of Muscle Contraction on Each Individual

No	Initial	mili Volt(mV) Value Per Load Variable					
		0 kg	1 kg	2 kg	3 kg	4 kg	5 kg
1	A	0,014	0,025	0,104	0,097	0,118	0,126
2	B	0,033	0,058	0,083	0,142	0,220	0,211

3	C	0,018	0,047	0,076	0,089	0,134	0,120
4	D	0,043	0,070	0,095	0,127	0,173	0,216
5	E	0,027	0,036	0,051	0,071	0,122	0,156
6	F	0,045	0,049	0,067	0,114	0,092	0,137
7	G	0,019	0,032	0,039	0,077	0,073	0,068
8	H	0,026	0,040	0,042	0,054	0,095	0,104
9	I	0,028	0,048	0,086	0,134	0,211	0,203
10	J	0,052	0,080	0,088	0,069	0,102	0,150

Table 4.3: R-Square Value for Each Individu

No	Individual	R-Square
1	A	0,784
2	B	0,952
3	C	0,847
4	D	0,987
5	E	0,991
6	F	0,881
7	G	0,825
8	H	0,951
9	I	0,947
10	J	0,744

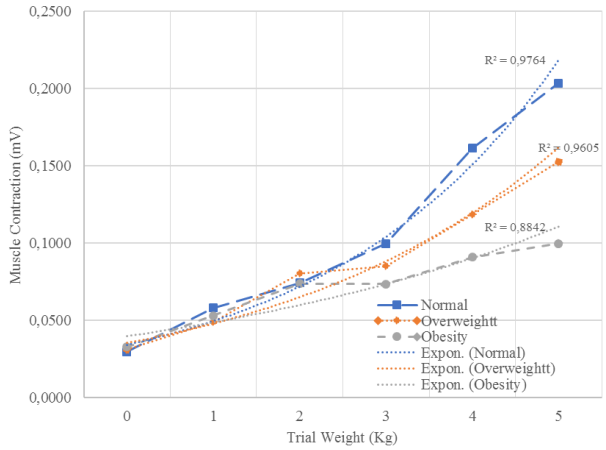

Figure 4.1 Comparison Average Per Classification of BMI

It was found that in the relaxed condition without lifting the load, the value of non–zero muscle contraction, then for each increase of lifting load, it is known that each individual testers produces a chart that tends to be exponential, with the lowest r-square value at 0.784. So that the increasing of weight variabel can represent well-added contraction on biceps muscle brachii. Whereas for the R-Square value for each BMI classification shows good results, where the lowest value of R-Square is in the Obesity group with a value of 0.8842, shows a positive relationship between the addition of contraction to the addition of the trial weight.

Table 4.3: The Difference Between BMI Based Muscle Contraction

Weight Variable (Kg)	BMI Classification				
	Normal (mV)	Over-weight (mV)	% Differ-ence	Obesity (mV)	% Differ-ence
0	0,030	0,031	-0,300	0,033	-0,673
1	0,058	0,049	1.923	0,053	1.078
2	0,074	0,080	-1.299	0,074	0,116
3	0,100	0,085	2.992	0,073	5.457
4	0,161	0,119	8.927	0,091	14.683
5	0,203	0,152	10.601	0,100	21.598

As for the graphic analysis per BMI classification, it was found that there was a tendency of respondents with smaller BMI values requiring greater contraction compared with respondents who had a larger BMI, when compared to the normal BMI category muscle contraction, individuals in the Overweight category and Obesity tends to be the same at the contraction load from range 0 (relaxation) to 3kg load, the difference between the categories is only about 0.3 – 6%, but when the lifting of 4 kg and 5 kilograms, low-BMI individuals require contraction greater up to 21% compared to BMI Overweight category.

5. Conclusion

Myoware sensor is one option to sense the muscle contraction that can be integrated with Virtual Manufacturing platform, following this point:

a. The result of the graph plot between the addition of the contraction load with the magnitude of the potential difference generated by the electromyogram sensor tends to be exponential.

b. The value of R-Square on the test of adding the contraction load per individual on average is 0.891 and the lowest value of 0.744. This shows a good correlation between the lifting load as the independent variable and the individual as the bound parameter. During the data retrieval process, there were no complaints from the respondents on the surface of their skin when the electrodes were attached, making them safe to use.

c. In the process of individual grouping per BMI score, obtained 3 distribution groups with the lowest R2 value of 0.884. Shows a positive correlation between the magnitude of muscle contraction to the value of BMI. In the early stages, BMI can be a parameter to perform calibration, this is because there is similarity of muscle contraction characteristics among respondents who have the same BMI class.

d. From the average amount of contraction, it was found that at the time of relaxation conditions until the lifting of the load of 3 kg, there was no contrast difference between BMI groups, but when the load removal of 4kg and 5kg, the contraction between groups was quite extreme, for lifting the 5kg load, normal BMI individuals require contractions up to 21.598% greater than the individual BMI Obesity.

Acknowledgement

This research is funded by PITTA Research Grant 2018

References

[1] Stratos, A., et al., A Virtual Reality Application to Attract Young Talents to Manufacturing. Procedia CIRP, 2016. 57: p. 134-139.
[2] Al-Ahmari, A.M., et al., Development of a virtual manufacturing assembly simulation system. Advances in Mechanical Engineering, 2016. 8(3): p. 1687814016639824.
[3] Boothroyd, G., Dewhurst, P., Knight, Product Design for Manufacture and Assembly, Second Edition, Revised and Expanded. 2002, Boca Raton: CRC Press.
[4] Bell, L.L. CAD and Virtual Prototyping Software: Continuous Development in a Challenging Economy. 2010 [cited 2018 27/06/2018].
[5] Konrad, P., The abc of emg. A practical introduction to kinesiological electromyography, 2005. 1: p. 30-35.
[6] Basmijan, J., Muscle fatigue and time-dependant parameters of the surface EMG signal. Muscles Alive: Their function revealed by electromyography, 1985.
[7] Hasan, N. A. K. A. K., Kamal, H. M., & Hussein, Z. A. (2016). Relation between body mass index percentile and muscle strength and endurance. Egyptian Journal of Medical Human Genetics, 17(4), 367-372.
[8] G. Kiswanto and M. F. Juzar, Muscle Contraction Sensor Filtering and Calibration for Virtual Manufacturing Development, Depok, West Java: Universitas Indonesia, 2018.
[9] G. Kiswanto and F. Zhultriza, Development of Appliccation using Integration of Hand Tracking based on Image Processing and EMG Sensor for Virtual Manufacturing, Depok, West Java: Universitas Indonesia, 2018.