*International Journal of Engineering &Technology*, 7 (4.24) (2018) 38-41

**International Journal of Engineering & Technology**

*Website: www.sciencepubco.com/index.php/IJET*

***Research paper***

# Design and Implementation of Modular Multilevel Converter for Photovoltaic Energy Generation Using Hill Search Method

**Rachananjali K1*, Dr Srinu Naik R2**

*1Asst Prof, Dept of EEE, Vignan's Foundation for Science, Technology and Research, Vadlamudi*
*2Asst Prof, Dept of EE,AU College of Engineering (A),Visakhapatnam*
**Corresponding author E-mail:rachananjali@gmail.com*

## Abstract

This article proposes an approach to capture solar energy utilizing double energy conversion from DC-DC and DC-AC. The present scenario requires lot of energy in order to meet the demand; the energy generation without hurting the environment is possible by means of non-conventional sources. In this article the source chosen is solar energy. To capture solar energy, solar cell is utilized. On capturing the solar energy the achieved result is in the form of DC. The DC link is established and it is boosted with the help of DC-DC converter and it is being fed as input to modular multilevel converter (MMC) which provides us with the desirable AC output. To escalate the performance of the system hill search which is one of the maximum power point tracking (MPPT) technique is being implemented. The performance of the proposed system is being verified by simulation results and results are validated.

***Keywords***: *Modular Multilevel Converter (MMC); Photo-voltaic(PV); Maximum Power Point Tracking(MPPT); Pulse Width Modulation(PWM); Perturb & Observe (P&O)*

## 1. Introduction

The demand for energy and the distribution systems are substantially increasing at a faster pace. In order to meet this increase in demand renewable energy systems along with conventional systems are being employed. Renewable energy systems are of varied type and they are solar, wind, geothermal etc. In comparison to difference renewable energy systems solar energy is widely preferred because of its abundance and availability. Photovoltaic energy generation is achieved through PV cells. The solar cells convert the solar energy to electrical energy. The drawback associated with the PV cell is its conversion efficiency is very less which is not desirable. To escalate its performance power converters along with maximum power point tracking (MPPT) techniques have been introduced [3,6-7]. As the name itself indicates Maximum Power Point (MPP), it is a technique whose function is to extract maximum power under all conditions. In order to achieve the power in required form converters are incorporated in the system. Conventional techniques include inverters with DC-DC Converters which increments cost, complexity and space. In literature review several techniques to overcome the snags are available such as conventional two level and multilevel inverter. When referred to Conventional two level inverter it actually addresses to a voltage source inverter. The disadvantage of two level inverters is that it suffers from higher order harmonics, high switching losses which makes it not preferably for usage. Multilevel inverters came into picture so as to reduce the losses and harmonics associated with two level inverters. Among the available multilevel inverter the dominant configurations are cascaded and neutral point clamped [2]. They are best for medium and high power applications. But the weak point is they require transformer to have electrical isolation between active source and H bridge converter cells. Due to isolation transformer converter size, cost and complexity increases thereby introducing losses. Another factor to disregard cascaded multilevel converter it creates circulation current and may cause asymmetrical phase voltage during unbalanced network.

To overcome the snags available with multilevel converter an advanced version known as Modular Multilevel Converters (MMC) has been proposed [1,4]. Harmonic content can be decreased by an increase in the number of output voltage levels. To achieve this converter proposes to use large no of sub modules which features highest degree of redundancy and modularity[5]. The controller required for controlling sub module complexity increases but still it is preferred to simple structure thereby reducing manufacturing costs. The previous papers discussing converters did not thought of reducing the complexity [4].

This paper proposes a two stage conversion in which the energy extracted from solar energy is obtained in the form of DC voltage. The DC voltage is boosted with the help of DC-DC converter along with the MPPT technique. Next conversion comprises of DC-AC conversion with the aid of proposed MMC. Fig 1 explains the proposed system. Section 2 discusses about the photovoltaic system along with the MPPT technique. Section 3 discusses about the MMC. Section 4 highlights the MATLAB analysis for the proposed technique and its effectiveness is evaluated. Section 5 highlights the conclusion and any further development available in the area.

**Copyright © 2018 Authors. This is an open access article distributed under the Creative Commons Attribution License, which permits unrestricted use, distribution, and reproduction in any medium, provided the original work is properly cited.**

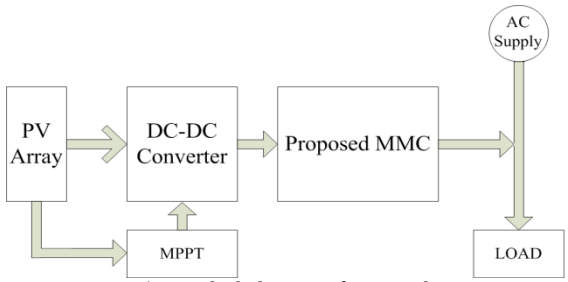


**Fig. 1:** Block diagram of proposed system

## 2. Photo-voltaic and MPPT

### 2.1 Photo-voltaic

To overcome the shortage of energy, energy generation from non-conventional sources is taking focused. Of the available non-conventional sources solar energy is taking lead because of its abundance. The interface used to conversion is photo-voltaic cell which realizes the principle of photovoltaic effect. Photo-voltaic effect is the phenomenon due to which light energy is converted to electric energy. Fig 2 shows the photo-voltaic effect.

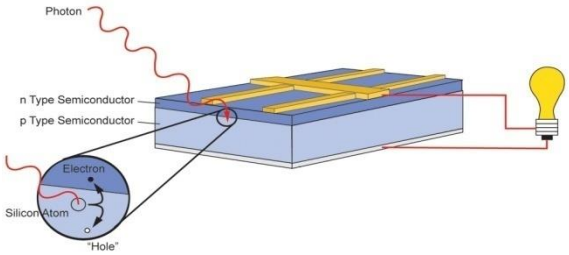


**Fig. 2:** Principle of photo-voltaic effect

For analytical purpose PV cell in literature review is represented by single diode model as shown in Fig 3. The model has a current source to indicate the current generated by photons. The value of the current source depends on parameters such as irradiance (G) and temperature (T). Along with the current source an anti parallel diode and resistors are incorporated. Inclusion of diode indicates the direction of current flow in one direction and resistors are included to represent the losses. The two resistors are shunt resistance Rsh and series resistance Rs, shunt resistance is to indicate the current leakage whereas series resistance indicates the ohmic losses.

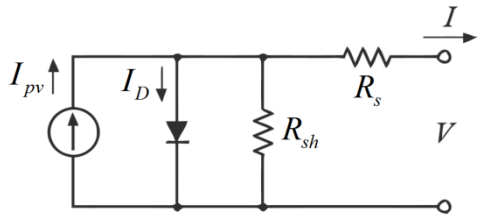


**Fig. 3:** PV Cell electrical representation in literature

The current through PV cell is given by:-

$$I = I_{pv} - I_D\left(e^{\frac{V+IR_s}{\eta V_T}} - 1\right) - \frac{V+IR_s}{R_{sh}} \quad (1)$$

$I_{pv}$ indicates the current generated due to light and $I_D$ is the saturation current. $I_{pv}$ is calculated by using current density, temperature and irradiance.

$$I_{pv} = \left[I_{sc} + k_i(T - T_n\right]\frac{G}{G_n} \quad (2)$$

Subscript *n* refers to the nominal value

T cell temperature in Celsius;

$k_i$ short circuit current/ temperature coefficient;

PV module current and voltage does not follow a specific relation and its characteristics are non linear. Current depends on solar irradiation and voltage depends on temperature.

### 2.2 MPPT Techniques

MPPT techniques came into existence in order to extract maximum power under all conditions. We know that power is the product of voltage and current. Similarly power at MPP is the product of $V_{mpp}$ and $I_{mpp}$ where $V_{mpp}$ is MPP voltage and $I_{mpp}$ is MPP current. In literature several techniques are available to trail maximum power point and the techniques are (i) Perturb and Observe method (ii) Incremental conductance (iii) Current sweep and (iv) Constant voltage.

#### 2.2.1. Perturb and Observe method

In P&O method the power is measured after the adjustment in voltage is done. On adjusting the voltage, if there is an improvement in power the voltage is again adjusted and if not the corresponding power is the maximum power. On plotting the characteristics it represents a hill hence also known as hill climbing method or hill search. This is easy to implement hence it is most preferred technique.

#### 2.2.2. Incremental conductance

We know that P=VI, from the expression it can be deduced that dP/dV=0 at MPP. This observation is utilized in incremental conductance. It measures positive change in I and V. Depending on the sign change of dP/dV correspondingly I and V are changed.

#### 2.2.3. Current Sweep

In this method a sweep waveform is taken as reference for PV array current. Utilizing this waveform characteristics are obtained and updated. From the characteristics $V_{mpp}$ is computed.

#### 2.2.4. Constant voltage

Unlike current sweep in constant voltage power is interrupted momentarily and $V_{oc}$ is measured. The operation is resumed with voltage at a fixed ratio. It is operated by matching to $V_{ref}=kV_{oc}$. Vref is determined as a ratio to $V_{oc}$.

For its ease of implementation P&O method is highly preferred. In this article P&O method is used.

## 3. Modular Multilevel Converter

As the output obtained from the PV panel is of low value to increase the value to be of considerable value converter or converters are employed. For many applications the output obtained from PV panel is fed to DC-DC converter but for practical applications required is AC hence to convert the DC to AC there is a necessity of another converter which can convert DC to AC. As discussed in the introduction conventional two level inverters are not preferred hence in literature another converter named as Modular Multilevel Converter has been proposed. Due to its advantages MMC is mainly preferred for medium and high power applications. MMC consists of sub modules. Sub module can be a half bridge or a full

bridge inverter. Fig 4 shows the half bridge inverter whereas Fig 5 shows the full bridge inverter.

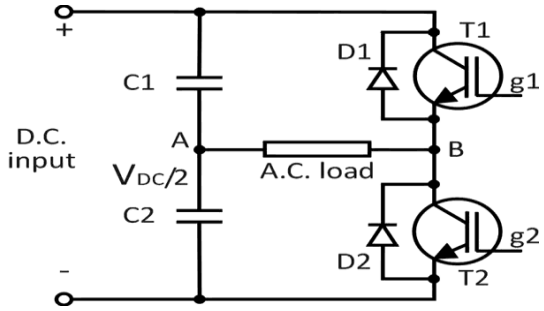


**Fig. 4:** Half bridge inverter

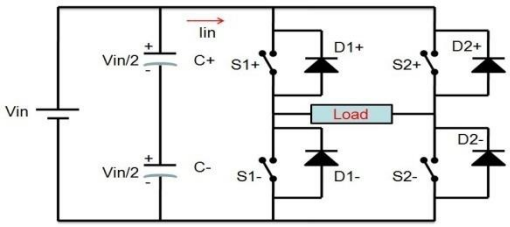


**Fig. 5:** Full bridge inverter

In this paper a basic three-level MMC is employed for the application. Fig 6 depicts the single leg of modular multilevel converter. For a specified level number the number of sub modules can be determines as

$N_v = 1+n/2$

Where $N_v$ is the number of voltage levels

n is the total number of sub-modules

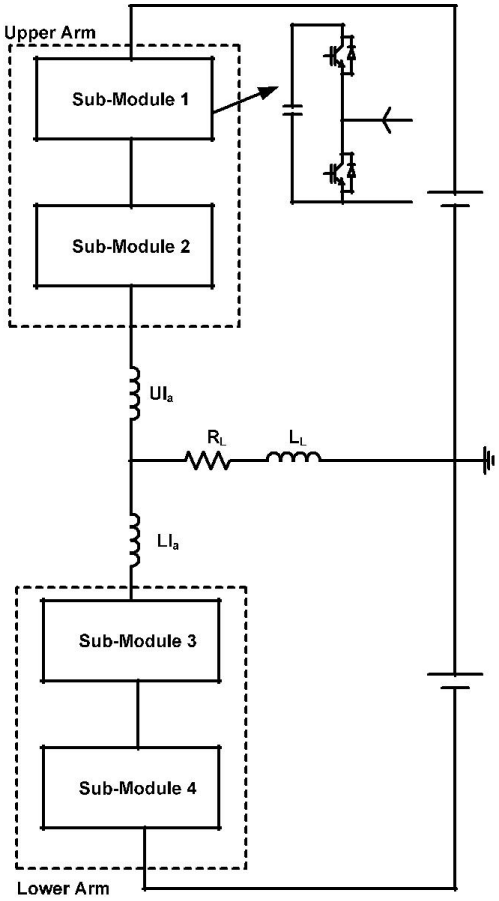


**Fig. 6:** Single leg of modular multilevel converter

Using the above relation to obtain a three level output we need to employ four sub modules in each leg, two in upper arm and two in lower arm. Inductances are inserted to suppress the differential currents between upper and lower arms.

## 4. Simulation results

The two stage conversion proposed is first simulated in MATLAB and Fig 7 represents the MATLAB model of the proposed system.

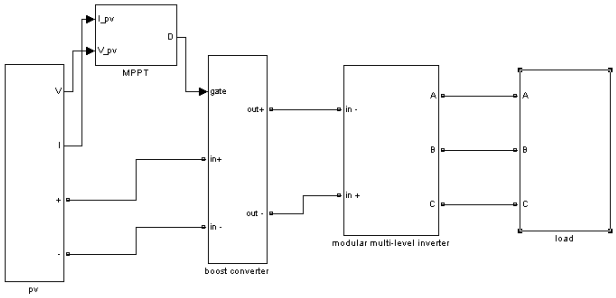


**Fig. 7:** MATLAB model of the proposed two stage conversion system

The output obtained from the PV panel is 140 V which is boosted to 280 V. Fig 8 represents the output of PV panel i.e. input voltage of boost converter whereas Fig 9 represents the output of boost converter. To get the specified voltage two boost converters are connected in series as in practical to sustain 460 V it is difficult to procure the required switch. In achieving 140 V PV panel along with MPPT tracker is employed. In implementing MPPT technique hill search method is used. The gate signals to the MMC are fed with the help of pulse generator. The output obtained from the MMC is fed to the grid or load depending upon the requirement. Fig 10 shows the line voltages obtained from MMC. The line voltage is approximately 400 V.

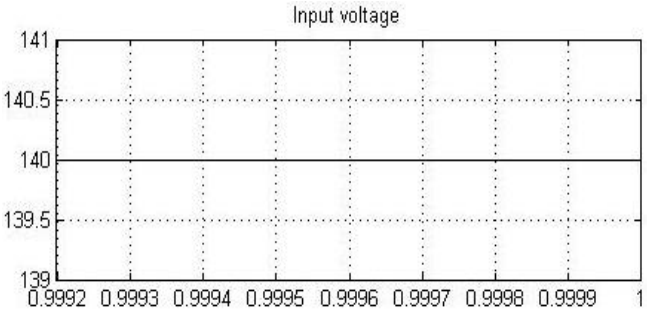


**Fig. 8:** Input voltage fed to boost converter

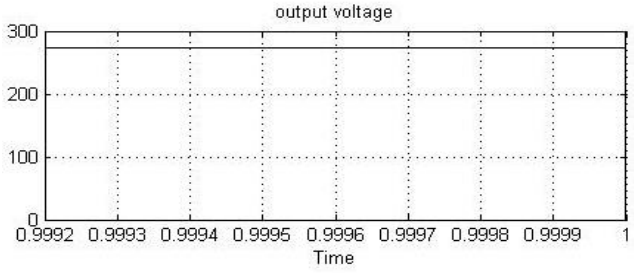


**Fig. 9:** Output voltage from boost converter

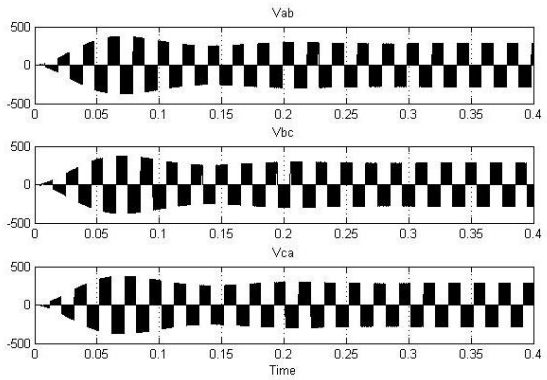


**Fig. 10:** Output voltage from MMC

## 5. Conclusion

In this paper two stage conversion for the power obtained from PV panel is done. For two stage conversion the first stage comprises of DC-DC conversion so as to increase the voltage obtained from PV array whereas the second stage of conversion deals with the required form of voltage which is the alternating voltage type. In order to convert DC-AC a new converter has been proposed which is Modular Multilevel Converter; the converter proposed has various advantages when compared to conventional inverters due to the reduction in harmonics, elimination of transformer thereby reducing the losses. Further development can be done to the proposed system by creating a hybrid environment to capture other.

## Acknowledgement

This publication is an outcome of the R&D work undertaken project under the Visvesvaraya PhD Scheme of Ministry of Electronics & Information Technology, Government of India, being implemented by Digital India Corporation.

## References

[1] E. N. Abildgaard, M. Molinas, "Modelling and Control of the Modular Multilevel Converter (MMC)", *Energy Procedia*, pp. 227-236, 2012.

[2] J. Rodriguez, J. S. Lai, and F. Z. Peng, "Multilevel Inverters: a survey of topologies, controls, and applications. " *IEEE Trans. Ind. Electronics*, vol. 49, no. 4, pp. 724-738, August 2002.

[3] M.Awais Abbasi, M. Fahad Zia, "Novel TPPO based maximum power point method for photovoltaic system", Advances in Electrical and Computer Engineering,Vol 17, No 3, pp. 95-100, 2017.

[4] Rachananjali K, Dr Srinu Naik R, Suguna K, "Implementation of Modular Multilevel Converter", Vol. 9, Issue 5, pp 251-258, Oct 2017.

[5] Xiaojie Shi, Bo Liu, Zhiqiang Wang, Yalong Li, Leon M. Tolbert, Fei Wang," Modeling, Control Design, and Analysis of a Startup Scheme for Modular Multilevel Converters", IEEE Trans. Ind. Electronics, vol. 62, no. 11, pp. 7009-7024, Nov 2015.

[6] Fernando Martinez-Rodrigo, Dionisio Ramirez, Alexis B. Rey-Boue, Santiago de Pablo, Luis Carlos Herrero-de Lucas, " Modular Multilevel Converters: Control and Applications" Energies 2017, 10, 1709.

[7] A. Lesnicar and R. Marquardt, "A new modular voltage source inverter topology," in Proc. EPE, vol. 3, pp. 2–4, 2003.

[8] S. Kauro, J. I. Leon, D. Vinnikov, L. D. Franquelo, "Grid connected photovoltaic system- An overview of recent research and emerging PV converter topologies," IEEE Ind. Electron. Magazine, vol. No. pp. 47-61, 2015.