International Journal of Engineering &Technology, 7 (4.24) (2018) 1-3

International Journal of Engineering & Technology

Website: www.sciencepubco.com/index.php/IJET

Research paper

High Frequency Link Power Conversion System for Fuel cell Applications

A. R. Vijay Babu[1]*, P.M.Venkatesh[2], Dr.K.Suresh[3]

Vignan's Foundation for Science, Technology and Research, Guntur, Andhra Pradesh, India- 522213.
**Corresponding author E-mail: 202vijay@gmail.com*

Abstract

In this paper an empirical model of the air breathing (ABFC) is proposed to investigate the cell voltage verses current density characteristics and harnessing of maximum energy from natural resource whenever it's available. The power electronic converters role is important in between source and load. Proper controller can switch the converter in the desired time and improve the system performance and stability. The mathematical model of the ABFC is built in MATLAB/Simulink. The proposed system also has boost converter, bidirectional DC-DC converter and inverter for grid and energy integration. The boost inverter/buck rectifier in this system is controlled by ANFIS controller is for better output, boost and bidirectional DC-DC converters are controlled by PID controller in closed loop. Overall operations are based on modes main controller, which control the system operation in different modes. Any variations happening in the input, storage and load parameters, the controller changes the mode and operates the system in effective way.

Keywords: *Bidirectional DC-DC converter, Boost inverter, Fuel cell; mathematical model; polarization curves.*

1. Introduction

A Fuel cell is a single step energy conversion device which converts the chemical energy directly into electricity obviating the step of chemical combustion used in a typical process of heat extraction from the fuel. Modern controllers are very helpful for energy conversion system, now days most of the energy storage systems are fully depends on intelligent controllers such as digital logic and fuzzy logic. The fuzzy logic consist of fuzzy controller and fuzzy sliding mode controller, these controller are robust [1-2]. It is a direct single step energy conversion device and is therefore associated with high electrical efficiency. Water and heat are the by-products of the along with electricity when pure hydrogen is used as a fuel and therefore it is clean source of energy. The characteristic features of are high efficiency, zero/low pollutant emission and fuel flexibility. Even though these are in robust, it has some drawbacks related to control parameter selection constraints and complex theory. So, this controller performance is not efficient and effective in the inverter topology [3].

In conventional energy storage systems the converters like uncontrolled AC-DC rectifier, PID controlled boost converter, PID controlled bidirectional DC-DC converters are also using for power conversion stages with grid tied inverter [4]. But converters in these systems are operating in closed loop but the overall system is operated by open loop configuration. There are some serious dis-advantages related to this open loop configuration such as non-reliable, inefficient operation and less utilization of natural energy. To overcome these draw back the system should be operate in closed loop from some parameter considerations. These three features make the an extremely desirable option for future power generation and transportation applications [5]. These drawbacks are overcome by an Adaptive Neuro-Fuzzy Inference System (ANFIS), it has advantages of fuzzy logic and neural networks which fulfill the alteration rule based demand and it can determine the inference logic rules. ANFIS can control the grid tied bidirectional converter in three modes such as grid tied boost inverter mode, grid tied buck rectifier mode and stand-alone mode in an effective way.

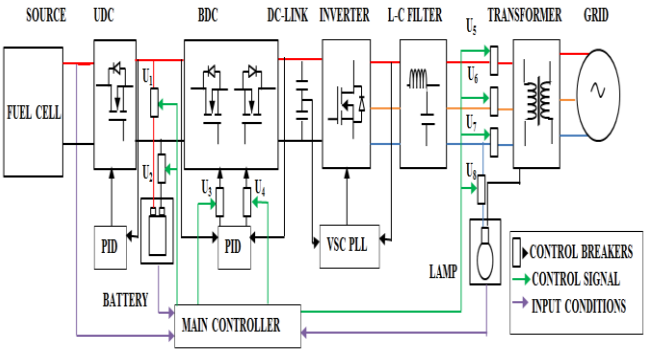

Fig.1: Block diagram of the proposed system

This proposed system considers the parameters such as speed (v), state of charge (%) and load position (ON/OFF). Based on these parameters the Speedgoat generates control signal and given to control breakers which operates the system in different modes for an effective operation with linear and non-linear load is as shown in Fig. 1.

2.Mathematical Model of ABFC

A Proton Exchange Membrane (PEM) fuel cell consists of three layers, viz, anode, cathode and electrolyte [6]. The working of the ABFC is shown in Fig. 2.

Copyright © 2018Authors. This is an open access article distributed under the Creative Commons Attribution License, which permits unrestricted use, distribution, and reproduction in any medium, provided the original work is properly cited.

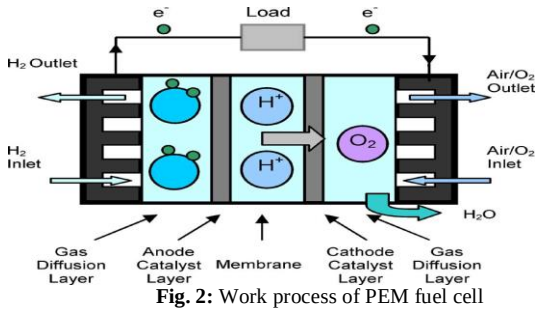

Fig. 2: Work process of PEM fuel cell

The cell voltage of a fuel cell is shown in Eq. (1)

$$V_{Cell} = V_{OC} - \Delta V_{Act} - \Delta V_{Ohm} - \Delta V_{Con} \quad (1)$$

The activation loss, Ohmic loss and concentration loss can be modeled as in Eq. (2) – (4).

$$\Delta V_{Act} = \frac{RT}{\alpha F} \ln\left(\frac{i + i_{Crossover}}{i_O}\right) \quad (2)$$

$$\Delta V_{Ohm} = \left(i + i_{Crossover}\right).r_{Ohmic} \quad (3)$$

$$\Delta V_{Conc} = k.\frac{RT}{nF} \ln\left(1 + \frac{1}{\alpha}\right) \ln\left(\frac{i_L}{i_L - i}\right) \quad (4)$$

The MATLAB model of the ABFC and its polarization characteristics are shown in Fig.3 and Fig.4 respectively.

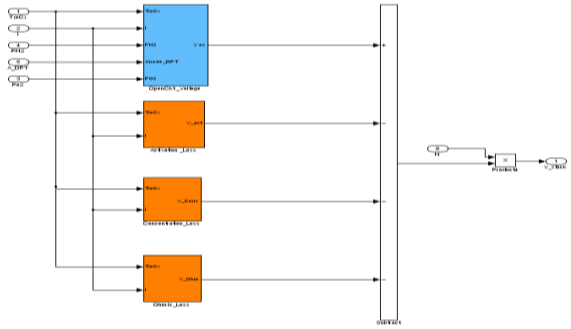

Fig. 3: MATLAB model of single fuel cell

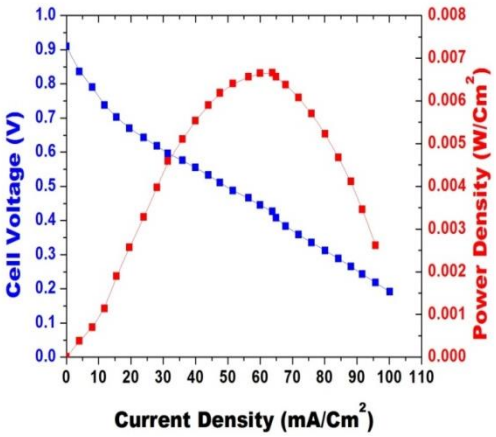

Fig. 4: i-V characteristic of a single fuel cell

3. Results and Discussions

During the load is in ON (manual) position the control breakers (U_1&U_2), U_5&U_6 are turn ON by speed goat and wind power is supply to charging the battery and supply to load or else load is in OFF (manual) the control breakers (U_7 U_8 U_9) turn ON and supply the wind power to grid and remaining control breakers remain in OFF condition. The other two conditions are wind speed (v) is >= 5m/s and state of charge is in between (40-80) %. The input of the wind energy conversion system is 8 m/s. with this wind speed the output of wind profiles values of rotor torque is -0.5 N-m and rotor speed is 160 rad/sec. The output of PMSG is 24V. This 24V AC supply is provided to converters circuit, and the final 24V DC supply is given to charge the battery and also load. The carrier and reference signal is compared and the output signal of PWM controlled by the converter switches. The carrier and reference signal are compared, and PWM signal is generated given to the converter switches. The battery output 24V DC is now obtained and provided to the bidirectional converter, it operates in boost mode and the getting input voltage from the battery is step-up to 48 V, and current value is 1A. The output waveforms are shown in Fig.5.

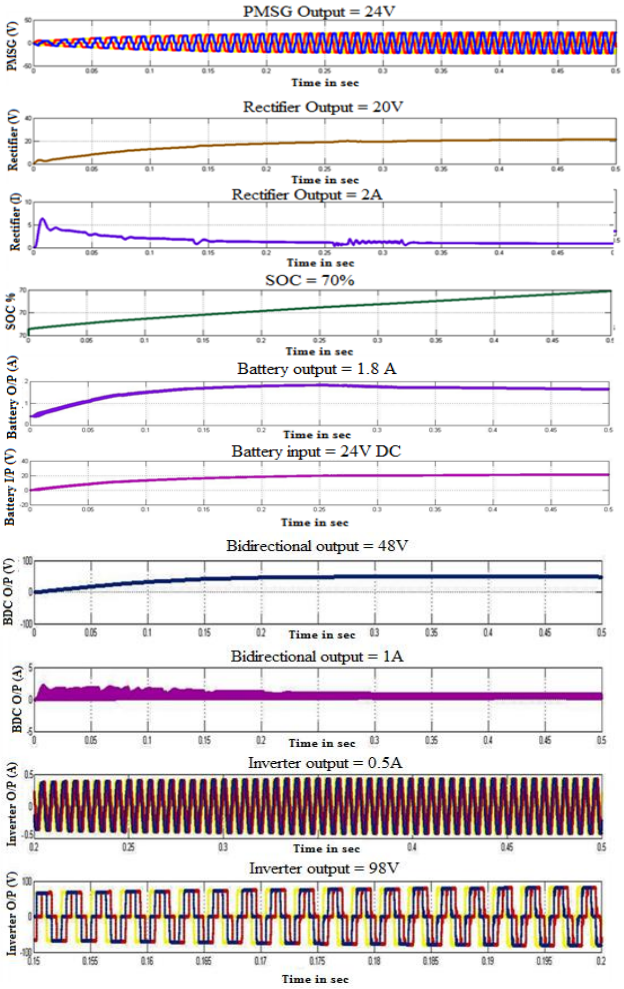

Fig.5: MATLAB output waveforms

4. Conclusion

In this paper, bidirectional converter operation plays an important role for mode changing operation and its five modes of operation were analysed. Based on this source level the operations are divided into five modes and also these modes based on state of charge in battery. The main objective of this paper is to build the mathematical model of an ABFC to explore the polarization characteristics, which are useful to analyse the real time system behaviour at various operating states. A variety of operating conditions from different inputs were analysed. The system has a robust performance under mode changing while input wind speed changes. The mode changing operation is effectively done in both simulation and real-time platforms.

References:

[1] J. Jia, Q. Li, Y. Wang, Y.T. Cham, M. Han, "Modeling and Dynamic Characteristic Simulation of Proton Exchange Membrane " IEEE Trans. Control Syst. Technol., vol. 24, no. 16, (2009), pp. 283–29.

[2] Suresh. K, Arulmozhiyal, R, 'Design and implementation of bi-directional dc-dc converter for wind energy system', Circuits and Systems, vol. 7, (2016), pp. 3705-3722.

[3] Noguer N, Candusso D, Kouta R, Harel F, Charon W, Coquery, A PEMFC multi physical model to evaluate the consequences of parameter uncertainty on the performance. Int J Hydrogen Energy, vol. 40, (2015), pp. 3968–3980.

[4] A.R.Vijay Babu, Gorantla Srinivasa Rao, Panthalingal Manoj Kumar, "Modelling, Simulation and Analysis of Performance Characteristics of an Air Breathing", Journal of Advanced Research in Dynamical and Control Systems, Vol. 9, no. 1, (2017), pp. 293-304.

[5] L. James and D. Andrew, Fuel Cell Systems Explained. Chichester, U.K.: Wiley, (2003).

[6] Babir F, PEM Fuel cells - theory and practices, Oxford, U.K.: Elseveir Academic press, (2006).