International Journal of Engineering & Technology, 7 (3.33) (2018) 194-197

International Journal of Engineering & Technology

Website: www.sciencepubco.com/index.php/IJET

Research paper

Posture correction system of squat using EMG and 6-axis acceleration sensor

Hwangsung Min[1], Songchang Won[1], Hojun Yeom[1]*

[1] *Eulji University, Seongnam, Korea*
** Corresponding author E-mail:hyeom@eulji.ac.kr*

Abstract

Recently, the need for fitness for health and appearance has increased and interest in fitness has been increasing. Because of the cost of personal training (PT), many people are doing exercise at home. However, when the correct feedback is not received, the exercise is performed in a wrong posture, resulting in frequent cases of injuries or sprains.
In this study, we developed an exercise posture correcting device to exercise alone at home. Especially, we have studied squat which many people are doing individually. The EMG module is placed on both thighs to receive the signal, and the EMG of the main muscle is compared with the EMG of the correct posture. At the same time, the MPU-6050, which is a 6-axis acceleration sensor, measures the angle of the knee and the degree of sitting. We will develop a system that enables feedback.

Keywords: *App Inventor; EMG, Kalman filter;MPU-6050, Squat, 6-axis acceleration sensor*

1. Introduction

Individuals are increasingly concerned about the welfare of the world, and self-development is becoming an important part of life. Individuals are increasingly concerned about the welfare of the world, and self-development is becoming an important part of life. There is a growing interest in personal health and appearance management, and more and more people are managing themselves. Of these, exercise is often the method of choice for achieving a healthy body and a healthy appearance. Some people go to health clubs for a fee, but there is an increasing trend in Home Training Families(HomT Family) that use simple devices to exercise at home. Although many information related to exercise can be easily obtained through internet or broadcasting media, side effects such as injuries, sprains and asymmetric muscle growth are increasing because unilateral knowledge and correct feedback cannot be obtained.
In this paper, we have applied squat, one of the three major exercises of fitness. The real-time smartphone app can be used as an instantaneous feedback for the EMG of the femoral rectus muscle, the lateral fascia and the lateral fascia in the quadriceps muscle. We monitor the posture of the balance through the electromyogram for the effective feedback and measure the angle of the knee and the angle of the seat and feedback it in real time to realize the device which can calibrate the self-exercise posture[1][2][3].

2. Methods

2.1. EMG

EMG is a visual observation of how well the muscles are activated by measuring and recording the electrical signals generated by the skeletal muscles and evaluating the EMG after measuring the muscle's maximal voluntary contraction (MVC).

2.2 .Signal Processing

Signals input from the right leg and left leg to the MCU through the ADC are unsigned values with offset. Therefore, for signal processing, subtract the offset value and change it to a signed floating point value. The frequency information of the EMG signal includes various information about the muscle state such as the muscle power, but in this study, only the magnitude of the EMG signal according to the arm motion is extracted.
The amplitude information of the EMG signal includes motion-related information in the low-frequency component of the EMG signal in general, and processes the signal using a low-pass filter using the one-pole iir filter as follows.

$$y[n] = y[n-1] + b(x[n] - y[n-1]).$$

2.3 .Kalman filter

The Kalman filter is a recursive filter that tracks the state of a linear dynamic system containing noise, developed by Rudolf Kalman. Kalman filters are used in many areas such as computer vision, robotics, radar, etc. In many cases, this algorithm is very efficient and is based on measurements made over time. More precise results can be expected than using only measurements at that moment. As a filter that recursively processes input data including noise, optimal statistical prediction for the current state can be performed. The entire algorithm can be divided into two types, prediction and update. Prediction refers to the prediction of the current state, and the update means that a more accurate prediction can be made through the values including from the present state to the observed measurement [4].

Copyright © 2018 Authors. This is an open access article distributed under the Creative Commons Attribution License, which permits unrestricted use, distribution, and reproduction in any medium, provided the original work is properly cited.

2.4. MPU-6050

The MPU-6050 sensor is called a six-axis gyro acceleration sensor. Here, 6 axis means 6 degrees of freedom (DOF), and acceleration axis 3 axis + gyro 2 axis + temperature axis 1 axis is abbreviated as 6 axis tilt sensor. The MPU-9050 is a 9-axis sensor that adds three axes of geomagnetism (geomagnetic field) sensors to the MPU-6050 series. The MPU-9050 sensor is a sensor that can acquire both 3-dimensional position and 3-axis rotation. That is, if you use 9-axis sensor, you can find all three-dimensional position and direction. The most common MPU-6050, which can be controlled with Arduino, helps to understand the core principles of these drones. In addition, the MPU-6050 is the key sensor in the case of the Arduino Drones, which use the MPU-6050 to measure tilt / posture.

2.5 .Bluetooth

There are many ways to use wireless transmission systems, but the most popular methods are Bluetooth, WIFI, ZigBee, and NFC. The method used in this paper is a wireless transmission system widely used in mobile phones, notebooks, earphones, etc. by using Bluetooth transmission system (BLE). Usage distance is used within 10 ~ 20m distance. In Bluetooth, the transmitted data is divided into packets, and each packet is transmitted to one of the designated 79 Bluetooth channels. The Bluetooth used in this paper is 2.0, the maximum transmission rate is 3Mbps, and the actual maximum transmission rate is about 2.1Mbps.

2.6. Application Inventor

AppInventor is an open source web application originally provided by Google and is now managed by MIT. People who are new to computer programming can create application software for Android. The scratch and star logs are very similar to the TNG user interface. Using a graphical interface, users can drag and drop visual objects to create applications to run on an Android device.

2.7. System

Basic EMG hardware and software parts are described in detail for the purpose of this study. The overall system configuration consists of data processing, data transmission and reception, and applications. The data processing section performs signal processing and algorithm execution using the Arduino, transmits and receives data to Bluetooth, and performs real-time monitoring and feedback of the system through an application. The overall system structure presented in this paper is shown in Figure 1.
We constructed electromyogram circuit with frequency band of 20 ~ 400 Hz and amplification factor 2000 times. The EMG is measured and ADC conversion is performed in the module, and the EMG value is used to distinguish whether it is normal or abnormal by using the reference value. The system is designed to transmit the data via Bluetooth. We used Bluetooth shield for Bluetooth communication. In addition, to measure the posture, the angle was measured using the MPU-6050 device. The measured values were used to distinguish between normal and abnormal, and the system was designed to transmit data via Bluetooth.

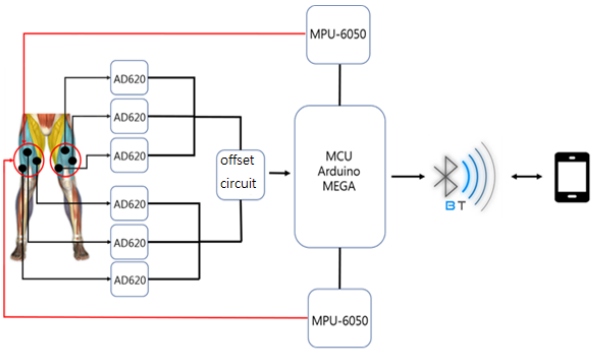

Fig. 1: The overall system block diagram

The signals from the rectus femoris muscles, quadriceps femoris, and extensor femoris muscles of the quadriceps are measured and amplified by the AD620, and then sent to the MCU (Arduino) for signal processing. The EMG signals that have undergone the signal processing are judged to be normal or abnormal according to preset reference values and algorithms, and an algorithm is executed to notify that abnormal 'abnormal' occurs.
The measured right and left leg electromyograms are processed by the MCU (Arduino) and the algorithm is executed. The algorithm pattern in the system is shown in Fig. At the time of signal processing, EMG signals were analyzed to analyze the electromyograms, and the three main muscles of one leg were simplified to represent A: vastus lateralis, B: rectus femoris, and C: vasus medialis. Then, the electromyogram results for the muscles A, B, and C are compared with the reference values, and the algorithm is divided into acceptance, acceptance, and failure. This enables the real-time monitoring of the progress of the algorithm in the mobile phone application using Bluetooth.

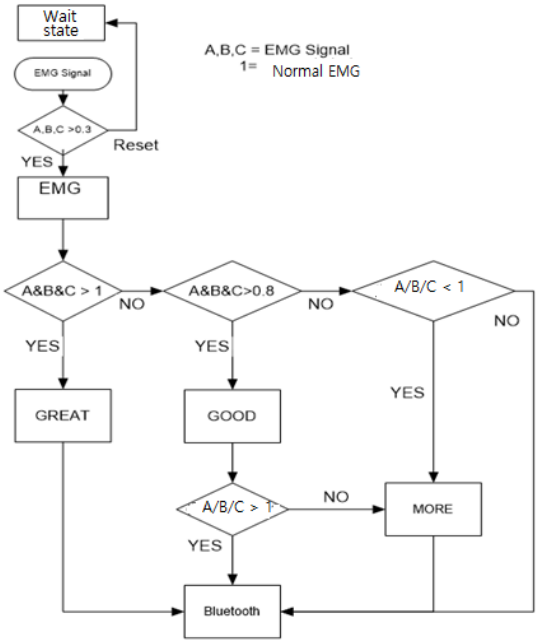

Fig. 2: Decision algorithm based on EMG signal (A: vastus lateralis, B: rectus femoris, C: vasus medialis)

It transmits the signal processing signal from MCU (Arduino) to the app in real time using Bluetooth. At this time, the Bluetooth module uses HC-06. Applications developed through the App Inventor can monitor the algorithms currently running on the MCU (Arduino) from the smartphone app in real time.

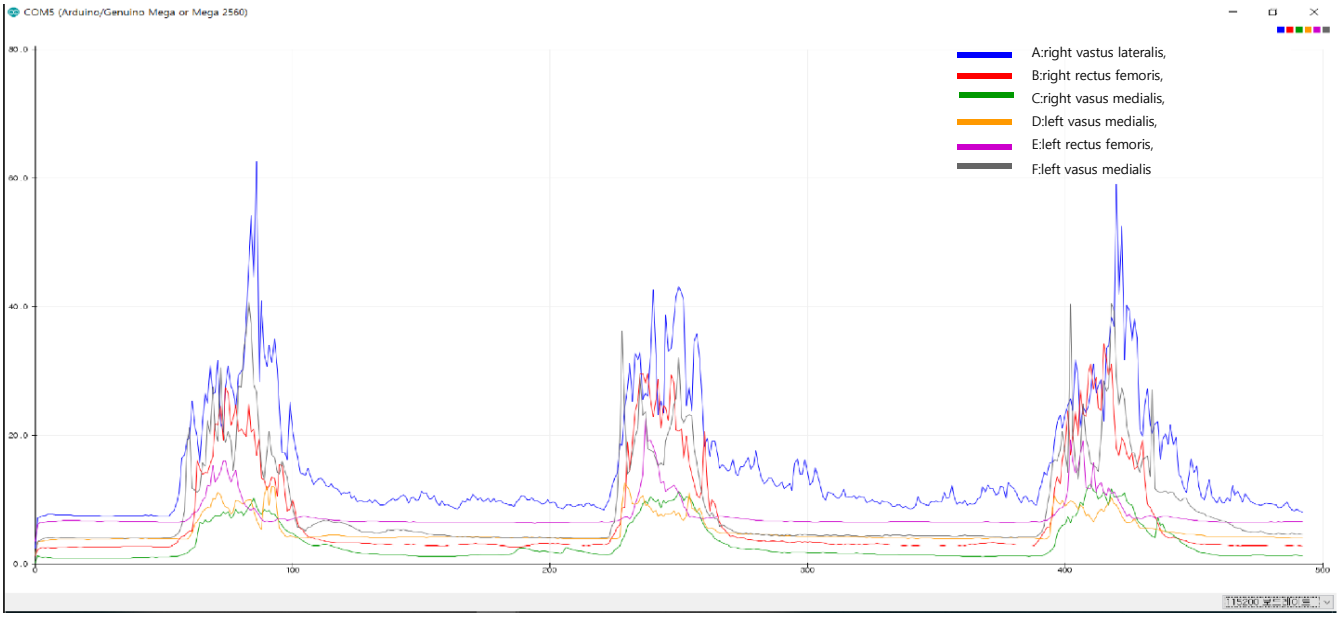

Fig. 3: 6 channel EMG data

The normal and abnormal values of the electromyogram are displayed, and the abnormal EMG is readable in a legible manner.

3. Results

3.1. Measured data

At the time of squatting, electromyograms from both thigh muscles were simultaneously measured. Figure 3 shows EMG signals coming from both thighs simultaneously when in the right squat position. EMG values and MPU-6050 values from both thighs in the right squat position was measured.

During the squat, the signals appearing in the symmetric muscles of both thighs were measured and compared. At this time, the integrated waveform was transmitted to the Bluetooth system so that the app could easily convert and display the data. The EMG waveform is filtered at the top, and the EMG waveform is at the bottom. The EMG waveform is shown when the left part is in the right posture and the right part is in the EMG waveform in order to consider the problem of balance.

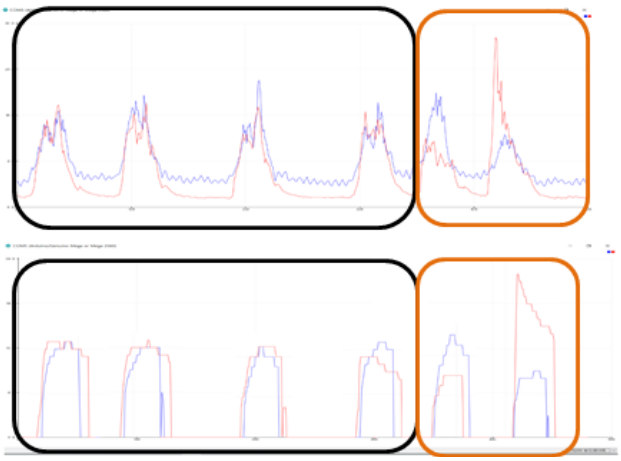

Fig. 4: Comparison with left and right EMG filtered signal

The angle of the knee was measured using two MPU-6050s in order to take the angle of the knee and the degree of sitting in order to achieve the correct attitude during the squat exercise

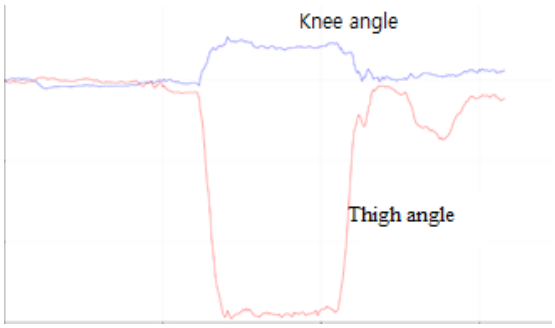

Fig. 5: Comparison with knee and thigh angle

The average value of the normal posture was obtained through the table. The algorithm to judge the normal posture of ± 10% of the EMG from the mean value was applied, and the algorithm to judge ± 20% to the good posture was applied. EMG and MPU-6050 values are transmitted to MIT APP through Bluetooth. Table 1 shows the state of the left thigh and right thigh, and Table 2 shows the balance. Table 3 shows the degree of bending of the knee.

Table 1: EMG – 6 sets measurements and averaged values (A:right vastus lateralis, B:right rectus femoris, C:right vasus medialis, D:left vasus medialis, E:left rectus femoris, F:left vasus medialis)

Muscles	6 sets measurements (relative EMG amplitude)						Averaged values
	1 set	2 set	3 set	4 set	5 set	6 set	
A	19	20	21	20	19	23	20.33
B	12	13	12	13	12	13	12.50
C	18	17	17	18	15	17	17.00
D	15	16	15	16	15	16	15.50
E	12	13	13	12	11	12	12.17
F	20	24	22	20	19	20	20.83

Table 2: Comparison of left and right muscle activity
(A:right vastus lateralis, B:right rectus femoris, C:right vasus medialis, D:left vasus medialis, E:left rectus femoris, F:left vasus medialis)

Muslces	6 sets measurements (Comparison of left and right muscle activity)						Averaged values
	1set	2set	3 set	4 set	5 set	6 set	
|A-F|	1	4	1	0	0	3	1.50
|B-E|	0	0	1	1	1	1	0.67
|C-D|	3	1	2	2	0	1	1.50

Table 3: EMG – 6 sets measurements and average values

Position	6 sets measurements (Angle, degree)						Averaged values
	1set	2set	3set	4set	5set	6set	
Thigh	48	49	47	49	45	47	47.50
Knee	-11	-10	-11	-9	-10	-9	-10.00

4. Conclusion

Using two MPU-6050s, the waveforms of normal and abnormal postures were confirmed using the EMG of the proximal thighs of both thighs when squatting through this instrument. As a result of analyzing the collected data, it was confirmed that the symmetrical main rhythm waveforms differed in size, but similar waveforms appeared in some cases. Finally, we measured the sitting angle and the knee angle using the MPU-6050, and then compared the EMG values with the normal and abnormal positions. In addition, we were able to directly modify the posture in real time while viewing the result on the smartphone.

The data of this unit is the result obtained based on one person. Therefore, when applied to several people, it was judged that an error would occur due to differences in sex, age, and physique. Therefore, I suggest two ways to use this device in a wider range. First, apply the first one to as many people as possible, and use the clinical data to make an average value to create a reference value. Second, use the software to squat to the right posture and set the value as the reference value. Then, we propose a method to discriminate normal abnormality of the next obtained data value as a set reference value at the start of squat movement.

Acknowledgement

This paper was supported by Eulji University in 2018.

References

[1] Hermens H, Freriks B, Disselhorst-Klug C, Rau G , “Development of recommendations for SEMG sensors and sensor placement procedures”, J Electromyogr Kinesiol., Vol.10, pp: 361-374, 2000.

[2] Gullett JC, Tillman MD, Gutierrez GM, Chow JW, “A biomechanical comparison of back and front squats in healthy trained individuals”, J Strength Cond Res Vol.23, pp. 284-292, 2009.

[3] Saeterbakken AH, Fimland MS, “Muscle force output and electromyographic activity in squats with various unstable surfaces”, J Strength Cond Res., Vol.27, pp:130-136, 2013.

[4] R. E. Kalman, “A new approach to linear filtering and prediction problems,” J. Basic Eng., Vol. 82, no. 1, pp. 35–45, Mar. 1960.