International Journal of Engineering & Technology, 7 (3.19) (2018) 218-220

International Journal of Engineering & Technology

Website: www.sciencepubco.com/index.php/IJET

Research paper

Implementation of CMOS Min-Max Circuit in 0.13um

Mostapha Boussetta[1*], Ridouane Hamdaouy[2], Khadija Slaoui[3]

[1] *University Sidi Mohamed Ben Abdellah, LESSI Laboratory, Department of Physics Faculty of Sciences, Dhar El Mahraz B.P. 1796, 30003 Fez-Atlas,Morocco*

[2] *University Sidi Mohamed Ben Abdellah, LESSI Laboratory, Department of Physics Faculty of Sciences, Dhar El Mahraz B.P. 1796, 30003 Fez-Atlas,Morocco*

[3] *University Sidi Mohamed Ben Abdellah, LESSI Laboratory, Department of Physics Faculty of Sciences, Dhar El Mahraz B.P. 1796, 30003 Fez-Atlas,Morocco*

**Corresponding author E-mail: mostapha.boussetta@usmba.ac.ma*

Abstract

In this paper the outline and reproduction of a multi-input fluffy MIN and MAX circuits in light of another methodology taking simple plan points of interest, for example, low kick the bucket zone, fast, and effortlessness is considered. Particular current-mode circuits to acquire the base and greatest of N simple sources of info are depicted. The acknowledgment technique is reasonable for manufacture utilizing CMOS innovation. The circuit demonstrates the value of having high exactness and a substantial powerful range. Its activity is examined and outlined with recreation results. This multi-input fluffy MIN and MAX circuits were manufactured inside 130 nm BSIM3V3 CMOS innovation.

Keywords: *Analog Fuzzy Processor, Fuzzy Inference System, CMOS circuits, Fuzzy operators, Maximum circuit, Bounded difference, Minimum circuit.*

1. Introduction

Fluffy rationale is produced by Lotfi Zadeh to manage vulnerability in framework portrayal [1]. Over the most recent couple of years, fluffy controllers have discovered countless in fields, for example, master framework, design acknowledgment, mechanical autonomy, modern control, car industry, control drives and home apparatuses [2]. As of late, the fast development in the field of fluffy rationale and neural system had prompted the plan and improvement of high accuracy and high recurrence circuits for the equipment acknowledgment of these frameworks. For these applications ebb and flow mode systems to outline them is presently the subject of serious research exercises since offering preferences as far as power effectiveness, chip region and effortlessness [3],[4]. Despite the fact that, fluffy frameworks were executed utilizing programming or equipment, the traditional programming approach is huge in size and its task speed is low especially continuously applications. It in every case needs simple to advanced and computerized to simple converter interface for information and yield to manage continuous issues. This interface backs off the entire framework and makes its exactness reliant on this simple to advanced and computerized to simple converter. Hence, equipment execution of fluffy frameworks with rapid and high proficiency is required for continuous applications [5], [6]. The fluffy equipment execution proposed so far can be ordered into the computerized approach and the simple approach. The advanced approach is better than the simple approach in augmentation and simplicity of plan. Then again, the simple circuits shows better velocity and less control utilization than their computerized partners [7],[8]. For executing a FIS or fluffy processor by utilizing greatest and least capacities, the different information MAX and MIN circuits are required. The issues related with the present mode MIMO MAX and MIN circuit for fluffy surmising framework are amassed mistake and low task speed because of utilizing the parallel tree structure. To diminish the collected blunder, the one-organize "n" input MAX and MIN circuits have been presented in the writing. These methodologies are taking the benefit of the way that MOS transistor worked in immersion district leads the most extreme current for an offered entryway to-source voltage. Despite the fact that the circuit structure detailed in [8] appears to display a better execution looked at than other current-mode partners, it requires the utilization of 5n+1 transistor to actualize a "n" input Max administrator. This paper plans to exhibit another equipment acknowledgment of the multi-input MAX and MIN circuit in view of a similar standard. The proposed outlines have high precision, rapid and wide powerful range.

The max and min functions are widely used in computational systems such as fuzzy control and neural networks, as well as in applications with the highest / least required values. The LTA and multi-input circuits are called loser-take-all and (WTA) winner-take-all, respectively, and can be converted to one another under the Dharman law. In this paper, three different circuits are compared and the advantages and disadvantages of each one are investigated.

By 2020, major developments in the production of highly complex structures or components will emerge through the production of molecules in laboratories. However, given the challenges in this area, the likelihood that molecularly produced instruments with complex functions in this time-of-business cycle are highly downright.

Further developments in other nanostructured and functionalized nanostructures will continue to evolve in this period, as the market for these materials will grow as new features are discovered. However, the high-performance functions that have been

Copyright © 2018 Authors. This is an open access article distributed under the Creative Commons Attribution License, which permits unrestricted use, distribution, and reproduction in any medium, provided the original work is properly cited.

created only through molecular production methods will have a very significant impact on the field.

2. T-Norm and T- Conorm Operators

Triangular Standards (T-Standards) are middle of the road fluffy administrators dealing with the calculation of the terminating level of the tenets out of a fluffy derivation conspire. The Triangular CoNorm (or S-Norm) is the double administrator of the T-Norm playing out the inverse legitimate task. In this way, by applying De Morgan's law, it is anything but difficult to change a T-CoNorm into a T-Norm by a basic complementation of their sources of info and yields. Besides, if the enrollment capacities going before this task convey straight supplemented yields flag (CFMFs), the execution of the T-Norm utilizing T-CoNorm is additionally improved. For this situation, one just should supplement the yield flag of the T-CoNorm. On one hand, the participation capacities going before the T-Standards or T CoNorms convey current signs. Then again, it will be demonstrated later that the stage following the T-Norm or T-CoNorm (the total of the lead's consequents) can be effortlessly actualized in current space. For reasons unknown, current mode is a functional decision for the information yield interface prerequisites of these circuits. Along these lines, middle of the road current-to-voltage or voltage-to-current converters can be evaded. The most generally administrators utilized for the T-Norm and the T-CoNorm are the Base and Greatest capacities separately. Their electrical execution depends on numerous sources of info rectifiers-like plans, which are effortlessly accomplished utilizing CMOS transistors .The most well known fluffy rationale capacities which actualize legitimate "AND" and intelligent "OR" are MIN and MAX, individually.

2.1 Min-Max Implementation CMOS Circuits

Greatest (MAX) and Least (MIN) administrators are normally utilized to characterize the sentence connectives in any sort of fluffy controller. In Mamdani controller is characterized the fluffy ramifications and total instrument, likewise utilized in the fuzzification task utilizing participation work.

3. Bounded Difference Circuit

Bounded difference of Figure 1 with of the two variables x and y defined as:

$X \Theta y = x-y$; if $x \geq y$

0 ; if $x<y$, [where, x, y are two variables].

The bounded difference circuit can be obtained by the combination of a current mirror and a diode.

4. Maximum (MAX) Circuit

Greatest (MAX) as appeared in Figure 3 administrators in ordinarily utilized to characterize the sentence connectives in any sort of fluffy controller.- MAX capacity of two information sources x and y can be determined by utilizing limited distinction administrator and an Include (+) Administrator as takes after: MAX (x,y) =(xθ y) +y . MIN capacity of two information sources x and y can be determined by utilizing limited distinction administrator as takes after: MIN (x, y) = x Θ(x Θ y).

The Maximum task of this circuit depends on the common door to-source voltage comparing to the immersion esteem forced by the most extreme info current. In the plan of the Maximum circuit, the transistors are altogether coordinated and worked in their immersion locales. The deplete current of a MOS transistor worked in immersion area [20.21]. This circuit can be altered to fill in as n_ inputs MAX circuit.

5. Minimum (MIN) Circuit

For the proposed two input MIN circuit is as shown in Figure 1-3. By 2020, a number of Nano-technologies that have emerged in the early 21st century will likely enter into products and applications. Until then, new types of low-cost sensors that can easily be used in buildings and infrastructures will be external to themselves. Similar to the use of video drives for physical monitoring, chemical and biological sensors, along with other care and communication technologies, will be used to diagnose possible threats. In some cases, new devices may be integrated with existing caring and communication structures (such as video cameras, motion sensors, and phones). For example, future buildings and structures that are particularly vulnerable to threats can have advanced care systems that integrate the image with chemical vibrational diagnostic systems and require very little human intervention. Many of these systems are designed to monitor the range of the factors involved and will be able to report the results within a few minutes.

Other potentially useful applications include Nanotechnology-enabled sensors, including front-end systems of buildings, automotive control systems, and home security equipment's such as carbon monoxide and smoke detectors. Future developments in the field of high-end sensors without need for care. , Requires a lot of development in the capacity and management of battery power and the study of fluids for the microscope. For some specific or high-security or national security related functions (such as military applications or emergency reactions), wearable sensors will be widely available; these sensors will be associated with a comprehensive communications network that will be able to contact each person with agents (Chemical or biological), as well as the location and level of contact, as quickly as possible. Also, in the next 15 years, further advances will be made in the choice of the chemical and biological sensitivity of all sensors.

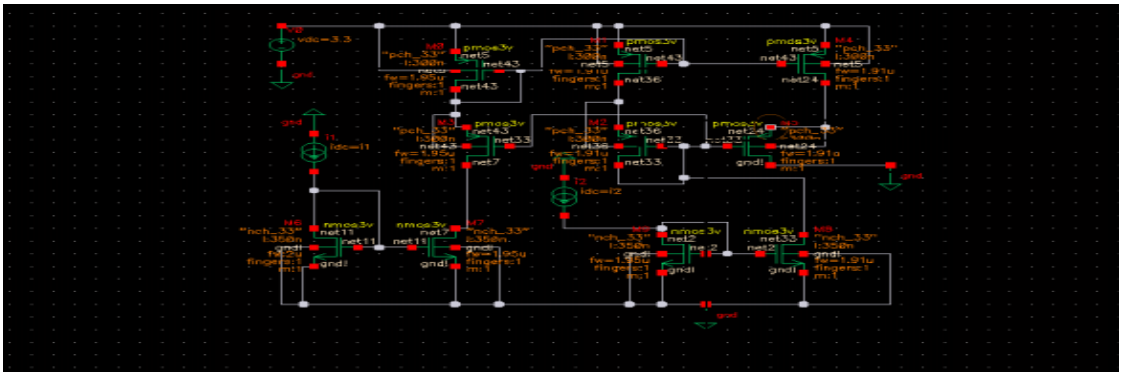

Fig 1: A two input MIN circuit.

For inputs for example three-input MAX circuit are as shown in Figure below.

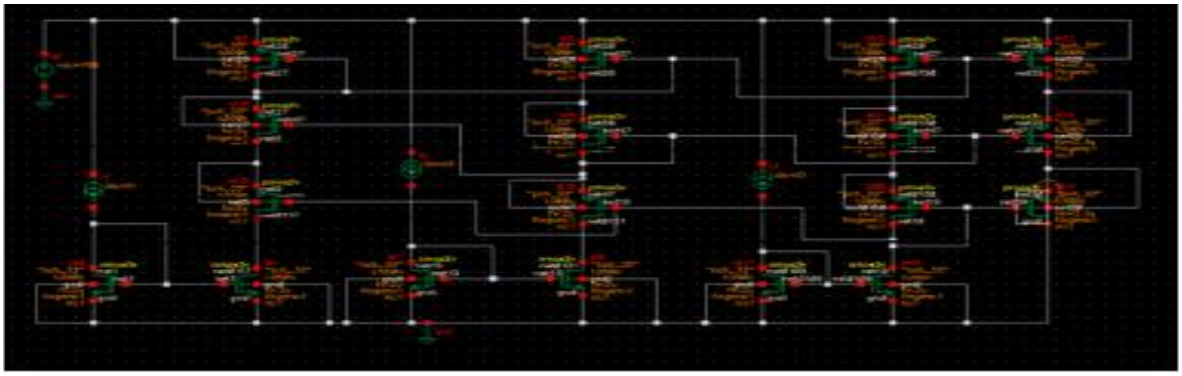

Figure 2: Three inputs MIN circuit.

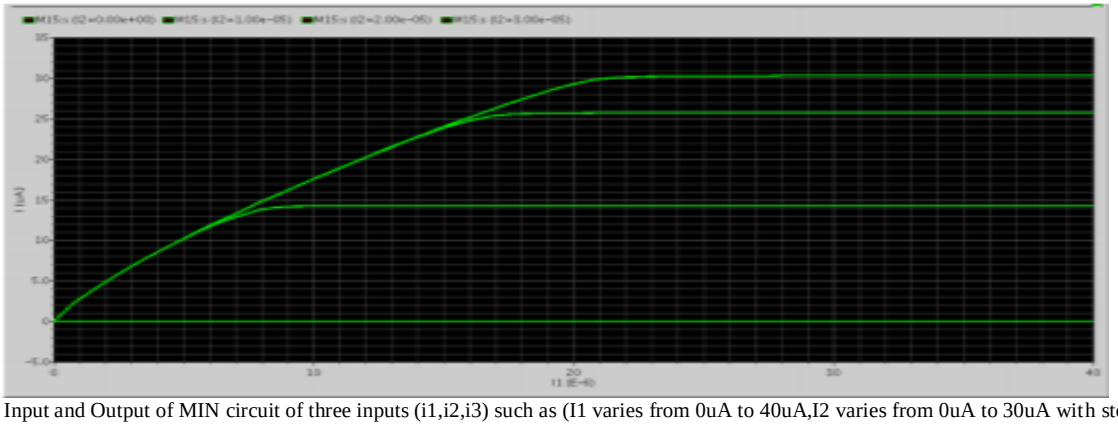

Figure 3: Input and Output of MIN circuit of three inputs (i1,i2,i3) such as (I1 varies from 0uA to 40uA,I2 varies from 0uA to 30uA with step=10uA and I3=30uA).

6. Conclusion

In this paper we have displayed an exceptionally basic current-mode different information least and greatest circuit for fluffy surmising framework utilizing CMOS innovation 0.13um. The different information least circuits are one-arrange circuit with high precision and have a vast powerful range. These structures are straightforward and secluded, so it very well may be effectively extended to meet the necessity of multi-input signals MIN and MAX circuits. Based on the reenactment results, it is apparent that the proposed circuit has the right capacity and sensible level of accuracy.

References

[1] L. A. Zadeh, "Fuzzy Sets," Information and control, vol. 8, pp.353-383, 1965.

[2] TUAN, V. Communicative Competence of the Fourth Year College Students: Basis for proposed English Language Program, Astra Salvensis, Supplement No. 2, 2017, p. 45

[3] O. Ishizuka, K. Tanno, Z. Tang & H. Matsumoto, "Design of a Fuzzy Controller with Normalization Circuits," Second IEEE Int. Conf. on Fuzzy Systems, pp.1303-1308, San Diego, CA, USA, March 1992

[4] T. Yamakawa, "A Fuzzy Inference Engine in Nonlinear Analog Mode and its Application to a Fuzzy Logic Control," IEEE Trans. on Neural Networks, vol. 4, no. 3, pp. 496-522, May 1993.

[5] Nematollahisarvestani, A., Shamloo, A., Dynamics of a magnetically rotated micro swimmer inspired by paramecium metachronal wave, Progress in Biophysics and Molecular Biology, In Press, 2018, https://doi.org/10.1016/j.pbiomolbio.2018.08.002.

[6] S. Aminifar, A. Khoei, Kh. Hadidi and Gh. Yosefi, "A digital CMOS fuzzy logic controller chip using new fuzzifier and max circuit," AEU - International Journal of Electronics and Communications, Volume 60, Issue 8, 1 September 2006, Pages 557-566.

[7] T. Serrano-Gotarredona and B. Linares-Barranco, "Experimental results on the current-mode WTA-MAX circuit with multichip capability," in 1997 IEEE Int. Symp. Circuits and Systems (ISCAS'97), Hong Kong, 1997, vol. 1, pp. 561–564

[8] Irina MALGANOVA, Andrey ERMAKOV, Development of heating Devices from Polypropylene, Astra Salvensis, Supplement No. 2, 2017, p. 93.