International Journal of Engineering & Technology, 7 (3.27) (2018) 627-630

International Journal of Engineering & Technology

Website: www.sciencepubco.com/index.php/IJET

Research paper

Propagation Studies in Free Space Using RZ and NRZ Optical Links Under Atmospheric Turbulence

K.Sony*[1], K. Sarat Kumar[2#], K.CH. Sri Kavya [3#]

[1]*Asst Prof ,KLEF Vaddeswaram*
[2,3#]*Professor,KLEF Vaddeswaram*
**Corresponding author E-mail: sonykarra@kluniversity.in*

Abstract

Free Space optics provides a solution for the growing bandwidth requirements of internet applications. It offers a better solution for bottleneck problems of connectivity but faces a major problem due to atmospheric effects such as Haze, Fog, Snow, Rain. The work modeled here deals about providing a system designed for the FSO link which can offer efficient transmission of data up to 3km considering the influence of Fog while transmission with better Quality factor and minimum Bit error Rate and also does a comparative analysis of two system designs of FSO with a single source and with array of lasers at operating wavelength of 850 nm using the Wavelength Division Multiplexing with both RZ and NRZ Formats.

Keywords: *Attenuation; BER (Bit error rate);FSO(Free space optics);WDM(Wavelength division multiplexing),Quality Factor.*

1. Introduction

Information can be carried between the systems using any channel such as optical fiber,satellite links,microwave links etc., depending upon the requirement.FSO is one such channel where the medium through which the message is transmitted is free space. Conceptually it is very similar to Optical fiber transmission but the only difference is that light transmits through glass in opticalfiber whereas in FSO the transmission is through air.As light travels more faster in air than that in glass we can easily say that FSO supports high speed data rates.As there is a rapid growth in the requirement of bandwidth FSO will serve such problems as it can operate at higher frequencies and works best at narrow wavelength regions[1].

As the medium is air for transmission FSO suffers from atmospheric effects such as Fog,Haze,Snow,Rain,atmospheric absorption and beam dispersions etc.,which reduces the quality of the signal and increases the BER[2][3], if suitable modulation techniques and proper correcting codes are choosen to design the system attenuation can be minimized.

1.1 Advantages of FSO:

- License Free:Unlike microwave and satellite links,FSO is a free licensed channel and with no spectral limitations ,so many service providers can use it for transmission .
- Long Distance Communication:As it travels with speed of light the information can be transmitted for long distance but due to atmospheric effects it gets limited to 10kms.
- High Data Rates:As it operates at higher frequencies and narrow wavelengths higher data rates can be achieved by deploying proper coding techniques.

2. Modeling of an FSO System

The block diagram of an FSO comprises of the following blocks[4]: Transmitter,Channel ,Reciever.The transmitter in general can be a laser source or an Led .As we require line of sight propagation and to reduce the errors in transmission we will use laser as the source.The message signal can be a voice,text or the video signal and with laser as a carrier the signal gets modulated using MZ Modulator.The signal is then forwarded through the FSO channel .If the message signal is been transmitted for longer distances a regenerator circuit is used to retain its signal strength[5].

An erbium doped fiber amplifier is also used to increase the strength of the signal After undergoing the atmospheric effects the signal is then demodulated and a PIN Photodiode of suitable responsivity is choosen to detect the signal .As the distance increases noise gets which degrades the signal quality so a low pass filter is choosen with a cut off frequency to eliminate the noise persisting in the signal. Further to reduce the error different data formats can be choosen such as RZ ,NRZ etc.,

The block diagam illustrating the process of FSO transmission is given in Fig 1

Copyright © 2018 Authors. This is an open access article distributed under the Creative Commons Attribution License, which permits unrestricted use, distribution, and reproduction in any medium, provided the original work is properly cited.

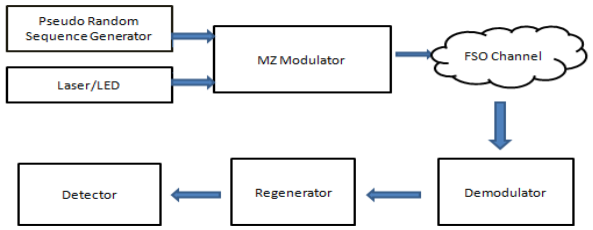

Fig 1: Block Diagram Representing the FSO System

When the signal passes through free space if it undergoes attenuation due to the effect of Fog.The attenuation can be computed based on the visibility(Km) and the empirical relationship can be computed using the Kim Model ,depending upon the size of the particle k. The specific attenuation can also be calculated for fog using Kruse model .The equation stating the KIM Model is:

$$k=\begin{cases}1.6 & (V>50\ Km)\\ 1.3 & (6<V<50\ Km)\\ 0.16V+0.34 & (1Km<V<6Km)\\ V-0.5 & (0.5Km<V<1Km)\\ 0 & (V<0.5Km)\end{cases} \quad (1)$$

Where V is the visibility in Km,k is the particle size.

The bit error rate can also be computed for evaluating the performance of the system which is given the empirical relationship as follows:

BER=No of bits in error/Total no of bits in transmission (2)

BER and quality factor determines the efficiency of any system where if the no of bits in error are more,it reduces the quality factor and vice versa.

$$BER=1/2\ erfc(Q/\sqrt{2}) \quad (3)$$

3. Design Parameters of the system

The FSO system has been designed using optisystem the parameters that are chosen for the link are tabulated below in Table 1.The link has been designed for the link distance of approximately 1-3km.The geometrical losses along with absorption losses are not being considered but,atmospheric effects have been taken into account .The system uses a 850nm wavelength of laser source with the input power of the laser as 10dBm[6].

Table 1: Design Parameters of FSO System

S NO	NAME	VALUE
1	Attenuation	0-4 (dB/Km)
2	Range	1-3 Km
3	Additional losses	Nil
4	Geometrical losses	0 dB
5	Transmitter aperture diameter	5cm
6	Receiver aperture diameter	10cm
7	Receiver loss	0dB

3.1.1 System 1:

The System 1 has been designed with an array of lasers each operating at an wavelength of 850-855nm.As we have four input sources an multiplexer is used which can carry all the messages on a single channel.

A Pseudo Random Bit Sequence Generator is used to generate a message signal .A MZ Modulator modulates both the signals and then passes through FSO. An NRZ Pulse generator will generate the pulses .As the multiplexer will carry all the signals, at the de-modulator end a de-Mux is deployed ,a BER Analyzer is used to analyze the Bit error rate os the system and its quality factor,along with the eye opening and closure.

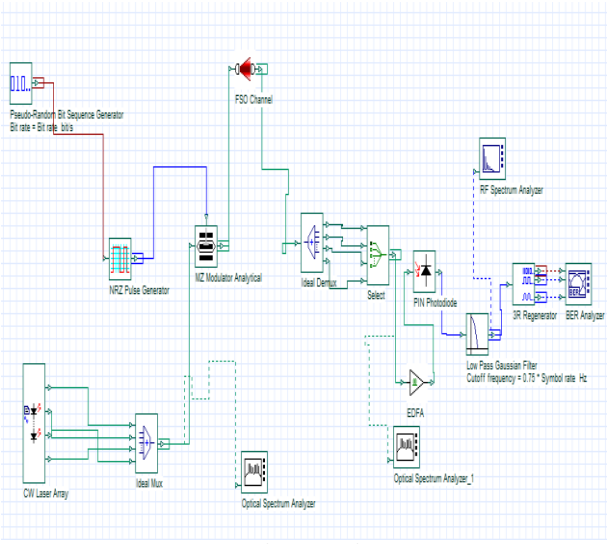

Fig 2: Layout for array of CW Laser inputs

The Visibility has been choosen depending on the fog conditions as dense or thin fog and attenuation has been calculated using kim model.Both RZ and NRZ formats are used to find out which will yield a better quality factor and BER.

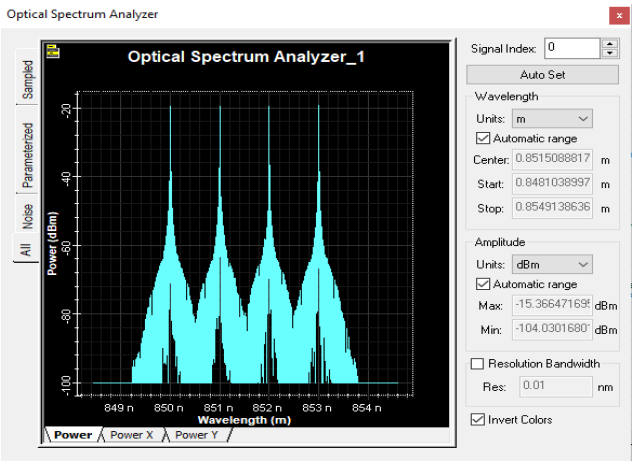

Fig 3: Optical Spectrum Analyzer for array of signal sources at 850nm

The Bit error rate for few of the visibilities can be observed as follows[7] :

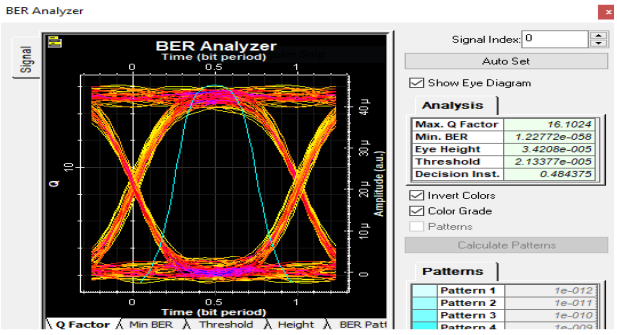

Fig 4: BER Analyszer for V=1 Km for NRZ format

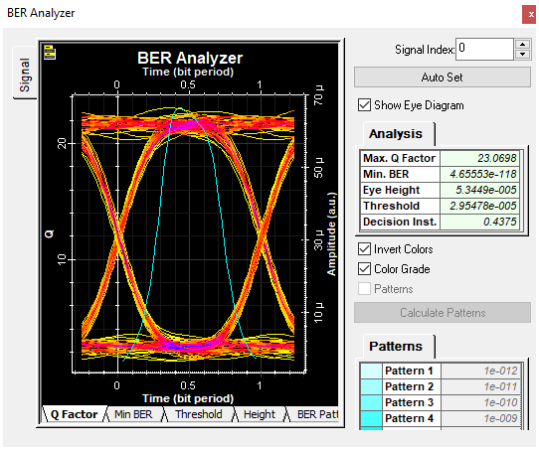

Fig 5: BER Analyszer for V=2 Km for NRZ format

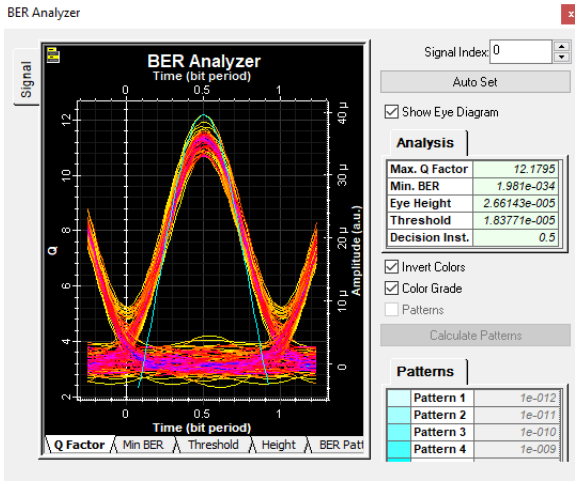

Fig 6: BER Analyzer for V= 1km for RZ Format

3.1.2 System 2

System 2 has been designed with a single wavelength laser operating at a frequency of 850nm .It doesn't require any WDM as it produces only one input signal for transmission[8][9] .

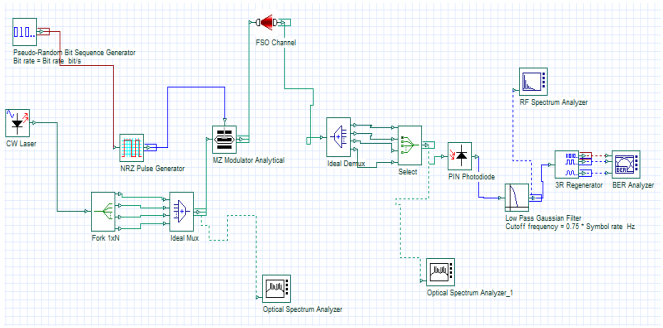

Fig 7: Layout of single CW Laser input

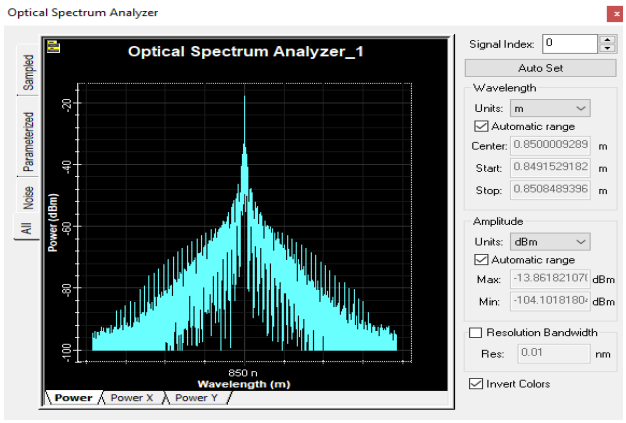

Fig 8: Optical Spectrum Analyzer for single wavelength laser .

The bit error rate for few of the models can be observed as follows

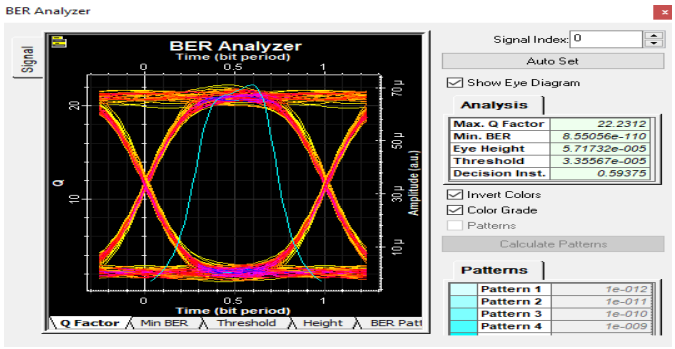

Fig 9: BER Analyzer for V= 1km for NRZ Format

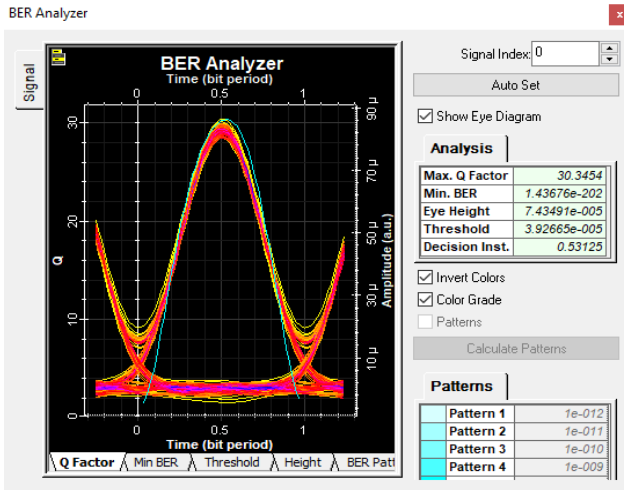

Fig 10: BER Analyzer for V= 1km for RZ Format

4. Results and Discussions

Comparative Analysis study has been carried out between the systems both operating at 850nm using RZ and NRZ formats[10] .

Table 2: Table representing Q for System 2

SNO	VISIBILITY	ATTENUATION(db/Km)	Quality factor(NRZ)	Quality factor (RZ)
1	10	0.222	45	40
2	2.5	1.133	41	34
3	2	1.466	37	30
4	1.5	1.916	33	29
5	1	3.128	22	54

Table 3: Table Representing Q for system 1

S NO	VISI-BILITY	ATTENUA-TION(db/Km)	Quality factor	Quality fac-tor (RZ)
1	10	0.222	29	26
2	2.5	1.133	27	21
3	2	1.466	24	19
4	1.5	1.916	22	15
5	1	3.128	15	12

From the system setup 1 and 2 we can easily decide that if attenuation increases the quality factor reduces .From table 2 it gives the relationship between q and attenuation for RZ and NRZ format operating at an wavelength of 850nm with a array of lasers as its input .

From the table 3 if rge relationship between RZ and NRZ formats are observed highest quality factor can be achieved using NRZ format .

So for effective performance of the system in terms of high data rates it is better to choose the system operating at 850nm wavelength and using a single wavelength laser as its source for achieving better quality factor and less BER.

Future Scope

The work can be effectively carried out for different wavelengths to obtain higher quality factor and less BER as free space is all about transmission of data for longer distances with less attenuation and better efficiency.As FSO works better at narrow wavelengths its easier to obtain high bandwidth so work can be carried out at 1550nm to check for the possibilities.

References

[1] Sony,K. Modelling the systems for improvised performance in FSO Networks,Journal of advanced research in dynamical and control systems,Volume 9,Issue Special Issue 14,2017,Pages 2627-2636.

[2] Keiser, G., optical fiber communications, McGrawHill Company, 2000.

[3] Keiser, G., optical essential communications, McGraw-Hill Company, 2004

[4] Agrawal, G. P., Fiber-Optic communication system, John Wiley and Sons, 4th edition, 2010.

[5] Majumdar, A., Free-Space Laser Communications: Principles and Advanced, springer science+business media, LLC, 2008

[6] Lubna Nadeem, Performance of FSO Links using CSRZ, RZ, and NRZ and Effects of Atmospheric Turbulence, J. Opt. Commun. 2017, DOI 10.1515/joc-2016-0113.

[7] Kaur A, Sheetal A. Performance analysis of 16 × 2.5GB/s FSO system for the most critical weather conditions. Int J Adv Res Comput Commun Eng 2015 May;4(5):612–8.

[8] Chawla A, Mishra S, Aarthi G. Simulation research of free-space optical communication based on linear polarization shift keying modulation. ARPN J Eng Appl Sci 2015 Aug;10(14):6116–20.

[9] Jia W, Matsui Y, Mahgerefteh D, Lyubomirsky I, Chan CK. Generation and transmission of 10-Gbaud optical 3/4-RZDQPSK signals using a chirp-managed DBR laser. J Lightwave Technol 2012;30(21):3299–305.

[10] Zhou X, Nelson LE, Isaac R, Zhu B, Peckham DW, Borel PI, et al.. PDM-Nyquist-32QAM for 450 Gb/s per-channel WDM transmission on the 50 GHz ITU-T grid. J Lightwave Technol 2012 Feb;30(4):553–9.