*International Journal of Engineering & Technology*, 7 (3.32) (2018) 127-131

International Journal of Engineering & Technology

*Website: www.sciencepubco.com/index.php/IJET*

***Research paper***

# Reduction of Energy Consumption in Hotels with Aerothermal Energy. Case Study: Canary Islands (Spain)

**Francisco Javier Díaz Perez[1]*, David Chinarro[1], Mª Rosa Pino Otín[1], Ricardo Díaz Martín[2], and Adib Guardiola Mouhaffel[3]**

[1]*Universidad San Jorge, Zaragoza, Spain.*
[2] *Universidad a Distancia de Madrid (UDIMA), Madrid, Spain.*
[3] *Universidad de las Palmas de Gran Canarias, Gran Canarias, Spain*
**Corresponding author E-mail: fjdiazp@usj.es,*

## Abstract

This article presents a management model and control of energy efficiency in hotels adapted to the consumption patterns that ensure the comfort requirements of customers and integrated into the environment of an intelligent tourist complex. The analysis of the hot water system (DHW) of two hotels in the Canary Islands (Spain) in relation to their occupation, yields a solution based on renewable energies using high temperature heat pumps with aerothermal dissipation and supported by boilers of existing LPG propane. The control by programmable automatons (PLC) integrated in a system of control and acquisition of data (SCADA) optimizes the systems to maintain the maximum accumulated energy during the periods of cheapest electric tariff, by means of a system of opening and closing of hydraulic Valves that It manages to adjust the demand of DHW consumption to achieve the highest energy accumulation during the hours with the cheapest electricity tariff. The result after two and a half years of activity registration is a faster return on investment due to the optimized energy management of the system, through the control of operating hours adjusted to the needs of customers and the hourly rate. It has also been predicted that during the estimated 12 years of the system will have saved more than € 1,179,737 and thermal 8,780,005 kWh in a hotel 1 and € 1,315,104 and thermal 9,522,301 kWh in the hotel 2. This model shown can be seen how economically and energetically very efficient.

***Keywords***: *DHW, energy efficiency, hotels, aerothermal energy, SCADA, PLC.*

## 1. Introduction

The constant increase of tourism in Spain is a fact, and this past year 2017 has again increased by 4.4% tourist GDP, now standing at 11.5% of total Spanish GDP ***[1]*** and giving work to 13 % of the employed population, which has led the sector to outstanding positions in the Spanish economy and enables both hotel and extra hotel accommodation have begun to remodel their facilities and equipment. Within these initiatives of improvements, and due to the new awareness of customers towards the environment, great efforts have been made in favour of the sustainability of the tourist destination and energy efficiency of the facilities. The hotel companies have worked in recent years, in the implementation of energy saving and efficiency measures in multiple facilities, betting on the reduction of consumption and greenhouse gas emissions (GHG), through the implementation of energy management methods and of information and communication technologies in monitoring and control systems. This new "green revolution" of the tourism business is well encouraged by the European Union (EU), defining goals in reducing $CO_2$ emissions to 20% by the year 2020 compared to the 1990s and establishing that 20% of the Total energy consumption is supplied by renewable energies (EERR) ***[2]***. In addition, new objectives have already been established for future stages ***[3]***, setting a reduction of 40% in emissions by 2012, compared to 1,990, 27% of EERR, increase in energy efficiency by 27-30% and 15% electric interconnection, that is, that the electricity generated in the EU can be transported to other member states. By the year 2050, the EU has imposed an 80-95% reduction in greenhouse gas emissions compared to 1990 levels. With these guidelines for improvement in energy management and saving, the tourism sector has launched a "green revolution", based on the implementation of technologies to reduce consumption and the certification of establishments and destinations, which leads to an increase in the different certification systems and certified companies, as can be seen in ***Table 1*** , where the main current environmental management and energy management certifications are being applied is the hotel establishments.

**Table 1.** Main environmental and energy certificates.

| Name | Certificator |
|---|---|
| Ecolabel Europa ***[4]*** | European Comission |
| Aito Star ***[5]*** | Association Of International Tour Operators |
| Biosphere ***[6]*** | Biosphere Responible Tourism |
| Earthcheck ***[7]*** | Ec3 Global |
| Emas ***[8]*** | European Comission |
| Green Globe ***[9]*** | Green Globe Ltd |
| Iso 14001 ***[10]*** | International Organization For Standardization (Iso) |
| Iso 50001 ***[11]*** | Iso |
| Leed ***[12]*** | U.S. Green Building Council |
| Travelife ***[13]*** | Travelife Ltd |
| Step ***[14]*** | Sustainable Travel Internationsal |
| Ecolideres ***[15]*** | Tripadvisor |

The importance of these changes is due to two clear reasons. The first is the need to reduce the energy consumption of the facilities, meeting the expectations of customers without reducing the services offered. The second is due to the change in mentality of

**Copyright © 2018 Authors. This is an open access article distributed under the Creative Commons Attribution License, which permits unrestricted use, distribution, and reproduction in any medium, provided the original work is properly cited.**

customers, who begin to value destinations and establishments in response to the environmental sustainability of their facilities and services. Within these tourist destinations, we have taken as example two establishments in the Canary Islands (Spain), where the tourism sector is the main engine of the economy, representing 34.3% of GDP in 2016 and generating 39.7% of GDP. % of employment in the islands ***[16]*** and being an important factor in their labour mobility ***[17]***. Tourist stays have increased by 27% from 2010 to 2016 ***[18]*** in an archipelago where 63% of its territory is declared a biosphere reserve by UNESCO ***[19]***. In this singular tourist area, we focus our attention on the study of the DHW systems of two hotel establishments on the island of Fuerteventura.

The reason is that it has been proven in multiple investigations as the sum of the air conditioning and the DHW are the main energy consumers, depending on the percentage of each of the geographical area of study. For example, in Caribbean hotels, 48% of electric power is consumed in air conditioning (AA) ***[20]***, in Hong Kong AA accounts for 45% of electricity consumption ***[21]***, in hotels in the Balearic Islands the total energy consumption is between 22% for the DHW, the AA 14% and the heating 21% ***[22]***, in the hotels in the United States the consumptions are divided in a general way with the air conditioning 31% AA the 15% and the DHW 17% and the rest for other uses ***[23]***, in Britain the typical distribution is 47% in heating and 20% in DHW ***[24]***, and in Greece the typical distribution is 35% in heating, 15% in AA and 22% in DHW ***[25]***. Considering the consumption of customers per day, which vary according to zones and type of hotel, we can verify the importance of reducing these consumptions on the total energy needed for a hotel, which has been studied by several authors ***[26, 27, 28, 29, 30].***

## 2. Methodology

The installations analysed belong to two four-star hotels of 333 and 354 rooms, designated as H1 and H2 respectively, as they cannot be named due to the data protection of both companies, where their DHW-based heating systems have been replaced, propane LPG boilers, by systems based on aerothermy technology of high temperature heat pumps. The data that are initially counted are the annual occupation and the total consumption of LPG propane. By means of the studies of previous facilities of hotels of the same category and climatic zone, and of the norms of calculation ***[31]***, it has been verified that the average consumption of the clients is of about 70 L/day of DHW, and the percentage of consumption of total LPG propane by the DHW with respect to the remaining consumers -furniture and laundry according to cases- is between 60% and 75% of total consumption ***[32]***. With this starting data and once the possible heating systems were chosen, the possibility of using a system based on aerothermy and biomass was studied, whose forecasts of operating expenses and initial investments can be checked in ***Table 2***, where it was calculated a theoretical coefficient of performance (COP) for heat pumps of 2.4, much lower than the real one. To make forecasts as accurate and real as possible, it is necessary to have the greatest number of exact values and not estimates, for which the energy management of the establishments is fundamental to be able to perform these calculations of energy system improvements

The chosen result of the alternatives analysed has been aerothermy as a system to be implemented in both hotels, considering the number of companies that know these technologies and that the biomass fuel in the Canary Islands is not yet widespread and its performance is reduced due to transport, as has been demonstrated in several studies ***[33,34,35]***. The solution consists of high temperature heat pumps of 151.2 kW and 201.6 kW in the H1 and H2 hotels respectively, which are supported in a timely manner by the existing boilers and regulated by a PLC-based control system with connection to a computer through a SCADA system.

**Table 2:** Projection of consumption and installation expenses.

| ***Previous*** | ***Hotel H1 (333 Rooms)*** | ***Hotel H2 (354 Rooms)*** |
|---|---|---|
| *Total Hotel Lpg Expenditure In Kg/Year* | *100,455 Kg* | *142,260 Kg* |
| *Total Glp Expense In Dhw In Kg/Year* | *70,318 Kg* | *99,582 Kg* |
| *Thermal Needs Dhw In Kwh/Year* | *801,839 Kwh* | *1,135,531 Kwh* |
| *Lpg Cost €/Year* | *123.057 €* | *174.268 €* |
| ***Projected*** | ***Heat Pump*** | ***Heat Pump*** |
| *Necessary Investment* | *135.000 €* | *145.000 €* |
| *Consumption Electric In Kwh/Year* | *334.100 Kwh* | *473.138 Kwh* |
| *Cost Of Electricity* | *30.069 €* | *42.582 €* |
| *Saving Compared Lpg* | *92.988 €* | *131.686 €* |
| *Amortization In Years* | *1,45* | *1,10* |

For the calculations of the system so that it complies with the current regulations, the European Commission's guidelines for estimating values that can consider energy from renewable sources in operation of heat pumps according to dissipation systems have been considered ***[36]*** and considering the data on the efficiency of the equipment that regulates the seasonal yield factor (SPF) ***[37]***. For its part, the Institute for Energy Diversification and Saving (IDAE) has a document (it does not replace the standard) and according to this ***[38]***, the SPF will be calculated multiplying its nominal benefits (COP) by a factor called representative weighting factor (FP) and by a correction factor (FC) for the different technologies and applications of electrically driven heat pumps.

## 3. Calculus

Initially we performed the calculations of the total COP of the equipment considering the operating temperature and the environmental dissipation for Fuerteventura and in the tables of the manufacturer the values of electric consumption and thermal generation are obtained. Considering the system used for high temperature heat pumps with dissipation by aerothermy, which are formed by an external LG brand machine, model ARUN 160 LTE4, unit capacity of 50.4 kW, EER 4.30: SEER 7.27; COP 4.42 and 2 internal units of hydrokit brand LG model ARNH 08 GK3A2, with 25.2 kW of heat power, 80ºC of maximum water outlet temperature, and in each hotel is formed by 3 or 4 systems to get the 151.2 kW or 201.6 kW thermal.

$$COP_{60ºC} = E_{Thermal} / (E_{Elect_\ inside} + E_{Elect_outside}) \quad (1)$$

$COP_{60ºC}$ = 50.4 kWt / (7.68 + 2 x 4.87) kWe = 50.4 kWt / 17.42 kWe = 2.89

To determine the SPF of the heat pump we need to know the corresponding FP and FC. The FP will be obtained in the tables of the IDAE ***[38]*** 4.1 according to the climatic zone of the hotel site and to the type of heat pump used and the FC in the table of the IDAE 4.2 with a COP calculated for 60ºC. Fuerteventura is an area of climatic severity in winter A ***[39]*** and the type of heat pump is aerothermal. Centralized equipment, so FP = 0.87. The temperature chosen for the preparation of the ACS is 60 ° C, so FC = 1.

$$SPF = COP_{nominal}\ 60ºC \text{ x } FP \text{ x } FC \quad (2)$$

SPF= 2.89 x 0.87 x 1 = 2.51

Once it has been verified that the SPF of the pump exceeds the minimum of SPF = 2.5, it can be considered that the heat produced by the pump comes from a renewable source of both facilities. Now the amount of renewable energy is calculated, in accordance with the decision of the commission on calculation guidelines ***[40]*** is calculated with the following formula:

$$E_{res} = Q_{useful} \text{ x } (1\text{-}1/SPF) \quad (3)$$

$$Q_{useful} = H_{hp} \text{ x } P_{rated} \quad (4)$$

Where are you the amount of renewable energy supplied by heat pump technologies, $Q_{useful}$ estimated total useful heat provided by

heat pumps [GWh], $H_{hp}$ equivalent hours of full load operation [h] and $P_{rated}$ power of installed heat pumps, considering the duration of the different types of heat pumps [GW].
Values for hotel H1:

$Q_{useful1}$ = 1170 x 151.2 x 10-6 = 0.176904 GWh
$E_{res_min1}$ = 0.176904 x (1-1/2,5) = 0.106142 GWh
$E_{res1}$ = 0.176904 x (1-1/2,51) = 0.106424 GWh
Percentage of renewable energy = 0.106424 / 0.176904 = 60.16%

Values for hotel H2:

$Q_{useful2}$ = 1170 x 201.6 x 10-6 = 0.235872 GWh
$E_{res_min2}$ = 0.235872 x (1-1/2,5) = 0.141523 GWh
$E_{res2}$ = 0.235872 x (1-1/2,51) = 0.141899 GWh
Percentage of renewable energy = 0.141899 / 0.235872 = 60.16%

***Fig. 1*** shows the operating scheme of the hotel's DHW system, with both hotels being the same. The systems consist of 5 accumulators of 5000 L - three for direct heating by boilers / heat pumps and 2 for preheating by recovering air conditioning (AA) -, the corresponding exchangers and circulation pumps. The primary boiler circuits are 2 boilers 280 kW in the H1 hotel and 2 boilers 290 kW in the H2. The circuits of the heat pumps in the H1 hotel are 3 heat pumps and in the H2 it is formed by 4 heat pumps as well. The principle of operation is as follows: priority to the heat pumps for the heating of the 3 DHW, ACS 3, 4 and 5 accumulators, and in case 45 min did not reach the set temperature (61ºC) they would enter the boilers as a support system, motivated by Legionella control regulations ***[41]***. The AA recovery system preheats the 2 ACS 1 and 2 accumulators. Two motorized valves have been added to this system, which are indicated in the diagram as "night valves", which are activated when the AA system is not operating and in the most economical electricity tariff schedule P6, to accumulate the largest amount of water at the working temperature, for which the operating temperature setpoint of the high temperature heat pumps (2nd set point) is also increased, at 65ºC, in order to accumulate in the 5 existing accumulators the maximum possible energy during the periods of lowest price of the same and in this way, reduce the average price of the useful electric kWh used for the heating of the DHW of the establishments. In the SCADA you can put the different the different pump controls, system temperatures, access to the programming of the operating hours and the operating status of the equipment.

## 4. Results and Discussion

The systems were launched in the hotels in September and December 2015 at the H1 and H2 hotel respectively. The results, after two and a half years of activity, have been very satisfactory, with a return on investment faster than initially projected. Also, be checked as by means of the possibility of adjustments, of times, hours of operation and temperatures can be obtained greater savings with a correct management of the parameters as it is carried out in the hotel H1 with respect to the H2. ***Fig. 2*** shows the graphs of energy consumption and expenditure per client-day of ACS of the hotels, graphically checking the decrease of these in 2016-2017 due to the new installation of aerothermy. With these new equipment, a drastic reduction of energy consumption in ACS has been achieved, as well as the emissions associated with LPG boilers, with higher savings in the H1 hotel compared to the H2 due to the adjustment of the system by the equipment hotel maintenance.

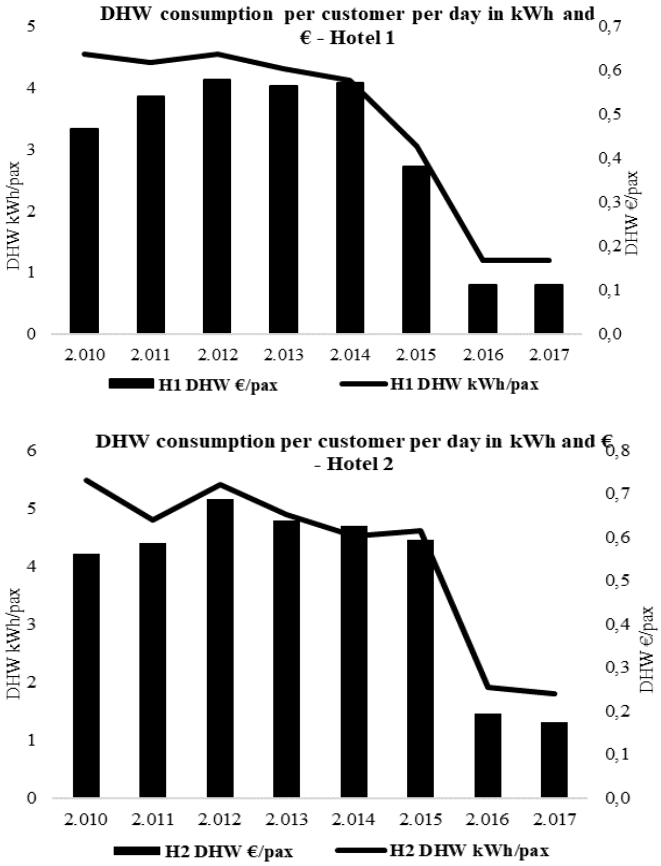


**Fig. 2.** Graph of decrease of energy consumption and economic expense in DHW per night customer.

***Table 3*** shows the evolution of energy and economic costs of the establishments, with a result of a reduction in energy consumption to produce the ACS between 72.7% and 63% per hotel respectively. It also shows that the average spending on ACS per client hosted in recent years (2010-2014) compared to the 2016-2017 year has decreased by 79.4% and 70.3%, from an average of € 0.54 / customer night (=pax) and 0.62 € / pax has gone to 0.11 € / pax and 0.19 € / pax for each hotel respectively. We compare the sav-

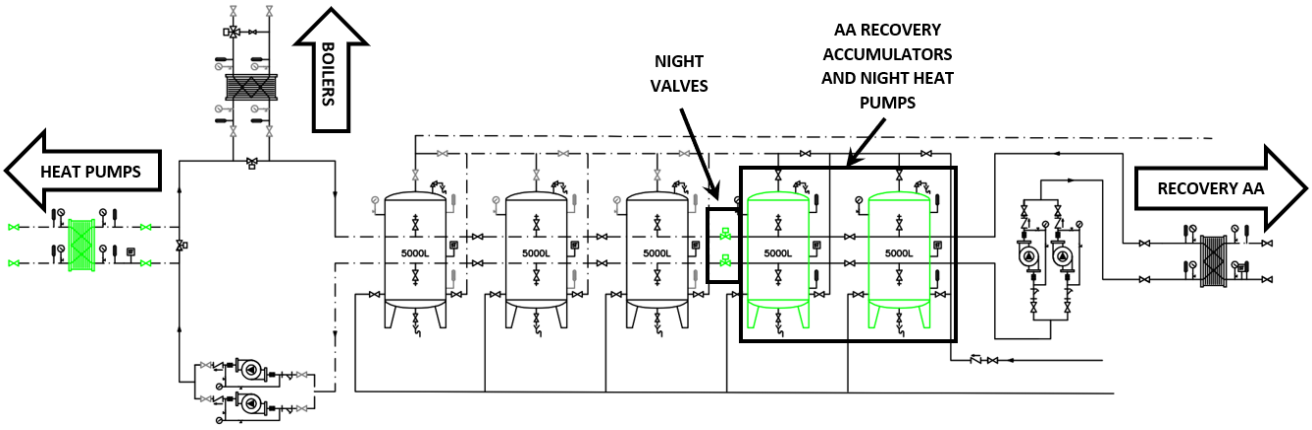


**Fig. 1.** Diagram of operation of the DHW system of the study hotels.

ings data for the years 2010 to 2014, since 2015 was launched at the end of the year, it is verified that due to the price of the kg of LPG, the amortization of the equipment has taken place in less time than the one that it was estimated, since also the actual consumption has been lower than projected due to PLC control that optimizes the operation by schedules. As a result, the installation has already been amortized in the time it has been running and is currently generating benefits. The total energy saving in annual kWh is greater than 600,000 kWh in both systems. The approximate consumption of LPG by the support boilers has been considered 5% of the total gas consumption in the H1 hotel and of 15% in the H2, due to the excessive punctual consumption of DHW in peak hours, mainly during the mornings between 8:00 a.m. to 9:00 a.m. hours and afternoons between 6:00 p.m. to 7:00 p.m., with the support of the boilers being necessary so as not to oversize the installation of heat pumps. The difference in gas consumption is due to the use of more optimized control systems in the H1 hotel than the H2, with a difference of more than 35.5% between the energy consumed per client of one hotel with respect to the other.

**Table 3:** Values of energy and economic consumption per customer and day obtained.

| H | Type | 2010 | 2011 | 2012 | 2013 | 2014 | 2015 | 2016 | 2017 |
|---|---|---|---|---|---|---|---|---|---|
| 1 | kWh/pax | 4.54 | 4.40 | 4.54 | 4.30 | 4.13 | 3.06 | 1.20 | 1.20 |
| | €/pax | 0.47 | 0.54 | 0.58 | 0.56 | 0.57 | 0.38 | 0.11 | 0.11 |
| 2 | kWh/pax | 5.47 | 4.79 | 5.41 | 4.88 | 4.52 | 4.60 | 1.91 | 1.80 |
| | €/pax | 0.56 | 0.59 | 0.69 | 0.64 | 0.63 | 0.59 | 0.19 | 0.18 |

With the data obtained, the following ***Table 4*** of expenses and savings produced by this change in the energy model is generated. Considering that the equipment has an average life of 12 years of the system will have saved more than € 1,179,737 and thermal 8,780,005 kWh in a hotel 1 and € 1,315,104 and thermal 9,522,301 kWh in the hotel 2 for which it is expected to have saved more than € 1,100,000 and in the H1 hotel and more than € 1,300.00 in the H2 hotel.

## 5. Conclusions

The investment in the reduction of energy consumption is the way forward to maintain current quality and environmental standards, without reducing services to customers and without increasing operating expenses. It has been proven how the amortizations are very fast, and the savings produced can be reinvested in further modernizing other facilities or offering more services to customers. The investment in high efficiency systems and based on heat pumps leave the possibility to get water heating systems with zero emissions if they are made with joint supplies of photovoltaic solar panels, which would achieve autonomous systems without dependence on external energy. its operation. It is in the hands of the owners or operators of the hotel facilities, the mentalizing and making these improvements in their facilities, as well as in the institutions to legislate and inform about these technologies and their application to the current buildings, in search of the long-awaited building of energy almost zero (ZEB) or almost zero (nZEB).

## References


[1] Exceltur (2018). Tourism perspectives. Business tourism valuation of 2017 and prospects for 2018. No. 63, January 2018

[2] EU (2010), Directive 2010/31 / EU of the Parliament of Europe and the Council of May 19, 2010, relating to the energy efficiency of buildings. Official Journal of the EU, L 153, pp: 13-35.

[3] EU (2017), Energy. https://europa.eu/european-union/topics/energy_es

[4] Ecolabel EU. http://ec.europa.eu/environment/ecolabel/

[5] AITO Star. https://www.aito.com/

[6] Biosphere. https://www.biospheretourism.com/es

[7] Earthcheck. https://es.earthcheck.org/

[8] EMAS, EU. http://ec.europa.eu/environment/emas/index_en.htm

[9] Green Globe. https://greenglobe.com/

[10] UNE-EN-ISO 14001:2015. http://www.aenor.es/aenor/certificacion/mambiente/iso14001.asp

[11] UNE-EN-ISO 500001:2011. https://www.aenor.es/aenor/certificacion/mambiente/

[12] LEED. https://new.usgbc.org/leed

[13] Travelife. http://www.travelife.org/Hotels/Home.asp

[14] STEP. https://sustainabletravel.org/

[15] Ecolideres. https://www.tripadvisor.es/GreenLeaders

[16] Exceltur (2017). Impactur Canarias 2016. Study of the economic impact of tourism on the economy and employment of the Canary Islands.

[17] Leon Santana, J.S y Godenau, D. (2015). Tourism, migrations and labour markets in the Canary Islands. Atlántida Magazine, Volume 6, October 2015, pp. 69-99.

[18] ISTAC. http://www.gobiernodecanarias.org/istac/

[19] SIMAC (2016). Environmental information system of the Canary Islands. The Canary Network of Biosphere Reserves.

[20] Monzón-Alejandro, O.A. y Colmenar-Santos, A. (2016). Electrical Engineering Electronic Journal, volume 1, pp. 145-151.

[21] Shiming, D. y Burnett, J. (2002). Energy use and management in hotels in Hong Kong. International Journal of Hospitality Management, volume 21, issue 4, pp. 371–380.

[22] Moiá-Pol, A., Karagiorgas, M., Coll-Mayor, D. et al (2006). Evaluation of the Energy Consumption in Mediterranean islands Hotels: Case study: the Balearic Islands Hotels. Renewable Energy & Power Quality Journal, volume 1, pp 106-110.

[23] HES, (2011). Best practices guide – successful renewable energy technologies integration in SME hotels: Hotel Energy Solutions project publications.

[24] The Carbon Trust (2015). Hospitality, saving energy without compromising service.

[25] Karagiorgas, M., Tsoutsos, T. y Moiá-Pol, A. (2007). A simulation of the energy consumption monitoring in Mediterranean hotels: Application in Greece. Energy and Buildings, volume 39, issue 4, pp. 416-426.

[26] Díaz Perez, F.J., Chinarro, D., Guardiola, A., Díaz Martín, R. and Pino Otín, M.R. (2016). Modelling of Energy and Water Supplies in Hotels in Lanzarote and Fuerteventura with and Without Desalination Plant (SWROP). Indian Journal of Science and Technology. 2016, 9 (47), 1-19.

[27] Gössling, S. Tourism's contribution to global environmental change: space, energy, disease, and water, in Tourism, recreation, and climate change, eds. C.M. Hall & J.E.S. Higham, Channel View Books, Clevedon, 2005, 286-300.

[28] Rajagopalan Priyadarsini, Wu Xuchao, and Lee Siew Eang (2009). A study on energy performance of hotel buildings in Singapore. Energy and Buildings, Volume 41, Issue 12, pages 1319-1334.

[29] Jen Chun Wang (2012). A study on the energy performance of hotel buildings in Taiwan. Energy and Buildings, Volume 49, pages 268–275.

[30] Ifigenia Farrou, Maria Kolotroni, and Mat Santamorius (2012). A method for energy classification of hotels: A case-study of Greece. Energy and Buildings, Volume 55, pages: 553–562.

[31] AENOR (2005). UNE 94002:2005. Thermal solar systems for domestic hot water production. Calculation method for heat demand. Madrid.

[32] Díaz Martín, R., Sanglier Contresras, G. y Guardiola, A (2014). Mathematically simulated transportation of pellets and olive stones. J. Mater. Environ. Sci., volume 6, issue 5, pp. 1469-1479.

[33] Díaz Martín, R., Sanglier Contresras, G. y Guardiola, A (2015). Analysis of Production, Transport and Lifecycle of Pellets. American Journal of Environmental Protection, volume 4, issue 2, pp. 91-94.

[34] Díaz Martín, R., Sanglier Contresras, G. y Guardiola, A (2015). Footprint Score Evaluation Of Process And Transport Of Two Kinds Of Biomass Production. International Journal of Applied Engineering Research, volume 10, issue 13, pp. 33355-33360.

[35] Government of Spain, (2017). Basic document of energy saving HE with indicated modifications of Order FOM / 588/2017, of June 15, 2017.

[36] EU (2009), Directive 2009/28 / EC of the European Parliament and of the council of April 23, 2009, on the promotion of the use of energy from renewable sources and by which Directives 2001/77 / EC and 2003/30 are amended and repealed /EC.

[37] EU (2008), Regulation (EC) No 1099/2008 of the European Parliament and of the Council of 22 October 2008 on energy statistics (relevant text for the purposes of the EEA)

[38] IDAE, (2014). Average seasonal performances of heat pumps for heat production in buildings.

[39] Government of Spain. Royal Decree 314/2006 of 17 March, approving the Technical Building Code. BOE, 28 March 2006, 74, pp. 11816-11831.

[40] EU (200). Decision of the commission of March 1, 2013, which establishes the guidelines for the calculation by the Member States of renewable energy from heat pumps of different technologies, in accordance with the provisions of Article 5 of the Directive 2009/28 / EC of the European Parliament and of the Council

[41] Spanish Ministry of the Presidence (2003). Royal Decree 865/2003 of 4 July which established hygiene criteria for the prevention and control of Legionnaires' disease

**Table 4:** Expenses to annual savings and forecast during the useful life of the heat pump system

| H | TYPE | 2.010 | 2.011 | 2.012 | 2.013 | 2.014 | 2.015 | 2.016 | 2.017 | Forecast in 12 years |
|---|---|---|---|---|---|---|---|---|---|---|
| H1 | **Annual expenditure €** | 90.841 | 117.518 | 123.715 | 115.877 | 120.113 | 82.324 | 26.109 | 25.311 | **308.518** |
| | **Annual savings €** | | | | | | | 99.096 | 97.527 | **1.179.737** |
| | **Annual savings kWh** | | | | | | | 738.647 | 724.687 | **8.780.005** |
| H2 | **Annual expenditure** | 117.148 | 143.198 | 167.936 | 154.324 | 152.271 | 142.567 | 48.434 | 44.064 | **554.985** |
| | **Annual savings** | | | | | | | 107.342 | 111.842 | **1.315.104** |
| | **Annual savings kWh** | | | | | | | 793.194 | 793.857 | **9.522.301** |