International Journal of Engineering & Technology, 7 (3.31) (2017) 55-58

International Journal of Engineering & Technology

Website: www.sciencepubco.com/index.php/IJET

Research paper



Implementation of Fuzzy Logic Controller in Three Area Multi Source LFC System

B. Sriram Vivek[1], K. Swetha[1]*, D. Vijaya Kumar[2]

[1]*Department of Electrical and Electronics Engineering, SRKR Engineering College, Bhimavaram, Andhra Pradesh, India- 534204*
[2]*Department of Electrical and Electronics Engineering, AITAM College of Engineering, Tekkali, Andhra Pradesh, India – 532201*
**Corresponding author E-mail: swet07@gmail.com* Tel#: +91-9959572149

Abstract

The objective of this paper is to analyze power system with is interconnected with neighboring areas and having multisource power generation which is equipped with the fuzzy logic controller. Thermal, hydro and gas generating stations is used in each control area by considering real power environment. The proposed controller is tested with sudden step load disturbances. The dynamic response of LFC problem is studied by comparing with conventional controllers using MATLAB simulink software and found dynamic responses obtained satisfy the LFC requirement.

Keywords: *Load Frequency Control (LFC); Area Control Error (ACE); Fuzzy Logic Controller;*

1. Introduction

In general electrical power systems are interconnected to provide secure and reliable operation. For extensive level power systems with the restrictions in electrical power systems, LFC has great attraction due to large size and complexity with the increased connections [1 - 3]. Any deviation in frequency can directly impact power system reliability and system operation. LFC is an index of stability of power system; large deviations in power system cause an unstable condition in the power system.

LFC is one of the important control strategies for providing the reliable and controlled operation. Many researches are going on LFC to develop it for few years.LFC is used to regulate ACE error signal which accounts for errors in interconnected area frequency deviations or errors in tie line power of inter connected areas [4].

Many researches use single area thermal or hydro and two area thermal –thermal ,hydro-thermal[5]and many thermal stations have equipped with non reheat type turbines ,less concentration is shown towards the reheat type turbines, in today's modern world multi source with multi area has growing attraction with sources like thermal ,hydro ,gas ,nuclear ,solar ,wind etc.

Over the years many controllers have been produced to tune the PID parameters such as Ziegler and Nichols[6 - 10] brought two methods to tune the parameter values in instance without knowing actual model of the system, then Genetic algorithm a natural search process inspired by genetics has got the popularity ,Bacterial Foraging optimization algorithm inspired by food finding process of Bacterium cells[6], Particle swam optimization a stochastic search technique over the other methods, fuzzy logic controller is trending due its simplicity, reliability and effectiveness and being used in every field of industrial automation.

In this paper three area system consists of thermal, hydro and gas generating sources is shown in the **Figure 1** [1] for designing a better control, each area consist of mainly three components governor ,turbine and generator ,all the linearised models of the components are presented for simulation in fig1and its nomenclature is given in appendix [11–14]. Here in the thermal unit reheat turbine is presented for simulation.

2. Frequency Control Mechanism

In an interconnected system with multi area control, to maintain scheduled power interchange, the generation in each area has to be controlled. The change in load has an inverse relation with frequency, but the load changes continuously. Frequency control has three main control levels: primary control, load frequency control and economic dispatching control [12]. We utilize these control strategies to maintain system frequency output to a pre specified values.

Primary control is related to governor, it controls the steam valve That flows to a turbine, by controlling the steam valve we can control the generation rate. Governor reacts to the disturbances within the fraction of sec and stabilizes the frequency.

Load frequency control maintains the balance between the generation and demand and the system loses, if the load demand slightly increases then the operating point changes this leads to change in frequency. Load frequencies react to the disturbances and retrieve its frequency to normal position. Economic dispatch control refers to the temporary generation control at the lowest possible cost [4].To evaluate the area requirement the actual frequency and net inter change power flow are measured by the independent system operator (ISO).Area control error is a measure of balancing area's generating error.

Copyright © 2018 Authors. This is an open access article distributed under the Creative Commons Attribution License, which permits unrestricted use, distribution, and reproduction in any medium, provided the original work is properly cited.

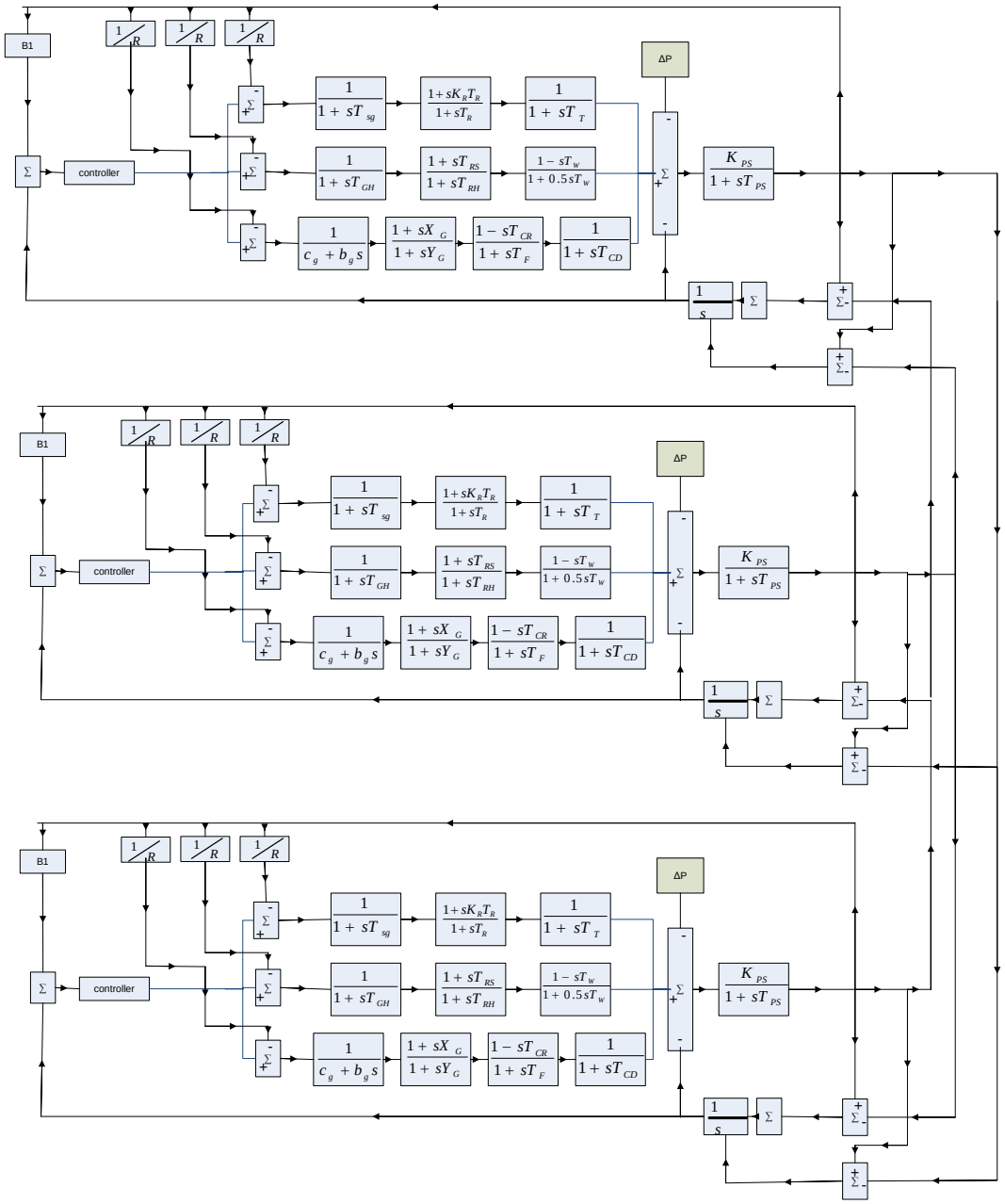

Fig. 1: Block diagram of three area LFC

$$ACE_i = B_i \Delta f_i + \Delta P_{tij} \quad (1)$$

To maintain system frequency and hold the system power at pre-defined values each generator is equipped with PI controller .the PI controller parameters are tuned with fuzzy logic controller and compared with Genetic algorithm.

$$K(s) = kp + Ki/s \quad (2)$$

$$X = AX + BU \quad (3)$$

$$Y = CX \quad (4)$$

3. Fuzzy Controller Design

Power system dynamic characteristics are complex and variable since load changes every time. Conventional controllers cannot control to the desired levels, in load frequency control problems, intelligent controllers can be used in place of conventional controllers to get good dynamic response.

LFC is more advantageous in solving large scale control problems compared to the conventional control problems which are slow
Fuzzy logic controller consist of three sections, they are

Fuzzification: it converts classical crisp set data into fuzzy set data
Fuzzy Interface Process: it combines membership functions with control rules to get the fuzzy output
Defuzzification: it converts fuzzy set data into classical crisp set data and put it in a look up table

Variable error in the system is frequency deviation, it is the difference between its normal and scheduled power system frequency. In this paper inputs of the fuzzy logic controller are area control error and derivativ e of area controller

Lingistic variables corresponing to input control system is given below, Where the membership function of the input is shown in **Figure 2**.

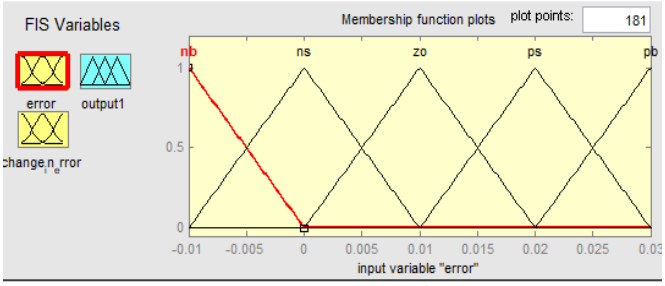

Fig. 2: Fuzzy input membership functions

Li[Ace,dAce]={nb,ns,zo,ps,pb} (5)

Linguistic variables corresponding to output control system is given below, the membership function of the output is shown in fig.3

Lo [Ace, dAce] ={s, m, b, vb, vvb} (6)

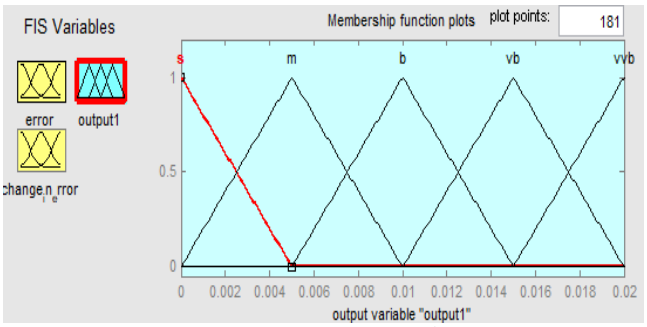

Fig. 3: Fuzzy output membership functions

Here error and change in error are the inputs of LFC and five membership function are used they are negative big(bn),negative small(sn),zero(zo),positivebig(bp),positivesmall(sp),small(sm),medium(me),big(bg),very big(vbg),very very big(vvbg).fuzzy rules are shown in **Table.1.**

Table 1:. Fuzzy rule base

Error	Change in error					
		bn	sn	Zo	sp	bp
	bn	sm	sm	me	me	bg
	sn	sm	me	me	bg	bg
	Zo	me	me	bg	Vb	Vb
	sp	me	bg	Vbg	Vbg	Vvbg
	bp	bg	Vbg	Vbg	Vvbg	Vvbg

4. Simulation Results

Detailed in this paper, three area nine unit models is used, it is shown in **Figure 1**. this system consists of three control units each individual unit consist of three generating units that are powered by different genco's. LFC inputs are given to governors of each unit. This three area nine unit examined for step load deviation (0.1pu) in area 1, (0.05pu) in area 2, (0.05pu) in area 3. The frequency fluctuations in area 1 is shown in **Figure 4**,frequency fluctuations in area 2 is shown in **Figure 5** and frequency fluctuations in area 3 is shown in **Figure 6. Table 2** represents the comparison of parameters corresponds to the **Figure 4-6**. On observation of these figures we can say that our proposed method is effective, settling time, rise time and other transients are reduced to great extent and proves that our proposed controller can be applied to solve real world problems.

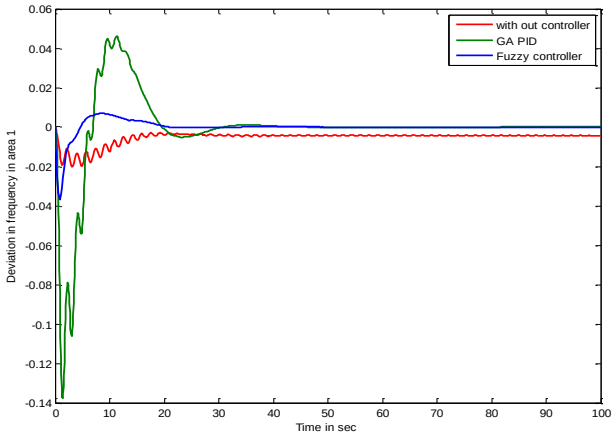

Fig. 4: Deviation in frequency in area 1

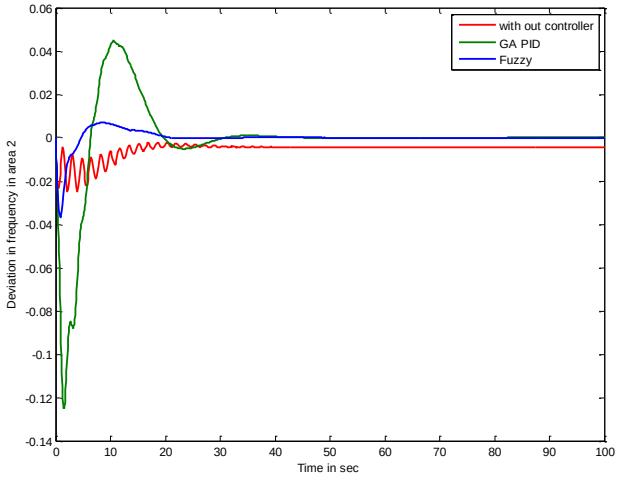

Fig. 5: Deviation in frequency in area 2

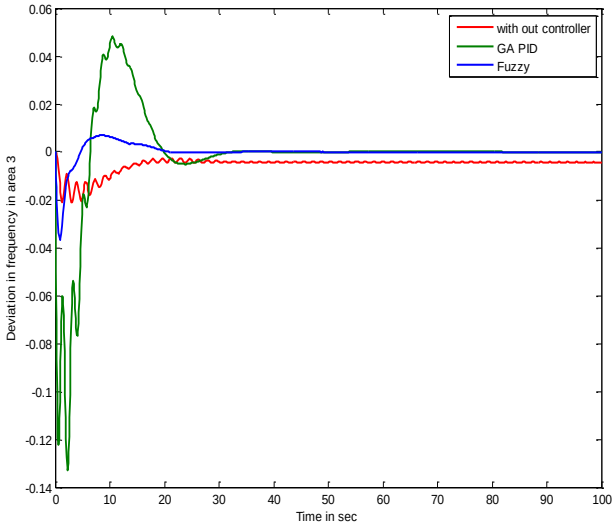

Fig. 6: Deviation in frequency in area 3

Table 2: Comparison of parameters

Tuning PID controller Techniques		**Without controller**	**GA PID**	**Fuzzy controller**
Frequency in area 1	**Setting time [sec]**	/	39	22
	Max Deviation [Hz]	-0.02	-0.14	-0.035
Frequency	**Settling**	50	40	21

in area 2	**time [sec]**			
	Max Deviation [Hz]	-0.023	-0.129	-0.038
Frequency in area 3	**Settling time [sec]**	90	37	23
	Max Deviation [Hz]	-0.02	-0.13	-0.039

4. Conclusion

In this fuzzy tuned LFC is used for three area system, Implementation of fuzzy logic controller gives an improved result. Simulation studies clearly states that the proposed control strategy is effective for different load conditions. The system performance is observed that is settling time, rise time, peak over shoot, undershoot and found that our proposed controller is good enough to suppress the transients and bring the system frequency to the constant value.

References

[1] Parmar K.P.S, Majhi S., Kothari D. P, Load frequency control of a realistic power system with multi-source power generation. Int J Electr Power Energy Syst., 42 (2012), 426–33.

[2] Kothari D.P., Nagrath I.J., Modern power system analysis. 4th ed, New Delhi: Tata McGraw Hill, (2011).

[3] Kothari D. P., Dhillon J. S. Power system optimization. 2nd ed. New Delhi: Prentice Hall, (2010).

[4] Kundur P., Power system stability and control. McGraw-Hill, (1994).

[5] H. Bevrani "Robust Power System Frequency Control" 1st Ed.,. 2nd Printing, Springer, (2009).

[6] Ibraheem, Kumar P., Kothari D.P., Recent philosophies of automatic generation control strategies in power systems. IEEE Trans. Power. Syst., 20, 1, (2005), 346–57.

[7] Abraham R.J., Das D., Patra A., "Damping oscillations in tie power and area frequencies in a thermal power system with SMES-TCPS combination" J. Electr. Syst. 7, (2011), 71–80.

[8] Muthana T. A., Mohamed F. H., "Mohamed Z. Decentralized load frequency controller for a multi-area interconnected power system", Int. J. Electr. Power Energy Sys., 33, (2011), 198–209.

[9] Ali E. S., Abd-Elazim S. M., "BFOA based design of PID controller for two areas Load Frequency Control with nonlinearities", International journal of Electrical Power & Energy systems, 51, (2013), 224-231.

[10] Sudha K. R., Santhi R. V., "Robust decentralized load frequency control of Interconnected power system with generation rate constraint using type-2 Fuzzy approach"., Int J Electr Power Energy Syst., 33, (2011), 699–707.

[11] Parmar K. P. S., Majhi S., Kothari D.P., "Automatic generation control of an interconnected hydrothermal power system", IEEE conference on Proceedings, INDICON, Kolkata, India, (2010).

[12] Saikia L.C., Nanda J., Mishra S., "Performance comparison of several classical controllers in AGC for multi-area interconnected thermal system", Int. J. Electr. Power Energy Syst., 33, (2011), 394–401.

[13] Yazdizadeh A., Ramezani M.H., Hamedrahmat E., "Decentralized load frequency control using a new robust optimal MISO PID controller", Int. J. Electr. Power Energy Syst., 35, (2012), 57–65.

[14] Chandrakala K.R.M.V., Balamurugan S., Sankaranarayanan K., " Variable structure fuzzy gain scheduling based load frequency controller for multi-source multiarea hydro thermal system", Int .J. Electr. Power Energy Syst., 53,(2013), 375–81.