International Journal of Engineering &Technology, 7 (3.12) (2018) 1273-1277

International Journal of Engineering & Technology

Website: www.sciencepubco.com/index.php/IJET

Research paper



Efficient Energy Management and Grid Interconnection of Solar PV System

Shivinder Mehta[1*], Farhad Ilahi Bakhsh[2], Neetan Sharma[3]

Department of Electrical & Renewable Energy Engineering, SoET, Baba Ghulam Shah Badshah University, Rajouri, J & K India
**Corresponding author E-mail: [1]shivinder.mehta@gmail.com*

Abstract

With the increasing concerns on environment and increasing emission of greenhouse gases, we need to reduce the energy required to provide necessary products and services essential for ease of living by implementing efficient use of energy. Also we need to shift towards more clean and green forms of energy. Sun is the ultimate source of energy and its energy reaching at Earth's surface is about 10000 times greater than what we are consuming presently. Solar and wind remains in the top list of clean and green energy.
Solar energy harnessed by Multifunctional photovoltaic converters (MPVC) are getting popular now a day as, it combines the advantages of inverters connected to the network (grid-tie inverter) and off-grid type inverter, as well as Uninterruptable Power Supplies (UPS). Grid tie inverter simply feeds the excess power generated to the grid with full utilization of solar panels.

Keywords: *Multifunctional photovoltaic converters (MPVC); Uninterruptable Power Supplies (UPS); International Energy Agency (IEA); Building Management System (BMS); Photovoltaic (PV).*

1. Introduction

1.1. Efficient Energy Use

Sun is the ultimate source of energy and its energy reaching at Earth's surface is about 10000 times greater than what we are consuming presently[2].Increasing demand for electrical energy is enough to motivate for improvement of electrical efficiency. Reducing use of energy reduces energy costs and also results in a financial benefit of cost saving for the consumers, if there is any additional cost of implementation of energy efficient technology, same is compensated by the savings made. Reduction in usage of electrical energy or use of energy efficient machines is also seen as a way-out of reducing emission of greenhouse gases. According to the (IEA) International Energy Agency, the use of energy efficient techniques in the industrial building will reduce the overall emission of the gases responsible for greenhouse effect and will reduce the need of world's energy by 33 % approximately.
Energy efficient use and use of renewable energy are the two main pillars of continual development. Efficient use of energy is all about managing the resources in the best possible way without compromising with the comforts and ease of living. It is mainly possible by the expert auditing of the existing system from time to time and removing the areas where energy is being wasted. Also the per capita energy consumption (average energy consumed per person), which is considered one of the indicators toward the ease of life being lived by the people of that country or area is being controlled by most of the developed nations and now they are working toward the reduction of their per capita energy consumption by implementing the efficient use of energy. Although the per capita energy consumption of India is very low but still we can try to control the wastage of energy.

1.2. Building Management

Energy efficient Building has a remarkable "Quality" of managing its energy requirement and the energy consumption. In other words, we can say it consumes changes and originate energy when required allowing us to minimize our total energy consumption and carbon footprint without compromising comfort, ease and safety. Energy efficient Building is a home or an office building or a complex with better utilized environmental and economic work performance. The building accomplishes this by the usage of electrical energy when required.
Wastage of energy can be removed by obtaining information about all the process and the practices, while ensuring safety, security, controlling air conditioning, lighting and visually showing the consumption of electrical energy. Energy measurement is also necessary to ensure the security of the building. Buildings that make building management in a better way helps curbing energy consumption, from the building level to an individual level - those buildings are called as Energy efficient Buildings.
By building a two way energy flows between an on-site electricity generation, storage systems and the outside electrical grid, Energy efficient building can handle energy and demand to help remove energy waste also reduces the greenhouse gas emissions. Energy management will take place much more fruitful way through the enhanced use of resources, renewable energy generation assets like wind, bio-gas and solar photovoltaic, solar water heating, energy efficient machines and lightning equipments.

Copyright © 2018 Authors. This is an open access article distributed under the Creative Commons Attribution License, which permits unrestricted use, distribution, and reproduction in any medium, provided the original work is properly cited.

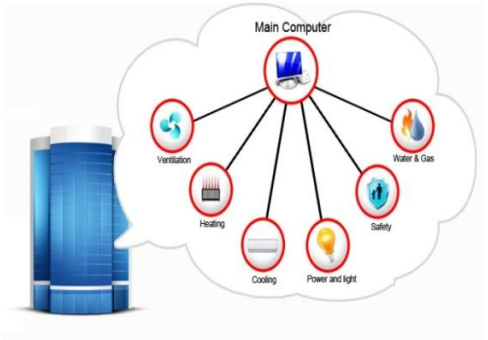

Fig. 1: Block Diagram of the Building Management System

Building Management System (BMS) is an integral part of Energy efficient building. This is installed inside a building to maintain and control the electrical energy equipment, Chillers, fire alarms and security systems. BMS is comprised of following tools. Electrical energy meters, controller units, sensors, PLC's and control software.

Buildings that make building management in a better way helps curbing energy consumption, from the building level to an individual level - those buildings are called as Energy efficient Buildings.

In other words, we can say efficient building consumes less and originate energy when required allowing us to minimize our total energy consumption and carbon footprint without compromising comfort, ease and safety. Energy efficient Building is a home or an office building or a complex with better utilized environmental and economic work performance. The building accomplishes this by the usage of electrical energy when required.

2. Grid Tie Inverter

A grid tie inverter is a special type of inverter, which is normally used to connected solar PV system, wind generation unit or any other renewable energy generating unit to the supply gird. It firstly converts the DC power generated into AC power, which is in phase and in synchronism with the power available in the grid. As we know we wish to install a grid tie inverter, where at times we are generating more energy than required at that point of time. Also we want to run the entire load of the system plant or a building on a solar PV system the excess energy, which we are getting from the Solar PV cells, may be fed to the grid station through Grid interconnection so as to reduce the monthly electricity bill. We mainly required four things to complete the grid interconnection:

1. Solar panel
2. Grid tie inverter
3. Net metering device
4. Power distribution system.

Firstly we need to connect the Solar Panel output wires to the junction box and then the wires of the junction box are to be connected to the grid tie inverter, then the supply wires from the Grid tie inverter are connected to are to be connected to the net metering device. Load is given a connection through net metering device and finally the wires from the net metering device are to be connected to the grid supply. For instance if the solar PV panel is generating a power of 1000W and the power requirement of the load is only about 500W, then firstly it will feed 500 W to the load and the remaining 500W to the grid through net metering. The total cost of grid interconnection is about 7% of the total PV panels cost [5].

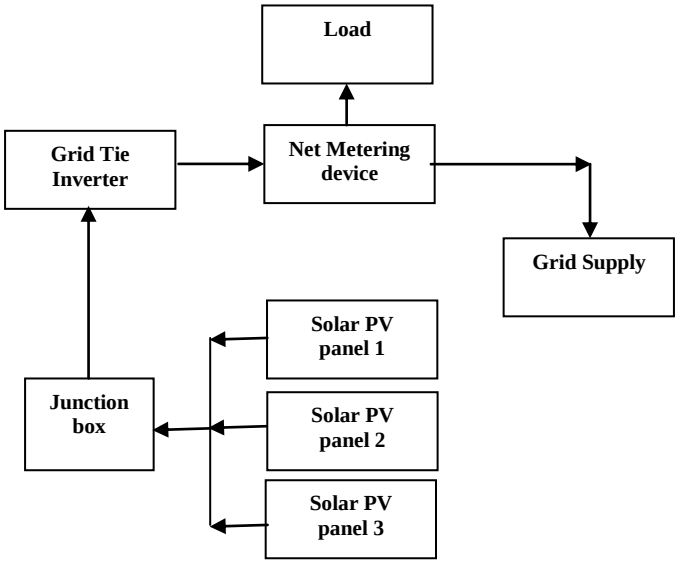

Fig.2: Block diagram of grid tie inverter

2.1. Classifications of Grid Tie Inverter

Normal photovoltaic inverters may be classified into:

a) Grid Tie Inverter

In a grid tie inverter power flows only from the solar photovoltaic panels to the grid. During the event of fault or failures in the grid the Solar PV system is also isolated in order to save the lives of the workers, who may be working for the repairing of the grid. Now during the event of failure, load is neither getting power from the main grade nor from the Solar PV panels.

b) Off Grid Inverters

In an off grid inverter, normally an array of batteries are to be installed, which are being charged only by the photovoltaic panels during sunshine and the same charge batteries are being used to feed the load, whenever required.

In this type of scheme, the main disadvantage is that, when the battery bank is fully charged, there is no means and ways in place, which can use the energy after the fully charged battery. Also the cost of replacement of batteries is very high as the battery system has the shelf life of about 3 to 5 years, whereas the life of solar photovoltaic panels is about 25 to 30 years.

2.2. Various Other Types of Grid Connected Inverter

There are many more ways a grid connected inverter can be classified as from the impedance point of view they may be classified as:

a) Voltage source inverter (buck type).

Voltage source inverter are further divided into three categories
a. Two level inverter
b. Interleaved inverter and
c. Multilevel inverter
Multilevel inverter is divided into 4 categories:
a. Neutral-point-clamped NPC
b. Flying capacitor FC
c. Cascade h-bridge
d. Modular level

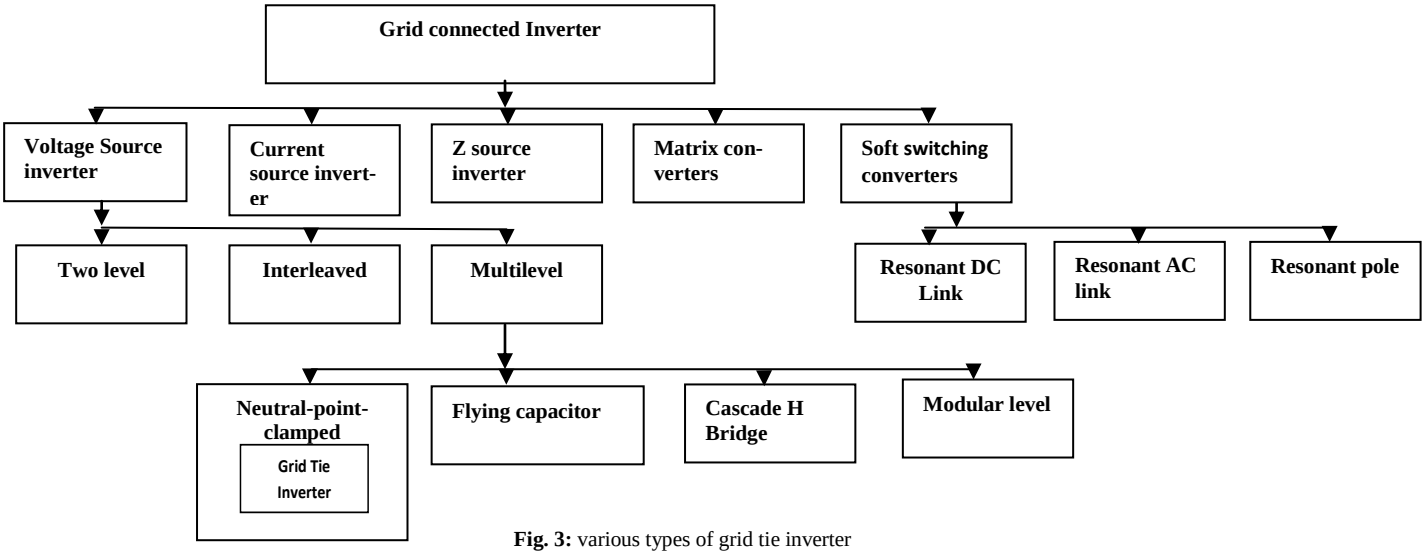

Fig. 3: various types of grid tie inverter

b) Current source inverter (boost type).
c) Z source inverter (buck-boost type)
d) Matrix converters and
e) Soft switching converters
a. Resonant DC link.
b. Resonant AC link.
c. Resonant pole.

2.3 Popular Multi-Level Topologies

As the number of switches increases in multilevel inverter the voltage rating of the individuals which goes on decreasing hence the device becomes cheaper and the efficiency of the system also increases also the harmonic distortion in the system decreases but the complexity in the system increases with the increase in number of levels[6]. Popular multilevel technologies are shown in figure 4-7:
a. Neutral-point-clamped NPC (figure 4).
b. Flying capacitor FC (figure 5).
c. Cascade h-bridge (figure 6).
d. Modular level (figure 7).

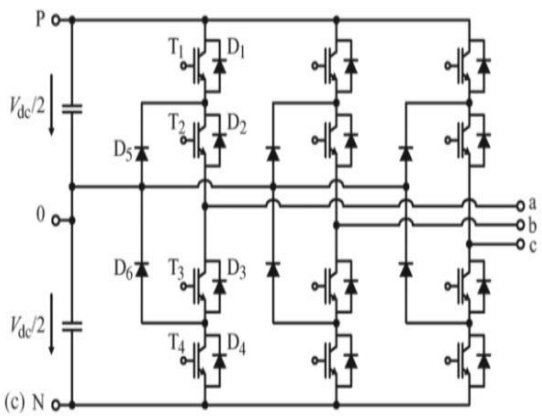

Fig. 4: Neutral-point-clamped NPC [6]

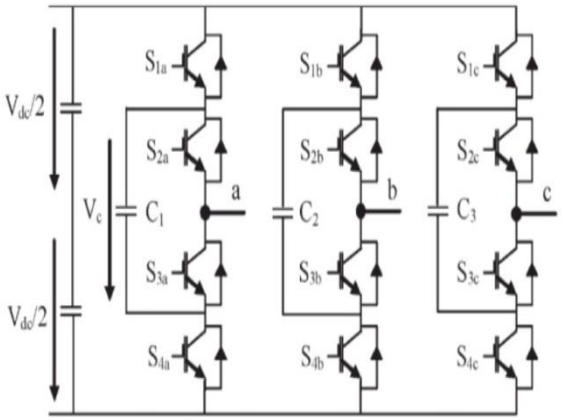

Fig.5: Flying capacitor FC [6]

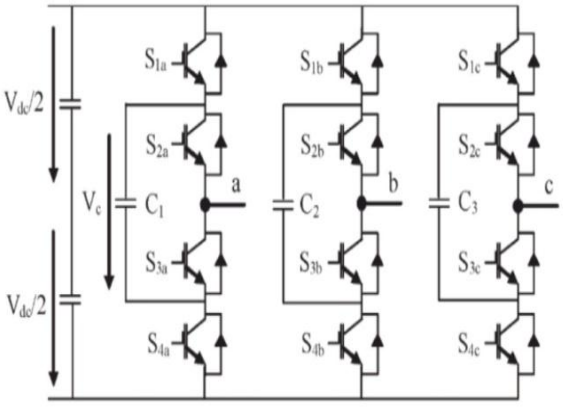

Fig. 6: Cascade h-bridge [6]

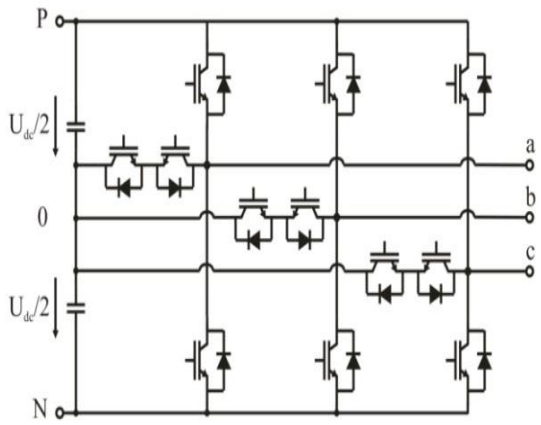

Fig. 7: Modular level [6]

2.4 Multifunctional Photovoltaic Converters

Multifunctional photovoltaic converters (MPCV) must be installed in order to combine the advantages of both grid Tie and off grid inverter [3] and MPCV we may be operated in following mention modes:

1. **Grid feeding mode**: During Grid feeding mode the Solar PV system is working as a normal grid tie inverter with the power being fed directly to the grid, some amount of power which is required to run the self load is consumed by the consumer and the excess power is being fed to the grid. Net metering system is placed in-between, which takes an account of the power being fed to the grid at different times and accordingly the monetary benefits may be given to the user in terms of Bill reduction.
2. **Grid sinking mode:** During Grid Sinking mode there is a flow of current from the main supply lines to the battery bank. It helps in recharging of batteries in the event of low sun shine or bad weather for many days**.**
3. **Grid forming mode:** During grade forming mode in grid forming mode the grid tie inverter creates an internal grade to feed the critical loads even in the event of failure in the main supply line due to all the operating modes MPVC are becoming more and more popular nowadays

3. Solar Cell Technology

Solar cell is an optical device which converts light and heat from sunlight into electrical energy Photoelectric effect was firstly studied in 1839 by French scientist Alexander-Edmond Becquerel, but the first solar cell was built in the year 1883 by Charles Fritts, who made it with selenium as a base and a very thin layer of gold which had an efficiency of only 1%. Since then tremendous research is going in the field of in the field to increase the efficiency of a solar cell. The maximum possible efficiency of a solar cell is about 25 to 29% in ideal conditions also we are working of increasing efficiency with smaller size solar cells so as to reduce the cost of area involved in erection of solar PV panels and to get output higher by installing these panels even on rooftops.

3.1 Solar Cell Working Principle

Working a solar cell is basically a normal PN junction diode manufactured to optimize the flow of electrons by the energy of Sunlight falling on surface. it mainly consists of a P-type Silicon wafer about 300 micrometer thickness over which a thin layer of N-type material of about 0.3 micrometer thickness is placed the upper layer is made thin, so that the sunlight from the upper layer should reach the PN junction made between the two layers.

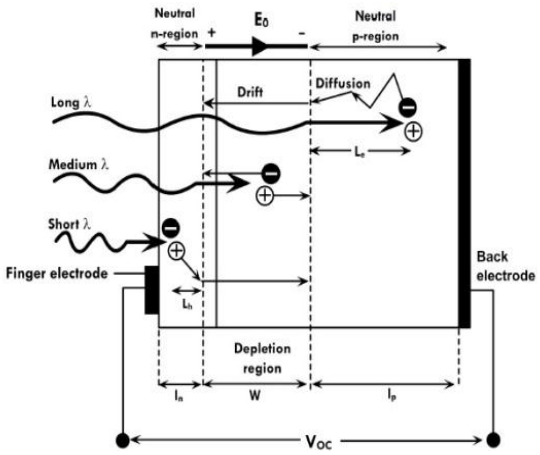

Fig. 8: Working a solar cell

Electron hole pair generated by the sunlight is being collected by the thin finger electrodes (silver metal is used & it covers about 15% of the area) place on the top of the N- layer and charge carriers collected at the finger electrodes, find less resistance in the path through external wire and load so negative charge flows from the top N- layer to the bottom P- layer constituting an electric current which flows in opposite direction from the bottom P- layer to the top N- layer.

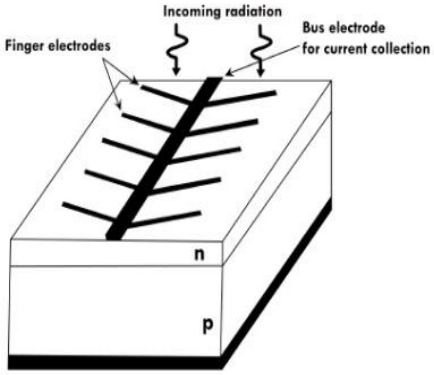

Fig. 9: Thin finger electrodes

3.2 Solar Cell Materials and Efficiency

The material which we normally use to make a solar cell must have an energy gap less than the energy of a photon otherwise; the photon from the sunlight won't be able to make those electrons jump from valance band to conduction band. Firstly we need to check the energy of the photons, which we are getting from sun. Normally sun rays have photons of different energy levels and most of them lie between an energy level of 1.5 ev to 1.6 ev. Silicon is the best choice in semiconductors to fetch solar energy. As it is available in abundance, non-toxic, stable and the energy gap lies in the range of energy of photons as well.

With the recent advancement in nanotechnology and plastics conducting current, for which professor Alan Heeger was awarded Nobel Prize in the year 1977. Scientist have created a plastic solar cell which is capable of converting sunlight into electricity even cloudy days, as it is able to using infrared region of the sunlight as well. Plastic solar cells are safe, thin, flexible and cost-effective. Also with the combination of special nano particles called Quantum dots we can reach efficiency up to 30%

4. Comparison

It has been suggested to use a grid tie inverter working with different modes, so that the short comings of both the off grid type and grid type alone can be reduced.

As in off grid type inverter, we are using a battery bank, which is very costly and after the full recharging of batteries the excess power is of no use hence same is getting wasted, even the batteries are being underutilized.
In Grid connected type, the high cost of batteries is eliminated but during the event of fault in the grid, the solar PV supply is also shut down (as a safety measure), which is again not getting used properly.
But the technique suggested in this paper has a better utilization of solar energy as

a. It controls the amount of charging to be given to the battery system, so that the batteries may not get over charged.
b. The solar PV supply for charging during the peak load hours is also prevented by proper programming.
c. In event of low sun light or clouds for days together the battery system may get charging from the grid and may not remain under utilized.
d. It ensures the power in the battery bank most of the times.
e. It ensures the power to the critical standalone loads.

5. Challenges

There are certain challenges with the increasing solar PV grid interconnection:

1. The grid must be capable to handle the increase in power as there is a rapid growth in solar and wind Grid connected systems
2. The output voltage and frequency must be in synchronism with the supply lines and more efficient systems may be installed to correct any mismatch.
3. Accurate forecast about the solar power is not available.
4. Capital expenditure much more as compared to conventional sources.
5. Rising land costs and developmental issues.
6. Complexity of subsidy structure and involvement of too many agencies such as MNRE, IREDA, SERCs etc.

6. Conclusion

Solar PV energy is increasing on a rapid pace and there has been a remarkable growth in electrical energy generation through solar PV panels and other renewable resources in last 8-10 years. This paper gives an insight of efficient use of energy. That it's better to control our consumption then to generate more and more power, also the developed countries are working toward the reduction of their per capita energy consumption. Importance of Multifunctional photovoltaic converters (MPCV), as it combines the advantages of both grid Tie and off grid inverter. Multifunctional grid interconnection in different modes is more beneficial than a standard grid tie or off grid functioning.

References

[1] Shraddha R J, Channappa B ,"A Review Paper on Infrared Plastic Solar Cell", Impending Power Demand and Innovative Energy Paths, ISBN: 978-93-83083-84-, (2015).pp. 333-340, available online: http://www.krishisanskriti.org/vol_image/10Sep201511091048.pdf

[2] Qian H, Zhang J, Lai JS, YuW, "A High-Efficiency Grid-Tie Battery Energy, IEEE Transactions on Power Electronics, VOL. 26, NO. 3, MARCH 2011, pp 886-896.

[3] Bortolini R J F., Michels L, Belinaso L V,Massing J R, "Compatibilizing multifunctional photovoltaic converters with Brazilian standards: analysis and discussion", 978-1-5090-6248-5/17/$31.00 (2017), IEEE, available online: https://ieeexplore.ieee.org/document/8257422/

[4] Bagher AM, Vahid MMA, Mohsen M, "Types of Solar Cells and Application",American Journal of Optics and Photonics. Vol. 3, No. 5, 2015, pp. 94-113. doi: 10.11648/j.ajop.20150305.17, available online: http://dx.doi.org/10.11648/j.ajop.20150305.17

[5] Yadav A, and Kumar P, "Enhancement in Efficiency of PV Cell through P&O Algorithm". International Journal for Technological Research in Engineering, (2015)pp. 2642-2644. available online: http://www.ijtre.com/images/scripts/2015021137.pdf

[6] Choi W, Wu Y, Han D, Gorman J, Palavicino, P C, Lee W, Sarlioglu B,"Reviews on Grid-Connected Inverter, Utility-Scaled, Battery Energy Storage System, and Vehicle-to-GridApplication – Challenges and Opportunities" 978-1-5090-3953-1/$31.00 (2017), pp. 203-210, https://ieeexplore.ieee.org/document/7993272/

[7] Athari H, Niroomand M, Ataei M, "Review and Classification of Control Systems in Grid-tied Inverters", Renewable and Sustainable Energy Reviews, (2016), available online: http://dx.doi.org/10.1016/j.rser.2016.10.030

[8] Hasan R, Mekhilef S, Seyedmahmoudian M, Horan B, "Grid-connected isolated PV microinverters: A review", Renewable and Sustainable Energy Reviews, (2015) , pp. 1065-1080, available online: http://dx.doi.org/10.1016/j.rser.2016.09.082

[9] Mirhassani S M, Ong H C, Chong W.T., Leong K.Y, "Advances and challenges in grid tied photovoltaic systems", Renewable and Sustainable Energy Reviews, (2014), pp. 121-131, available online: http://dx.doi.org/10.1016/j.rser.2015.04.064

[10] Shivani S S ; Alfreda J. D ; Deepa S ; Kumar G S, "A study on increasing the efficiency of the solar cell using nano metals", Electrical Energy Systems (ICEES), (2016), pp. 228-231, https://ieeexplore.ieee.org/document/7510645/