International Journal of Engineering &Technology, 7 (3.12) (2018) 1248 -1253

International Journal of Engineering & Technology

Website: www.sciencepubco.com/index.php/IJET

Research paper

Controller Design for Energy Scheduling in Wireless Sensor Network Device Modeling

Sampath Kumar Pattem[1*], Jayasankar K[2], Sumalatha V[3]

[1]Research scholar, Department of ECE, Malla Reddy Institute of Technology, Hyderabad, AP, India
[2]Professor & Head, Department of ECE, Vasavi College of Engineering, Hyderabad, AP, India
[3]Professor, Department of ECE, JNTU college of Engineering, Anantapur, AP, India
**Corresponding Author Email: [1]samphd2011@gmail.com*

Abstract

Wireless sensor network is upcoming in the stream of wireless network. System design for node scheduled of wireless device. In device designing, the nodes are used for the transmission, the device with a coding approach for power planning in wireless network. The approach of power organizing is done by the thought of system topology and hub control level. Rather than the regular power organizing approach where in planning of power is completed considering detached hubs. In this paper the hub dispersion and system engineering is considered and in worry to the neighbouring hub trademark and power planning is done. This method of correspondence is seen to be more proficient in correspondence than the regular level topology approach, which takes after a disjoint based wake up organizing plan.

Keywords: *Communication protocol; controller design; Device Modeling; energy scheduling; wireless sensor network*..

1. Introduction

Wireless sensor network is the new advancing methodology for checking and trading information in different constant observing framework. In the approach of information correspondence, parcels are traded with each other considering the system model and hubs display in the trading of information bundles. In the approach of information correspondence in such system, sensor units are conveyed at different areas in the system, and they constantly measure the physical parameters, Example humidity, pressure, temperature, moisture and weights etc., to control the performance of the unit under consideration. Since WSN are wireless networks no physical wiring is required and sensors can be placed any where effortlessly. Such systems have less support, practical, and effectively deployable in contrast with its partners. Wireless Sensor Networks (WSNs) speak to another model in remote innovation drawing critical research enthusiasm from various fields of building. WSNs can be conveyed widely in the physical world and spread all through our condition. They can be sited a long way from the genuine event can in any case be utilized for information accumulation and gathering from a remote area far from the marvel. WSNs offer restrictive advantages and versatility regarding low-power and low-cost situating for some applications that needn't bother with human supervision. A portion of these applications incorporate disaster recovery, military observation, health organization, environmental& living space checking, target-following and so forth. The WSN sensors have various constraints like transmission capacity, transmission power and power constraints also the topology of the system and repetition of information. The sensors in the WSN additionally having constrained assets like restricted transmission capacity, constrained power, capricious system topology and information repetition.

The principle target of any directing convention is to diminish vitality utilization and needs to expand the throughput. This versatile conduct, enables system to be immediately framed even under the most unfriendly conditions. An essential issue in the outline of remote systems is the amazingly constrained vitality supply of the hubs. Albeit different techniques for vitality preserving conventions have been produced for wireless [1-4], the limited issue stays one of awesome centrality. The restricted vitality limit of cell phones has conveyed vitality preservation to the cutting edge of worries for empowering versatile correspondences. As the energy resource is battery driven it, is to be conserved to the maximum to achieve higher network life spam. In conservation of energy resource in Adhoc network various energy conservation approaches [5-7] were proposed in past. Among these all approaches a communication scheduling approach is observed optimal, as the controlling is operational controlled, hence giving lower demand for device changing. In the area of scheduling based communication, controlling of device switching, enabling, buffering [8-10] or routing [7] based controlling were proposed. However, the scheduling based coding primarily demands for data precision, as in most scenario it is observed that while scheduling of energy resources data are transferred via different nodes and the probability of data lost, or data fragmentation increases [11]. Hence, for a scheduling based coding, it is required that with the energy conservation data precision should also be maintained. The restricted vitality limit of versatile figuring gadgets has conveyed vitality preservation to the cutting edge of worries for empowering portable interchanges. This is a specific worry for remote sensor systems where gadgets are relied upon to be sent for significant lots of time restricted potential reviving batteries. Desires request preservation vitality in all parts of the cell phone to help changes in gadget lifetime [12,13].

To help vitality effective correspondence in wireless sensor systems, it is important to consider vitality utilization at different layers in the system convention stack. At the system layer, shrewd

Copyright © 2018 Authors. This is an open access article distributed under the Creative Commons Attribution License, which permits unrestricted use, distribution, and reproduction in any medium, provided the original work is properly cited.

directing conventions can limit overhead and guarantee the utilization of least vitality courses [14]. At the medium access control (MAC) layer, procedures can be utilized to decrease the vitality devoured amid information transmission and gathering [15]. Moreover, a keen MAC convention can kill the remote specialized gadget when the hub is sit still [16]. A nitty gritty systematic investigation of the vitality proficiency of numerous MAC-layer conventions, including IEEE 802.11, is introduced in [17-19]. A novel node Architecture for industry Design is proposed in [20].

2. Wireless Sensor Network Interface

Optimize power utilization of wireless sensor network during data exchange, retaining the node life time, and quality of the data preserved, a power-interference modeling for WSN is suggested. The application of WSN is used in field usage, to measure the physical data for remote monitoring, while transmitting of data it is required to have higher rate of transmission as well preserving the accuracy of data measured, data rate accuracy, as the sensor data are more open to wireless medium, interference is observed. Wherein most of the optimization work is focused on the approach of network life time improvement, less focus is made towards the offered quality of service in the data propagation. The leach routing protocol is used, where a cluster head is randomly been chosen for a time interval based on the available power limits. The scheme is a developed with the objective of scheduling the cluster head in the view of received signal energy. Though the approach is a focused on preserving the quality of service based on received signal strength, No method was suggested for the retention of preserving the data quality or power conservation scheme. In all the past developments, the network is divided in to sub clusters and a head is selected based on the range coverage and power availability. Such networks are communicated via gateways. Here the member nodes are scheduled for power conservation by scheduling the operation period into Sleep and wake up periods, and network life time is increased by the improvement in power conservation based on scheduling. In other approaches, multi cluster head coding was suggested, where different cluster heads are scheduled for switching of data based on power constraint in each node. In all these past approach the basic constraint is the power. All these approaches were developed with the focus to improve life time only, and the route reliability is totally evaluated wrt. the route with higher lifetime. However, the route lifetime could lead to higher data delivery rate or higher throughput, but the quality offered to the data content is also a prime requirement. Quality oriented routings were also developed in past, where routes are selected based on the offered bandwidth. However, the bandwidth based coding is dependent only on route property, and no network information is used. In such case the routes offering higher bandwidth will lead to higher traffic flow, but the inference encountered at the channel is not observed. The higher throughput achieved is to be updated with higher accuracy as well.

To achieve this objective of higher throughput, longer network life time and higher quality of data received, a new scheduling and routing approach is focused. The process is suggested as;

1) For the given network a cluster formation will be made based on range constraint.
2) For the developed clusters, then a routing module will be defined via intermediate head and gateways.
3) The cluster will be scheduled for communication based on the energy level in the network.
4) To this developed approach, power scheduling approach of wakeup and sleep process will be defined, to save node powers.
5) This implementation will realize the conventional model of cluster based coding for data communication.
6) To this developed architecture, a new scheduling approach of link forwarding will be defined in consideration to demanded level of service.
7) During the propagation, the head and gateway nodes will define a interference monitoring value which will be updated based on the received signal strength per exchange.
8) The data will now be forwarded based on two factors of power and interference model as compared to only power model in conventional system.
9) This approach will leads to higher throughput with accuracy in sensor network, which are the prime requirement of a sensor network.

3. WSN Device Modelling

Customary displaying of WSN hub CSMA/CA engineering was utilized to build up a hub demonstrating for WSN hub task. The hub operational design is as displayed in figure 1.

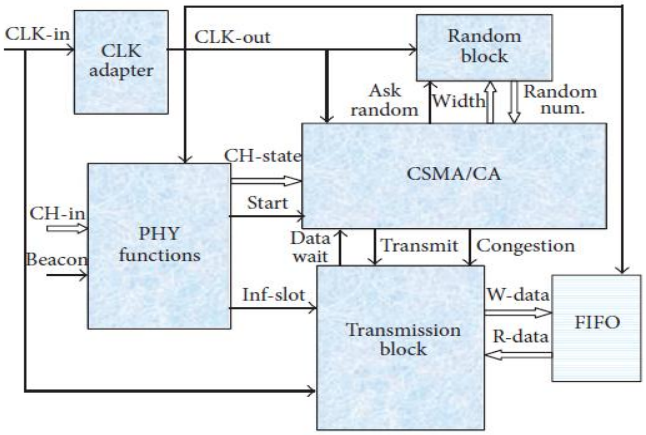

Fig.1: Operational Architecture for the proposed CSMA/CA mechanism

As the CSMA/CA units control the concede factor by the status of line length, blockage probability is restricted. Regardless, it is watched that is such arrangement the controlling is presented at a later stage, which prompts higher blockage at the help. It is in like manner watched that the strategy of transmission is interfaced to a FIFO unit, wherein no controlling of data trading is made, which prompts overall synchronization issue in WSN. To achieve the objective of synchronous undertaking a probabilistic controlling procedure with development organization is proposed. The gear level importance of the suggested approach was made using VHDL coding. The proposing designing for center point arrangement is appeared in figure 2.

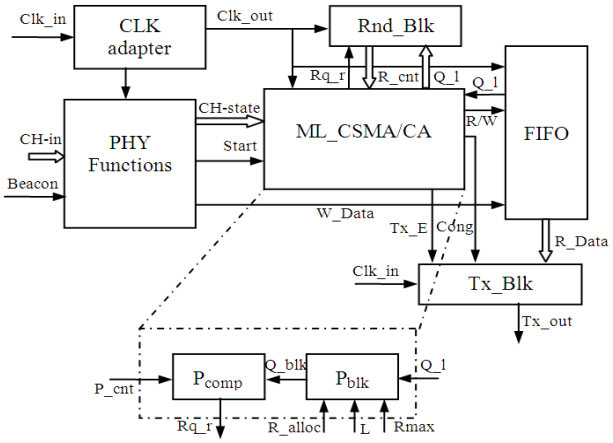

Fig. 2: Proposed System Architecture

The implemented technique is created with the target of controlling the movement stream in the hub level to maintain a strategic distance from any caught blockage been worked amid information spilling over the hub. The clog prompts organize blockage also

high-power dispersal because of flagging solicitation and information buffering. At the point when the Listen counter wi is expanded after each Wakeup cycle (Tm,Tm+1) in interface period Capital(T), tune in up time of all center points are redistributed in the era (Tm,Tm+1) and every single Active hub get decent amount of throughput.

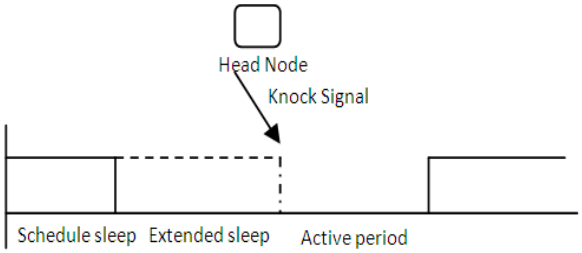

Fig. 3: Proposed Power scheduling approach

In WSN, movement going through the spine hubs, i.e., Active_Link and Link hubs is relied upon to be huge when contrasted with nearby movement between neighboring hubs. Active_Link and Links don't need to sit tight for longer time for sit out of gear channel. In this manner the general postponement for steering bundles will be decreased. The synchronization approach for timing the communication protocol is then defined by a FSM modeling as presented. To give every hub a reasonable possibility of being chosen as active hub, every hub can remain in dynamic for a specific day and age tA at greatest. This day and age tA is resolved relying upon the rest of the vitality at every hub. A functioning hub intermittently checks its outstanding vitality, and it changes its state to withdrawal when its residual vitality achieves some limit esteem. The pulling back neighbor is dealt with as a dozing hub amid the day and age tL. After tL, the hub checks its sleep_qualification once more. What's more, if sleep_qualification is fulfilled, it rests. Else, it changes back to its past state. Figure 3 demonstrates the state change graph for jump based disjoint wakeup planning. To define the controller operation of the time scheduling to the developed system a clock controller unit is defined which is as shown below,

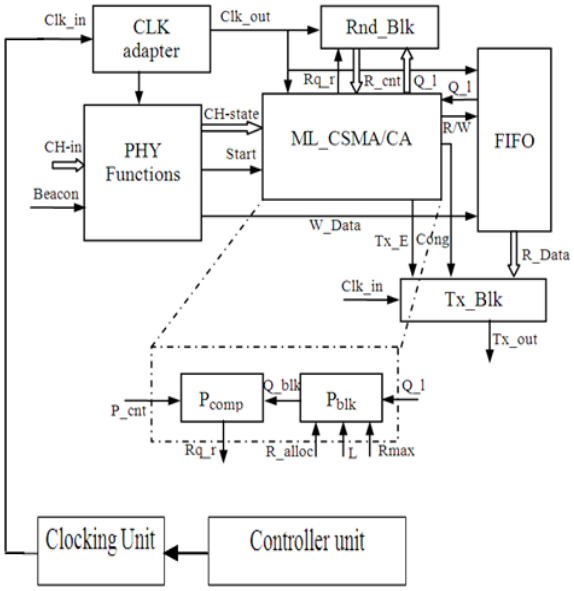

Fig. 4: Proposed controller interface unit

This work is a simplified approach to conserve energy under density based wireless network. However the scheme could be further optimized by considering the distribution characteristic of network. The scheduling scheme doesn't consider any network parameters and isolate controlled.

4. WSN Communication Protocol

To optimize the power utilization in wireless sensor network during data exchange, retaining the node life time, and quality of the data preserved, a power-interference modeling for WSN is suggested. The application of WSN is used in field usage, to measure the physical data for remote monitoring, while transmitting of data it is required to have higher rate of transmission as well preserving the accuracy of data measured, data rate accuracy, as the sensor data are more open to wireless medium, interference is observed. Wherein most of the optimization work is focused on the approach of network life time improvement, less focus is made towards the offered quality of service in the data propagation. In [1] to observe the quality of service in signal propagation model, a receive energy based coding scheme RSSI was proposed.

$$RSSI = 10\log_{10} P_{Rx} \quad (1)$$

The approach, derive the received signal strength based on the received signal strength using the FRISS equation of propagation, defined by,

$$P_{Rx} = \frac{P_{Tx}G_TG_R\gamma^2}{(4\pi)^2D^2} \quad (2)$$

For the communication approach, the communication process is defined by,

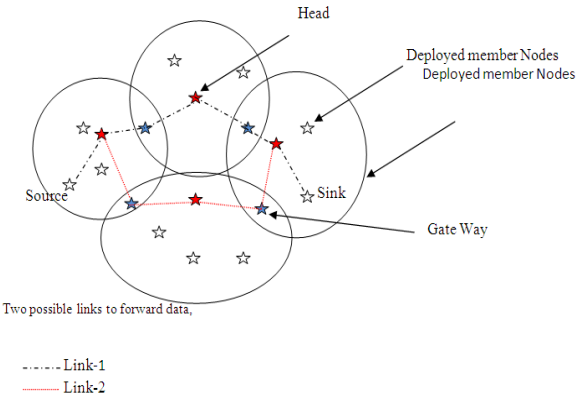

Fig. 5: Communication approach in cluster mode power schedulingscheme

Link satisfying the criterion (A) as stated below will be selected for forwarding.
Head discovery:
For each cluster Ci,
For k nodes, Do,
If power (n(k)) >= n(k-1))
Current Head(H) =n(k)
Else
Current head(H) = n(k-1);
End
end
For all current Heads (H) selected , Do,
Ns = number of side nodes registered,
If Ns(H(i)) >= Ns(H(i+1))
Cluster Head (CH) = Ns(H(i));
Else
Cluster head (CH) = Ns(H(i+1));
End
Gateway:
For all nodes n in network,
If max_power(n(i) ϵ (Ci $\cap$ Ci+1))
n(i) = GWi;
end
Proposed approach:

For a successful communication, a route (Ri) is selected based on the constraint of,

$$\text{Sel_Route} = max(min(\sum I_i)\, P_i) \quad (3)$$

Where,

(I_i) - interference observed by the head node from all the linked GW.

On a request for packet forwarding from a source, the head rather to forwarding to the registered GW directly, runs a decision algorithm (proposing) to schedule the packet forwarding or packet diversion based on the aggregated interference level. The route with minimum interference level measured as a function of received signal strength of the signal at a node defined as RSSI is selected. These selected route are then tested for max(power, Pi) so as to achieve longer node life with lowest interference.

5. Simulation Result

The square information is prepared for power estimation, movement estimation, and pressure. Under recuperation the information is decoded back for its recovery. The obtained simulation results are as illustrated below. The created approach is characterized in VHDL dialect, and the pseudocode condition is defined as;

Pseudo code for the controller unit

Process (knock)

Sleep ='1';

If knock ='1' then

Wake = '1';

Sleep='0';

Else

Wake='0';

End if;

End process;

For the ongoing Realization and asset use the created configuration is combined utilizing Xilinx synthesizer. The acquired union outcomes and their intelligent, mechanical, and timing reports are additionally introduced in the accompanying segment.

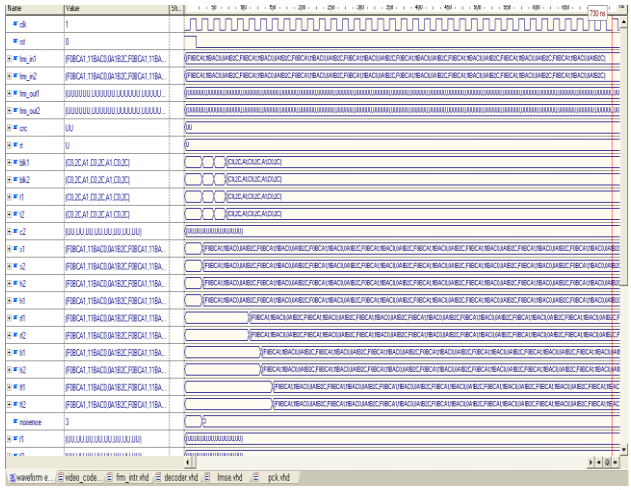

Fig. 6: Re-enactment result demonstrating the planning reproduction for the block division

The above speaks to the given edge data in frm-in1 and frm-in2 line. Each pixel in the edge is examined and its indistinguishable parallel characteristics in 16-bit exactness is needed. The characteristics are padded in the memory segment frm1 and frm2. The information is taken care of in 8 x 8 square. The banner frm-0ut2 and out2 does not demonstrate an impetus as the getting ready movement are been perform-ing and once the entire casing is prepared yield is produced.

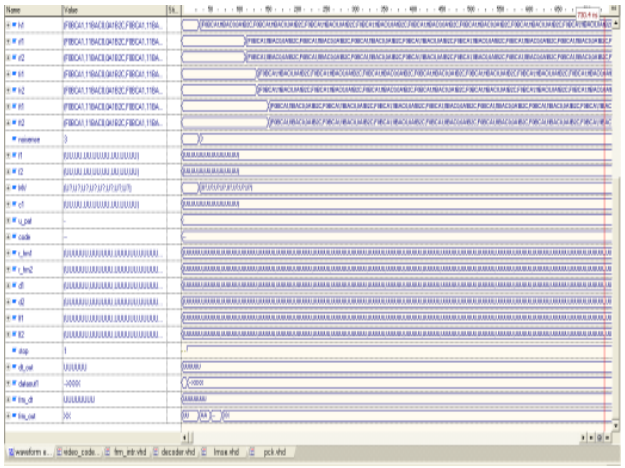

Fig. 7: Simulation result illustrating the data frame

To appraise the component a base mistake esteem is taken. In this re-enactment is registered to an estimation of 3.

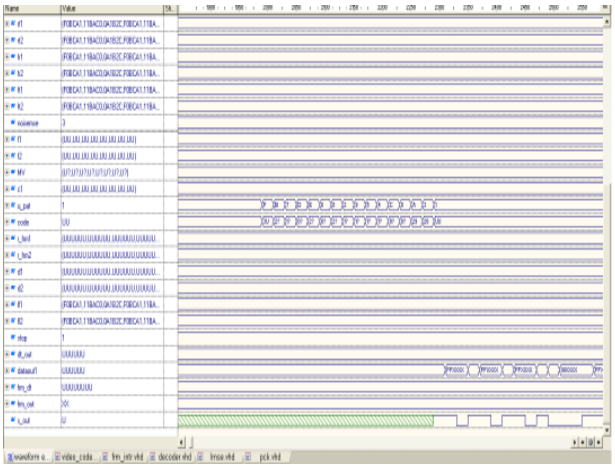

Fig. 8: Simulation result illustrating the generated code sequence

The procedure of encoder for transmission is displayed in figure 8. The created information is shown in the recreation result for the way toward coding for each square of a casing information relating to its distribution. When entire the information is changed it is sent in serial arrangement on the yield port Sout.

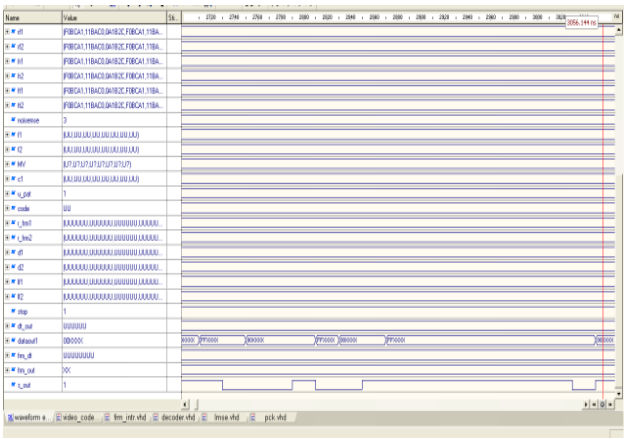

Fig. 9: Recreation result showing the age of serial yield data

This figure illustrates the decoder operation. The above speaks to the given edge data in frm-in1 and frm-in2 line. Each pixel in the edge is scrutinized and its indistinguishable parallel characteristics in 16-bit exactness is needed. The characteristics are padded in the memory segment frm1 and frm2. The information is dealt with in 8 x 8 square. The banner frm-0ut2 and out2 does not show a moti-

vating force as the getting ready action are been performing and once the entire edge is prepared yield is created.

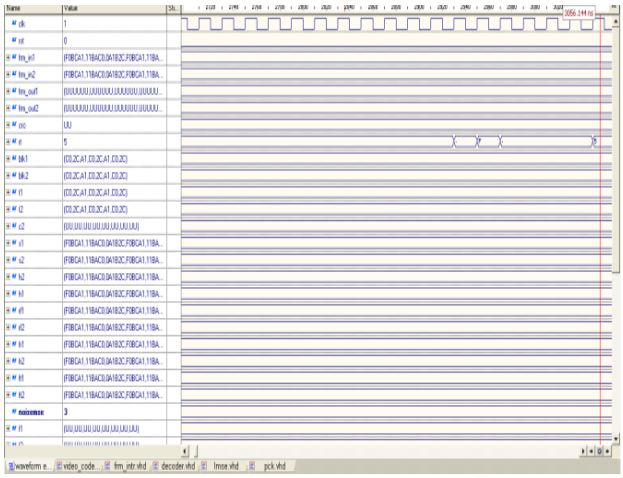

Fig. 10: Recreation coming about showing the age of decoded data

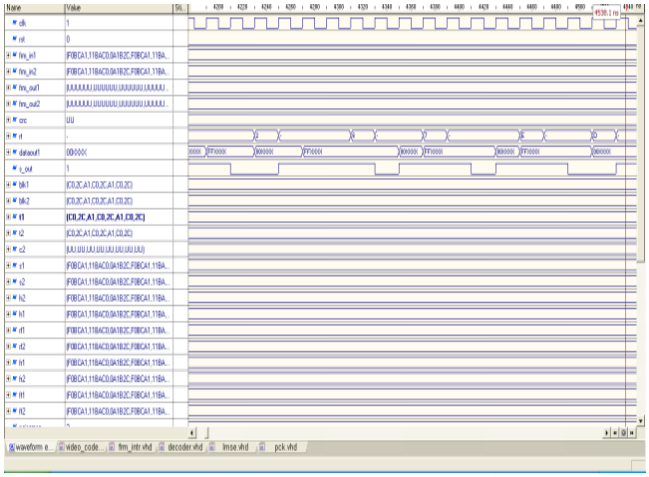

Fig. 11: Re-enactment comes about showing cradled information got and their relating decoded bits

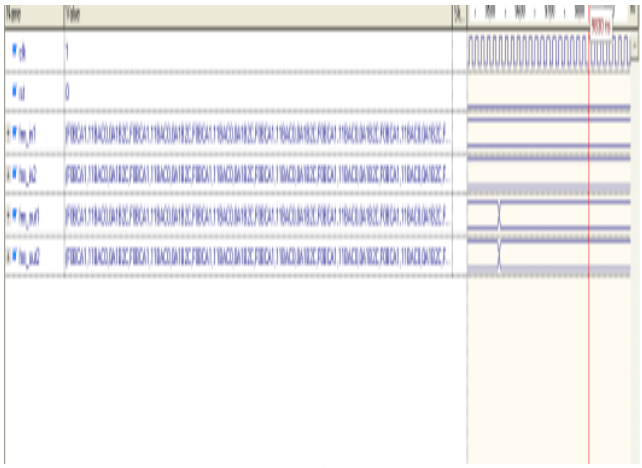

Fig. 12: Outlining the examination of the transmitted and recouped outline succession

The got outline esteems characterized at frm_out lines could be contrasted with frm_in line with watch the similitude in the two information. It is seen that such information a same representing the precision of coding task.

On the gathering this edge information are perused back to follow out the first casing information. For this task an edge per user unit is characterized. The procedure of casing perusing and extraction of edge information is appeared in figure 14. Unique information as acquired in outline coding matches with the per user activity giving exactness of the created framework.

TRB Partition Summary

No partition information was found.

Device Utilization Summary

Logic Utilization	Used	Available	Utilization	Note(s)
Number of Slice Flip Flops	113	88,192	1%	
Number of 4 input LUTs	123	88,192	1%	
Logic Distribution				
Number of occupied Slices	134	44,096	1%	
Number of Slices containing only related logic	134	134	100%	
Number of Slices containing unrelated logic	0	134	0%	
Total Number of 4 input LUTs	261	88,192	1%	
Number used as logic	123			
Number used as a route-thru	138			
Number of bonded IOBs	34	1,164	2%	
IOB Flip Flops	14			
Number of PPC405s	0	2	0%	
Number of GCLKs	1	16	6%	
Number of GTs	0	20	0%	
Number of GT10s	0	0	0%	
Total equivalent gate count for design	2,633			
Additional JTAG gate count for IOBs	1,632			

Synthesis Report

Fig. 13: Summarized synthesis report for the created outline

This figure delineated the acquired coherent prerequisite for the created codec on focusing on FPGA. The report is produced on focusing on onto Xilinx – virtex 2p – FPGA. The required I/O squares, number of flip-flops, clock lines required and intelligent squares are found in the report. A sum of 2633 legitimate door mean the proposed configuration is required.

Power summary: I(mA) P(mW)

Total estimated power consumption: 193

Vccint 1.50V : 75 118

Vccaux 2.50V : 30 70

Vcco25 2.50V : 4 7

Clocks : 0 0

Inputs : 0 0

Logic : 0 0

Outputs :

Vcc : 75 0

Signals : 0 0

Quiescent Vccint 1.50V : 85 118

Quiescent Vccaux 2.50V : 30 70

Quiescent Vcco25 2.50V : 4 7

Thermal summary:

---Estimated junction temperature : 45C

Ambient temp : 45C

Case temp : 45C

Theta J-A : 0C/W

The required power and operational temperature is given for the coding of proposed diagram a force of 193mW is required for the goal Xilinx-FPGA-Virtex-2p. The operational temperature of such use supposedly is 45o C.

6. Conclusion

Power in Adhoc network is a constraint resource. Due to the node standalone characteristic, such networks are limited in performance under high dynamicity. In the process of power utilization, it is required to control its usage to improve network lifespam. To achieve this objective a power organizing scheme is outlined in this paper. The proposed power scheduling scheme controls the node operability by scheduling a node link period, by the incorporation of node, network and refreshment mechanism. The pro-

posed scheduling scheme, save the power utilization, retaining the data integrity by collaboratively operating in the whole network.

References

[1] Jiming Chen, Qing Yu, Bo Chai, Youxian Sun Yanfei Fan, Sherman Shen, "Dynamic Channel Assignment for Wireless Sensor Networks: A Regret Matching Based Approach", IEEE Transactions on Parallel and Distributed Systems, future Issue, 2015.

[2] Haythem Bany Salameh, Mohammed F. Dhainat, Ali Al-hajji, Raed Aqeli, and Mohammad Fathi, "A Two-level Cluster-based Cognitive Radio Sensor Network: System Architecture, Hardware Design, and Distributed Protocols", IEEE International Conference on Cloud Engineering, IEEE, 2015.

[3] Y. Xu, S. Bien, Y. Mori, J. Heidemann, and D. Estrin,"Topology control protocols to conserve energy in wireless ad hoc networks", IEEE Transactions on Mobile Computing, Technical Report CENS Technical Report 0006, Center for bedded Networked Sensing, January2003.

[4] YaXu, "Geography informed Energy Conservation for Ad Hoc Routing", ACM/IEEE International Conference on Mobile Computing and Networking(ACM Mobicom), July 2001.

[5] J.H. Chang, L. Tassiulas, "Energy conserving routing in wireless ad-hoc networks", IEEE INFOCOM, March 2000.

[6] ImrichChlamtaca, Chiara Petriolib, Jason Redi, "Analysis of Energy-Conserving Access Protocols for Wireless Identification Networks", International Conference on Telecommunication Systems (ITC-97), March, 1997.

[7] J.H. Chang, L. Tassiulas, "Routing for maximum system lifetime in wireless ad-hoc networks", 37th Annual Conf. on Communication, Control, and Computing, September 1999.

[8] ArunAvudainayagam, Wenjing Lou, and Yuguang Fang, "DEAR: A Device and Energy Aware Routing protocol for heterogeneous ad hoc networks", Elsevier,2003.

[9] Omar Smail, Bernard Cousin, Rachida Mekki1 and ZoulikhaMekkakia, "A multipath energy-conserving routing protocol for wireless ad hoc networks lifetime improvement", EURASIP Journal on Wireless Communications and Networking, 2014.

[10] AbdelfattahBelghith, "Traffic Aware Power Saving Protocol in Multi-hop Mobile Ad-hoc networks", Journal of Networks, Vol. 2, No. 4, August 2007.

[11] Wei ye, John heidemann, Deborah estrin, "An Energy-Efficient MAC Protocol for Wireless Sensor Networks", SciRes, June 2008.

[12] Jiang, B., B. Ravindran and H. Cho, "Probability-based prediction and sleep scheduling for energy-efficient target tracking in sensor networks". Mobile Computing, IEEE Transactions on. 12(4), 2013, pp. 735-747.

[13] Zhen, C., W. Liu, Y. Liu and A. Yan, "Energy-Efficient Sleep/Wake Scheduling for Acoustic Localization Wireless Sensor Network Node". International Journal of Distributed Sensor Networks, 2014.

[14] Chen, B., K. Jamieson, H. Balakrishnan and R. Morris, "Span: an energy-efficient coordination algorithm for topology maintenance in sensor wireless networks". Wirel.Netw. 8(5), 2002, pp. 481-494.

[15] Xu, Y., J. Heidemann and D. Estrin, "Geography-informed energy conservation for Sensor routing", in Proceedings of the 7th annual international conference on Mobile computing and networking. 2001, ACM: Rome, Italy. p. 70-84.

[16] Bakhtiar, L.A. and S.J. Jassbi, "GAFBone: A new backbone construction for increasing lifetime in wireless sensor networks". International Journal of Computer Network and Information Security (IJCNIS). 6(6), 2014, pp. 18.

[17] Zhu, C., L.T. Yang, L. Shu, V. Leung, J.J. Rodrigues and L. Wang, "Sleep scheduling for geographic routing in duty-cycled mobile sensor networks". Industrial Electronics, IEEE Transactions on. 61(11), 2014, pp. 6346-6355.

[18] HalilYetgin, Kent TszKan Cheung, Mohammed El-Hajjar, and LajosHanzo, "A Survey of Network Lifetime Maximization Techniques in Wireless Sensor Networks" IEEE Communications Surveys & Tutorials, Vol.19, (2), 2017.

[19] Sheikh Tahir Bakhsh1, Rayed AlGhamdi2 , Abdulrahman H. Altalhi2 , Sabeen Tahir2 and Muhammad Aman Sheikh3" Adaptive Sleep Efficient Hybrid Medium Access Control algorithm for nextgeneration wireless sensor networks", EURASIP Journal on Wireless Communications and Networking 2017

[20] BharathKeshavamurthy, AbhayNarasimha, Asif Ahmad A S and Poornima G, "VLSI implementation of a novel sensor architecture for Industrial Wireless Sensor Networks", IEEE, International Conference on Computational Intelligence and Computing Research, 2016.