International Journal of Engineering &Technology, 7 (3.12) (2018) 945 -950

International Journal of Engineering & Technology

Website: www.sciencepubco.com/index.php/IJET

Research paper

Implementation of Controlled Islanding Scheme for Self-healing Smart Grid

Abul Khair[1], Mohd Rihan[2], Mohd Zuhaib[3]

[1,2,3]Electrical Engineering Department, Z.H. College of Engg., Aligarh Muslim University (AMU), Aligarh, India
**Corresponding Author Email: [1]abulkhair1986@gmail.com, [2]m.rihan.ee@amu.ac.in, [3]mohd.zuhaib@zhcet.ac.in*

Abstract

With increase in deregulations and renewable sources of generation, the power system network is leading towards more geographical spread and interconnectedness. This causes significant challenges requiring on-line monitoring and control. It also provides a path for disturbances to propagate causing cascading failure, even blackouts. Wide area detection of potential island formation and controlled separation is considered as an effective tool against a blackout under severe disturbances. In the present work one line remaining algorithm has been utilized for implementation of controlled islanding in a section of Indian power grid.

Keywords: *Islanding, Self-healing grid, Smart Grid, Indian Smart grid, Blackouts.*

1. Introduction

Power grid is spread over large geographical area and is operated in interconnected mode to enhance the reliability and to make the economical use of power generation [1]. With ever increasing electricity demand more distributed generation are being deployed and are interconnected. But these interconnections may provide a path for minor disturbances to propagate throughout the system that may lead to complete shutdown of the whole system. The causes of blackouts are not only the interconnectedness of power system network. Common reasons for the blackouts include the following situations [2]:

- Generations or line outages for maintenance purpose may cause overloading in the system.
- Tripping of lines due to some faults or inappropriate protection may cause heavy overloads on the other lines.
- Inappropriate reactive power support close to the loads.
- Ageing equipment is prone to failure and inadequate right-of-way maintenance.
- Lack of availability of automated actions to prevent further overloading of the lines, arrest voltage decline, and initiate automatic preplanned separation of the power system.

The worst blackout known in the history of power grid occurred in Indian power grid on two successive days i.e., on 30th and 31st July 2012. This blackout affected around 670 million people across 22 Indian states and causes loss of millions of rupees both to utilities and consumers [3]. Severe shortcomings in the infrastructure, operation and management in Indian power grid were exposed once these blackouts. Indian government created an expert board to examine the root causes of these disturbances and to propose actions to avoid recurrence of such events in future [4]. Self-healing property can make the power grid smart and Indian government is working extensively in achieving this goal.

A self-healing smart grid utilizes modern sensors, communication links, and computational power to improve efficiency, stability, and flexibility of the system. Three of its primary functions include:

- Real-time monitoring and reaction, which allows the system to constantly tune itself to an optimal state.
- Anticipation, which enables the system to automatically look for problems that could trigger larger disturbances.
- Rapid isolation, which allows the system to isolate parts of the network that experience failure from the rest of the system to avoid the spread of disruption and enables a more rapid restoration.

The propagation of disturbances that cause cascading failure can be prevented by splitting the large network into self-sustained smaller islands. These self-sufficient smaller regions are termed as intentional/controlled islands [5]. This controlled islanding is considered as a last resort to prevent cascading failures that leads to blackouts. The control center may separate the large network in a controlled manner so that each island has survived its sufficient load with local generation through the island's transmission sub-network. Also, the controlled islanding is more stable and is easier to restore than uncontrolled islanding and thus making self-healing grid. Many studies have been carried out on controlled islanding scheme in achieving self-healing property of grid. A graph theoretic approach and ordered binary decision diagram (OBDD) method were used to simplify the large network and found weak links to separate the regions addressing generator coherency, minimum generation-load imbalance, and transmission capacity constraints in each island [6-8]. Further an application of slow coherency theory of an islanding scheme was presented in paper [9]. Principal Component Analysis (PCA) based fault identification techniques have been brought into islanding detection in power grid [10-12]. Synchrophasor measurements are real time data and can be utilized in better controlled separation of the large network into smaller islands with minimum power imbalance with generation/load shedding [13-14]. In present work one line remaining algorithm (OLR) based potential island detection scheme used in [15] is applied on a section of Indian

Copyright © 2018 Authors. This is an open access article distributed under the Creative Commons Attribution License, which permits unrestricted use, distribution, and reproduction in any medium, provided the original work is properly cited.

power grid. For an initial outage of a line X-Y, this one line remaining algorithm first searches the critical branch in the whole network. The loss of these critical branches would separate the two buses X and Y forming an island. It also records the number of buses in each island.

2. System Splitting Methodology

The algorithm is based on DC power flow solution. It finds the areas that are vulnerable to form island for a single or series of outages of different lines by searching critical branches. The number of critical branches may be greater than one depending upon network topology. For the loss of each critical branch different islands would form. Set an impedance of 0+j1 pu for all branches in the system to get uniform weighted graph. Consider a simple 5-bus system as shown in fig 1.

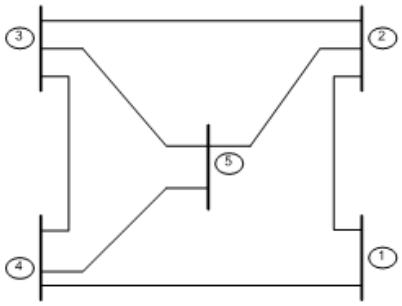

Fig. 1: A simple 5-bus power system network

$$\begin{bmatrix} 2 & -1 & 0 & -1 & 0 \\ -1 & 3 & -1 & 0 & -1 \\ 0 & -1 & 3 & -1 & -1 \\ -1 & 0 & -1 & 3 & -1 \\ 0 & -1 & -1 & -1 & 3 \end{bmatrix}$$

Fig. 2: Admittance matrix for 5-bus system

To create bus admittance matrix, make diagonal elements as they have total number of connections. Set off-diagonal elements to -1 if they have connection, otherwise zero. The system admittance matrix for 5-bus system is shown in fig 2. For any loss of line, admittance matrix Y_{Bus} needs to be updated. For an initial outage of line from bus-3 to bus-4, the diagonal elements for bus-3 and bus-4 is reduced by 1 and off-diagonal elements (3-4) and (4-3) is set to zero as shown in Fig 3.

$$\begin{bmatrix} 2 & -1 & 0 & -1 & 0 \\ -1 & 3 & -1 & 0 & -1 \\ 0 & -1 & 2 & 0 & -1 \\ -1 & 0 & 0 & 1 & 0 \\ 0 & -1 & -1 & 0 & 2 \end{bmatrix}$$

Fig. 3: Updated Admittance Matrix for 5-bus system with outage of line 3-4

$$\begin{bmatrix} 2 & -1 & 0 & -1 & 0 \\ -1 & 3 & -1 & 0 & -1 \\ 0 & -1 & 2 & 0 & -1 \\ -1 & 0 & 0 & 2 & -1 \\ 0 & -1 & -1 & -1 & 3 \end{bmatrix}$$

Fig. 4: Updated Admittance Matrix for 5-bus system with Series outages of lines 3-4 and 4-5

A power injection of +1 pu at bus-3 and -1 pu at bus-4 is given. The critical branches are found by DC power flow as shown in (1), where P is power injection, Y_{Bus} is the system admittance matrix and θ is the voltage angle.

$$P = Y_{Bus} * \theta \qquad (1)$$

All bus voltage angles are obtained from DC power flow solutions. Maximum voltage angle will be at bus-3 and minimum at bus-4. All bus voltage angles for this case are given in Table I. The difference of 1 radian between any two buses will be treated as critical branch. In this case there is no critical branch. Consider after the loss of line 3-4, one more line 4-5 is lost. This is the case of series outages. Y_{bus} need to be modify by reducing diagonal elements 4 and 5 by one and making off-diagonal elements (4-5) and (5-4) zero. The updated Y_{Bus} is given in Fig 4.Here, we can see the difference of 1 radian is between bus-1 and 2 and also between bus-1 and 4.

Table 1: Bus voltage angle (in radian) for 5-bus system

Bus Number	For Line Outages 3-4	For Line Outages 3-4 and 4-5
1	-0.218	0.600
2	0.145	-0.400
3	0.600	-0.733
4	-0.582	1.600
5	0.055	-1.067

Clearly, the algorithm will identify two critical branches as line 1-2 and line 1-4. For critical branch 1-2, the algorithm select more positive angle between the angles of bus-1 and 2. More positive angle is at bus-1 as 0.6 radian.

Now, the algorithm compares this angle with all other angles throughout the system. The angles which are equal to or greater than this (0.6 radian) will remain connected together. Here, angle greater than 0.6 radian is at bus-4 only. Therefore, an island would form with bus-1 and bus-4 connected together for the loss of critical branch 1-2. Similarly, an island would form with only bus-4 for the loss of critical branch 1-4. The result for different outages in 5-bus system is given in Table II. The OLR algorithm has been applied on two different systems for series of outages for different combination of lines. First, it is applied on a smaller IEEE 14-Bus standard system so that we can easily visually analyze the areas that are potential to form islands. Later, it is applied on a section of Indian Power grid. The network topology of IEEE 14-Bus system can be seen in Fig.5. The OLR solutions for this system are given in Table III and bus voltage angles in Table IV. The flowchart for one line remaining (OLR) algorithm is shown in Fig 6.

Table 2: Results for single and series outages of different lines in 5-bus system

Line outages	Critical Branches	Buses in Island Region	Total Number of Buses in Island
3-4	None	0	0
3-4 and 4-5	1-2	1 and 4	2
	1-4	4	1

Table 3: Results for single and series outages of different lines in IEEE14-bus system

Line outages	Critical Branch	Buses in Island Region	Total Number of Buses in Island
2-4	None	0	0
2-4 and 4-9	None	0	0
2-4, 4-9 and 9-10	6-11	10 and 11	2
	10-11	10	1
5-6	None	0	0
5-6 and 4-9	4-7	1,2,3,4 and 5	5
	7-9	6,9,10,11,12,13 and 14	7
5-6	None	0	0
5-6 and 9-10	6-11	10 and 11	2
	9-14	6,10,11,12,13 and14	6
	10-11	10	1
	13-14	6,10,11,12 and 13	5

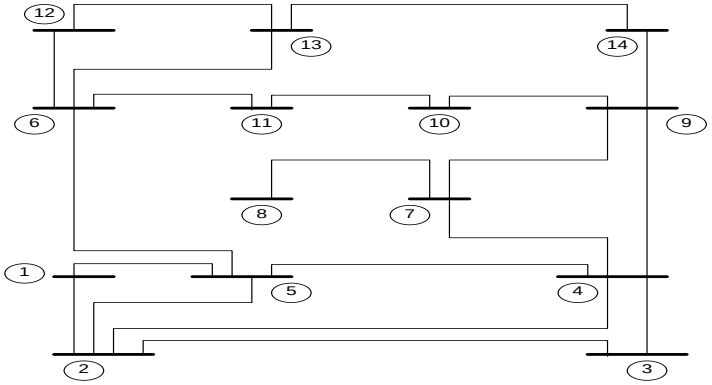

Fig. 5: Network topology of IEEE 14-bus system

Table 4: Bus voltage angle (in radian) for single and series outages of lines in IEEE 14-bus system

Bus	2-4	2-4 and 4-9	2-4, 4-9 and 9-10	5-6	5-6 and 4-9	5-6 and 9-10
1	0.358	0.354	0.092	1.111	1.143	1.167
2	0.553	0.389	0.130	0.968	1.143	1.167
3	0.137	0.496	0.244	0.825	1.143	1.167
4	-0.278	0.602	0.358	0.682	1.143	1.167
5	0.163	0.319	0.055	1.254	1.143	1.167
6	0.020	-0.070	-0.363	-1.396	-0.857	-1.500
7	-0.231	-0.009	0.775	0.349	0.143	1.167
8	-0.231	-0.009	0.775	0.349	0.143	1.167
9	-0.183	-0.620	1.192	0.016	-0.857	1.167
10	-0.115	-0.437	-2.363	-0.455	-0.857	-3.500
11	-0.048	-0.254	-1.363	-0.926	-0.857	-2.500
12	-0.006	-0.139	-0.168	-1.220	-0.857	-1.167
13	-0.031	-0.208	0.026	-1.043	-0.857	-0.833
14	-0.107	-0.414	0.609	-0.514	-0.857	0.167

3. Implementation of OLR algorithm in a section of Indian power grid

A 400-kV network of western power grid, India [16] has been taken to check the effectiveness of this methodology. It consists of 46 buses spread over five states namely Maharashtra, Madhya Pradesh, Chhattisgarh, Gujarat and Goa. The network topology for this system can be seen in Fig.7. The results obtained by OLR algorithm are remarkable for this system as shown in Table V and Table VI. For an initial outage of single line 9-34, only one critical branch 4-9 exists. If this critical branch goes off, an island will form with only two numbers of buses namely 8 and 9. There is no critical branch for series outage of lines 9-34 and 10-18. But one more line 20-41 goes off, a critical branch 40-42 exists. For the loss of this critical branch, an island would form with a large number of buses eighteen in numbers. So, if the operators have these results before the event they had intentionally tripped line 4-9 so that a smaller region would have been formed with only two numbers of buses. Therefore, it is important for the operators to have the knowledge about each critical branch for any outages. The formation of islands with small number of buses is not of great importance but with large numbers, they need to be highly alert.

Table 5: Results for single and series outages of different lines in 400 kV network of western power grid, India

Line outages	Critical Branches	Buses in Island Region	Total Number of Buses in Island
10-21	None	0	0
10-21 and 12-15	None	0	0
10-21, 12-15 and 17-41	39-40	13,14,15,20,21,22,23,24,25,26,40,41,42,43,44,45 and 46	17
9-34	4-9	8 and 9	2
9-34 and 10-18	None	0	0
9-34, 10-18 and 20-41	40-42	17,18,19,27,28,29,30,31,32,33,34,35,36,37,38,39,40 and 41	18

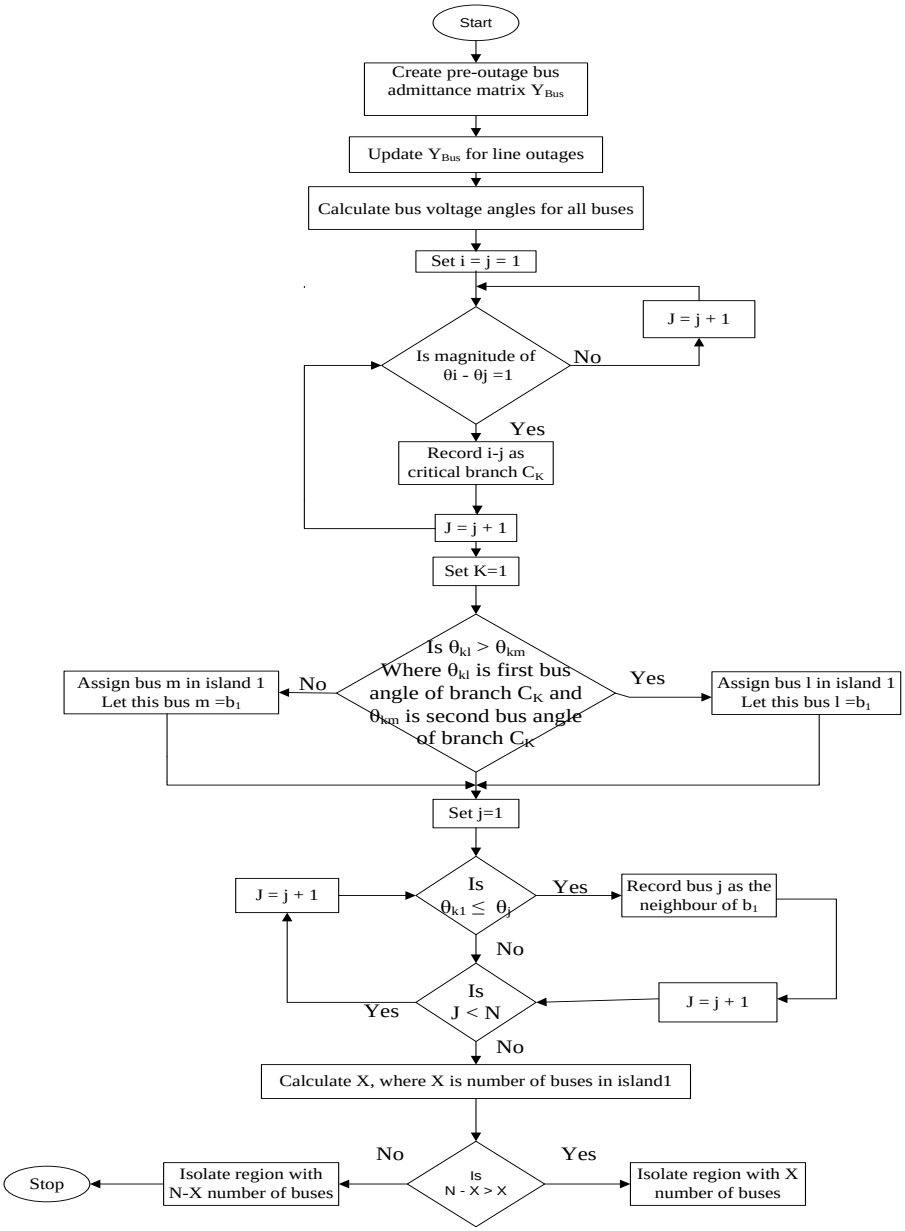

Fig. 6: Flowchart for one line remaining (OLR) algorithm

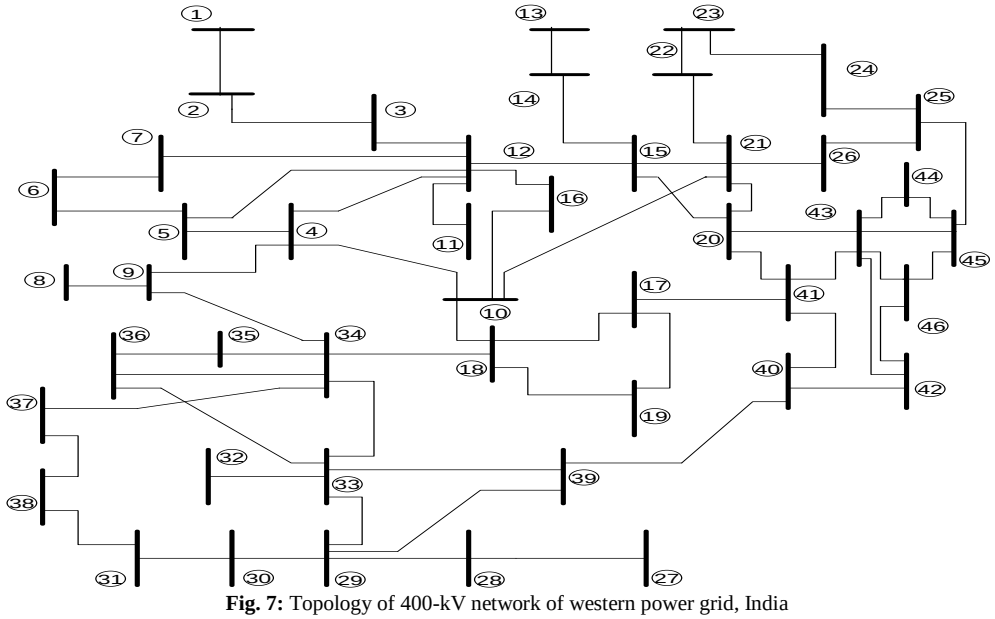

Fig. 7: Topology of 400-kV network of western power grid, India

Table 6: Bus voltage angle (in radian) for single and series outages of lines in 400 kV network of western power grid, India

Bus	10-21	10-21 and 12-15	10-21, 12-15 and 17-41	9-34	9-34 and 10-18	9-34, 10-18 and 20-41
1	0.228	1.648	1.355	0.585	0.944	1.123
2	0.228	1.648	1.355	0.585	0.944	1.123
3	0.228	1.648	1.355	0.585	0.944	1.123
4	0.405	1.226	1.318	0.864	1.068	1.115
5	0.304	1.467	1.340	0.705	0.997	1.120
6	0.278	1.528	1.345	0.665	0.979	1.121
7	0.253	1.588	1.350	0.625	0.961	1.122
8	0.335	0.809	1.107	1.864	1.068	1.115
9	0.335	0.809	1.107	1.864	1.068	1.115
10	0.754	0.977	1.472	0.303	1.263	1.103
11	0.228	1.648	1.355	0.585	0.944	1.123
12	0.228	1.648	1.355	0.585	0.944	1.123
13	-0.315	-1.846	-1.772	0.287	0.589	1.146
14	-0.315	-1.846	-1.772	0.287	0.589	1.146
15	-0.315	-1.846	-1.772	0.287	0.589	1.146
16	0.491	1.313	1.414	0.444	1.103	1.113
17	0.177	0.006	2.350	-0.235	-1.109	-1.769
18	0.367	0.394	1.684	-0.293	-1.545	-1.654
19	0.272	0.200	2.017	-0.264	-1.327	-1.712
20	-0.393	-1.232	-1.791	0.080	0.206	1.236
21	-0.778	-1.460	-1.753	0.196	0.617	1.080
22	-0.728	-1.407	-1.735	0.169	0.549	0.997
23	-0.678	-1.354	-1.716	0.142	0.480	0.915
24	-0.628	-1.301	-1.697	0.115	0.412	0.833
25	-0.577	-1.248	-1.678	0.088	0.343	0.751
26	-0.678	-1.354	-1.716	0.142	0.480	0.915
27	0.133	0.075	0.134	-0.732	-0.937	-1.351
28	0.133	0.075	0.134	-0.732	-0.937	-1.351
29	0.133	0.075	0.134	-0.732	-0.937	-1.351
30	0.159	0.138	0.286	-0.780	-0.990	-1.377
31	0.185	0.202	0.438	-0.829	-1.042	-1.404
32	0.173	0.171	0.365	-0.806	-1.017	-1.391
33	0.173	0.171	0.365	-0.806	-1.017	-1.391
34	0.264	0.393	0.895	-0.974	-1.200	-1.482
35	0.246	0.348	0.789	-0.941	-1.163	-1.464
36	0.228	0.304	0.683	-0.907	-1.127	-1.446
37	0.238	0.329	0.743	-0.926	-1.147	-1.456
38	0.212	0.265	0.591	-0.877	-1.095	-1.430
39	0.066	-0.086	-0.251	-0.610	-0.804	-1.285
40	-0.107	-0.504	-1.251	-0.291	-0.459	-1.113
41	-0.107	-0.577	-2.021	-0.149	-0.454	-1.941
42	-0.279	-0.848	-1.480	-0.116	-0.119	-0.113
43	-0.371	-1.046	-1.617	-0.015	0.072	0.483
44	-0.399	-1.068	-1.620	-0.004	0.105	0.494
45	-0.427	-1.089	-1.622	0.007	0.137	0.505
46	-0.359	-0.995	-1.573	-0.041	0.030	0.291

4. Conclusion

The areas in the electrical power grid that are vulnerable to form island for an initial outage of a single line or series of lines is effectively identified by the one line remaining (OLR) algorithm. This OLR algorithm has been applied in this paper to the standard IEEE 14-bus system and on 400-kV network of western power grid, India. The algorithm correctly identifies the critical branches in the system for an individual outage of a line independent of the other outages or series of outages of lines. For the loss of each critical branch in the system, different island would form. The algorithm also records the nomenclature and number of buses in each island. These results can be very useful for the control center in making decisions for controlled islanding in the event of a fault that could have propagated and caused cascading outages which leads to blackouts.

References

[1] M. Rihan, M. Ahmad, M. S. Beg, "Developing Smart Grid in India: Background and Progress", Innovative Smart Grid Technologies – Middle East (ISGT Middle East) 2011 IEEE PES Conference on, pp. 1-6.

[2] D. Novosel, M. M. Begovic, V. Madani, "Shedding light on blackouts", IEEE Power Energy Mag., vol. 2, no. 1, pp. 32-43, Jan./Feb. 2004.

[3] Report on Grid Disturbance On 30th & 31st July 2012. Available:www.cercind.gov.in/2012/orders/Final_Report_Grid_Disturbance.pdf

[4] Mohd Zuhaib, Mohd Rihan,"PMU Installation in Power Grid for Enhanced Situational Awareness: Challenges, Issues and Application"4th IEEE Uttar Pradesh Section International Conference on Electrical, Computer and Electronics (UPCON); 26-28 Oct. 2017.

[5] H. You, V. Vittal, and Z.Yang, "Self-healing in power systems: An approach using islanding and rate of frequency decline based load shedding" IEEE Trans. Power Systems, vol. 18, no. 1, pp. 174-181, Feb. 2003.

[6] K. Sun, D. Zheng, and Q. Lu, "Splitting strategies for islanding operation of large-scale power systems using OBDD-based methods," IEEE Trans. Power Syst., vol. 18, no. 2, pp. 912–923, May 2003.

[7] Q. Zhao, K. Sun, and D. Zheng et al., "A study of system splitting strategies for island operation of power system: A two-phase method based on OBDDs," IEEE Trans. Power Syst., vol. 18, no. 4, pp. 1556–1565, Nov. 2003.

[8] K. Sun, D. Zheng, and Q. Lu, "Searching for feasible splitting strategies of controlled system islanding," Proc. Inst. Elect. Eng., Gen., Transm., Distrib., vol. 153, no. 1, pp. 89–98, Jan. 2006.

[9] H. You, V. Vittal, and X. Wang, "Slow coherency-based islanding," IEEE Trans. Power Syst., vol. 19, no. 1, pp. 483–491, Feb. 2004.

[10] Y. Guo, K. Li, and D. Laverty, "A statistical process control approach for automatic anti-islanding detection using synchrophasors," in Proc. IEEE Power Energy Soc. Gen. Meeting, 2013, pp. 1–6.

[11] X. Liu, L. David, K. Li, M. John, and M. Sean, "Principal component analysis of wide area phasor measurements for islanding detection a geometric view," IEEE Trans. Power Del., vol. 30, no. 2, pp. 976–985, Apr. 2015.

[12] Y. Guo, K. Li, and D. Laverty, “Loss-of-main monitoring and detection for distributed generations using dynamic principal component analysis,” J. Power Energy Eng., vol. 2, no. 04, p. 423, 2014.
[13] H. You, V. Vittal, and X. Wang, “Slow Coherency-Based Islanding,” IEEE Trans. on Power Systems, vol. 19, No. 1, pp. 483-491, Feb.2004.
[14] B. Yang, V. Vittal, G.T. Heydt, “Slow Coherency Based Controlled Islanding – A Demonstration of the Approach on the August 14, 2003 Blackout”, CERTS 2006.
[15] T. Werho, V. Vittal, S. Kolluri, S. M. Wong, “A potential island formation detection scheme supported by PMU measurements”, IEEE Trans on Power Systems, vol. 31, no. 1, pp. 423-431, Jan 2016.
[16] R. K. Gajbhiye, A. De, S. A. Soman, "Computation of optimal break point set of relays—an integer linear programming approach", IEEE Trans. Power Del., vol. 22, no. 4, pp. 2087-2098, Oct. 2007.