International Journal of Engineering & Technology, 7 (3.19) (2018) 169-172

International Journal of Engineering & Technology

Website: www.sciencepubco.com/index.php/IJET

Research paper

A Widely Tunable Bandpass CMOS Filter Based on a Low-Voltage Using Operational Transconductance Amplifier Based Active Inductor

Ridouane Hamdaouy[1*], Boussetta Mostapha[2], Khadija Slaoui[3]

University Sidi Mohamed Ben Abdellah, LESSI Laboratory, Department of Physics Faculty of Sciences, Dhar El Mehrez B.P. 1796, 30003 Fez-Atlas,Morocco

**Corresponding author E-mail: ridouane.hamdaouy@usmba.ac.ma*

Abstract

In this paper, an exuberant inductor (ai) with high linearity and high powerful range, together with a base scope of parts, is displayed.

This paper offers a compelling method to perceive a cmos band skip channel of low power utilization by method for variety of transconductance in expressions of inclination front line change. The outlined sift through works in a sensibly high recurrence assortment. The reenactment and test results are accommodated 130 nm tsmc13rf rhythm virtuoso.

Keywords: *BPF, OTA, practical band pass filter, floating active inductor.*

1. Introduction

In solid consolidated microwave circuits, a large portion of the semiconductor area is possessed by methods for detached components, while dynamic gadgets play a peripheral position in district calling. Uninvolved inductors are in expansive part chargeable for the area squander. Winding inductors, in all actuality, require substantial amounts of substrate put, require air spans, have compelled transfer speed, unnecessary gathering opposition, and cross-talk inconveniences. Therefore, it can be beneficial to refresh winding inductors with dynamic circuits that carry on like inductors, however that involve a completely diminished semiconductor district. Also, lively circuits can grandstand an exceptionally unnecessary superb segment, essentially upgrading the unreasonable recurrence exhibitions.

A detached inductor endlessly used in gadgets industry for the usage of channels, low clamor speakers (lna), oscillators, and numerous others… anyway creation of this component in coordinated ic presents immense downsides as far as chip region, tuning assortment, et cetera… for the manufacture of 10 nh on chip inductor, rough region is required 450um * 450um [1]. A fiery inductor requires an absolutely little chip region as opposed to its uninvolved partner. There are various topologies to execute a cmos enthusiastic inductor [3]. Anyway in most recent days, ota based absolutely technique is generally normal both in gliding and also grounded dynamic inductor acknowledgment.

2. Basics of OTA

The circuit is made by way out of a voltage-controlled bleeding edge supply portrayed by method for its transconductance parameter gm , that models the transistor, and by utilizing a capacitance c. Underneath a few circumstances on the estimations of c, and gm , this circuit recommends an inductive direct, in light of the fact that the conventional capacitance gyroscope.

An incredible ota is a voltage oversaw bleeding edge supply (vccs) with a boundless transfer speed and in addition info and yield impedance [5, 4]. A mosfet joined by a predisposition exhibit day supply is the best execution of an ota appeared in [1, 2, 7, 8]. The yield contemporary of this ota is spoken to as

$$I_0 = g_m (V_1 - V_2) \quad (1)$$

Where V_1 and V_2 are the non-inverting and inverting voltages.

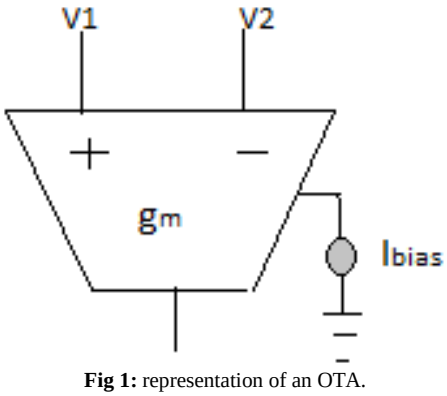

Fig 1: representation of an OTA.

Copyright © 2018 Authors. This is an open access article distributed under the Creative Commons Attribution License, which permits unrestricted use, distribution, and reproduction in any medium, provided the original work is properly cited.

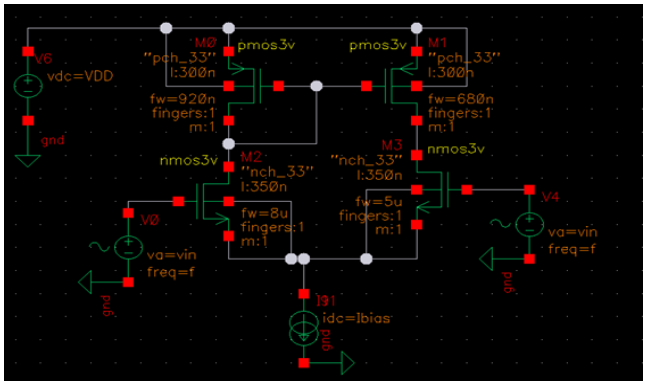

Fig 2: MOS transistor

the OTA can be communicated as [2, 7]

$$g_m=\sqrt{(2\beta I_{bias})}=\sqrt{\left(2\mu C_{ox}\frac{W}{L}I_{bias}\right)} \quad (2)$$

3. OTA Based Active Inductor Realisation

Presently the yield current of OTA1,

$$I_{O1}=g_{m1}*(V_1-V_2) \quad (3)$$

again

$$g_{m1}=\frac{I_{bias}}{2v_t} \quad (4)$$

Where $\mathbf{V_t}$ is the thermal voltage. The output terminal of OTA1 is connected to a grounded capacitor C, and voltage across the C is defined as

$$V_x=\frac{I_{o1}}{sc} \quad (5)$$

and $s=j\omega$, ω= angular frequency of operation Now the input voltages of OTA2 areV_x. And V_2 So,

$$I_{O2}=g_{m2}*(V_x-V_2) \quad (6)$$

Inserting the value of above equations in (6) ,

$$, \quad I_{O2} = g_{m2}*\left(\frac{g_{m1}*(V_1-V_2)}{sc}-V_2\right)$$
$$=\left(\frac{g_{m1}g_{m2}*V_1}{sc}-\frac{g_{m1}g_{m2}*V_2}{sc}-g_{m2}V_2\right) \quad (7)$$

As

$\frac{g_{m1}g_{m2}}{sc} \gg g_{m2}$ so ignoring the third term of above equation, $I_{O2}=\left(\frac{I_{bias}(n)^2*V_n}{4v_t{}^2sc}\right)$ Where n=1,2. Again $I_{O2}=\left(\frac{I_{bias}(3)}{I_{bias}(2)}\right)I_{O3}$ But in the whole design, all bias currents are same in magnitude. So,

$$I_1=I_{O2}=-I_{O3} \quad (8)$$

And

$$I_2=-I_{O2} \quad (9)$$

It can be shown that

$\mathrm{I_1}=-\mathrm{I_2}$ in magnitude.

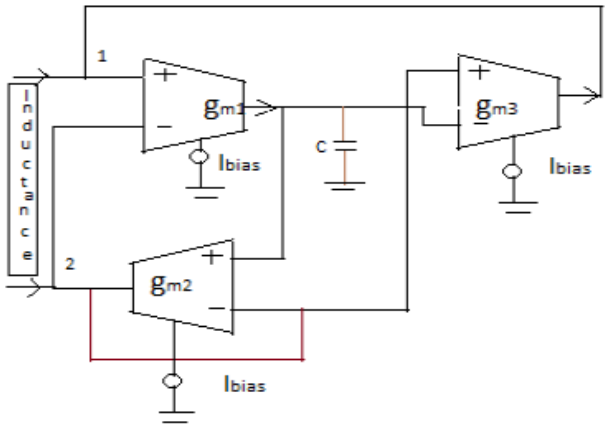

Fig 3: Floating inductance realization I.

$$Z_{12}=\frac{(V_1-V_2)}{I_1}=\frac{sc}{g_m{}^2}=\frac{(4\,v_t{}^2sc)}{I_{bias1}*I_{bias2}}=s\,L_{eqv12} \quad (10)$$

The imaginary part of the impedance has a zero in ω= 0 , and it is always positive only if: $L_{eqv12} > 0$

This circumstance is vital to pick up an inductive conduct. We should explanation that the fanciful a piece of the impedance goes to zero when ω is going to limitless. This demonstrates the inductive conduct of the system underneath assessment is reasonable best inside a limited data transfer capacity. Be that as it may, the assessment of the essential spinoff of the fanciful part recommends that, on this perfect case, this data transfer capacity can be exceptionally immense. An appropriate inclination of the parameters in condition (10) makes it suitable to set reverberation recurrence (f res) at exceptionally over the top cost, with the goal that the inductive conduct might be procured in a wide transmission capacity. In this design $g_m=g_{m1}=g_{m2}=g_{m3}$ and all I_{bias} are equal.

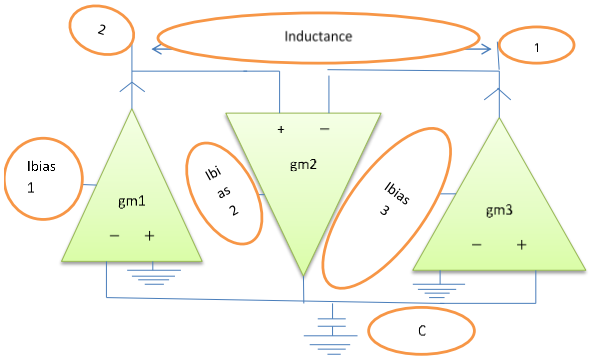

Fig 4: floating inductance realization II

In this model $V_{1+}=V_{3-}=V_X$ Doing the similar calculation,

$$L_{eqv12}=\frac{(4\,v_t{}^2C)}{I_{bias1}*I_{bias2}}=\frac{(C)}{g_{m3}*g_{m2}}=\frac{(C)}{g_m*g_m} \quad (11)$$

This circuit is anything but difficult to figure it out. All the above circuit speaks to a coasting inductor (no terminal is grounded).

We comment that the likelihood to control the estimation of the arrangement opposition is crucial in the outline of AIs; truth be told, a negative obstruction can cause insecurity, while a positive non-zero obstruction presents misfortunes. The objective is to get a zero obstruction in the band of intrigue, and a positive opposition somewhere else, despite the fact that, in a few applications, the nearness of a negative opposition could be endured, for example when the AI is utilized as the tuning component in band pass channel.

4. Simulation Results

I pick a similar differential OTA design with a same measurements so the entire circuit can work in immersion in 3.3 volt rather than 2.5 volt as in [2, 4]. So the enhanced OTA gives low power utilization. The measurements are recorded in the table [1].

Table 1. MOS Dimensions transistors in a single OTA.

Transistors	Old W/L ratio μm	New W/L ratio μm
M0	0 .92/0.3	0 .92/0.3
M1	0 .86/0.3	0 .86/0.3
M2	8/0.35	8/0.35
M3	5/0.35	5/0.35

The planned ota has a totally colossal three db data transfer capacity appeared in fig (four) which implies it can be worked to outline a broad range band skip channel. I select the c charge 319pf. With the guide of changing over the c charge additionally you can at present supplant the l expense. The deliberate three db data transfer capacity is 103.Seventy three khz at the injustice contemporary 30ua. The gliding inductance test system requires best 12 mos transistors. I reenacted the drifting inductor ii demonstrated in fig(four).The entire circuit demonstrated in fig (7). The fig (8) speaks to a principal aloof band sidestep sift through and fig(nine) speaks to its advantage versus recurrence plot. The winding inductor has a cost of 15.03h, c=319pf, and r=3333 ohms. The 3db data transmission of the inactive channel is in the assortment of 1.97 khz to two.541 khz. Presently I supplanted the aloof inductor as far as drifting dynamic inductor and the preferred standpoint versus recurrence plot is demonstrated in fig(10) and find the expressions of advantage, bandwidth(three db transfer speed is 59.Forty seven khz to 163.2 khz) and thunderous frequency(in latent usage it's miles 2.096khz and for ota inductor based absolutely bpf it's far ninety four.39khz for 3-db transmission capacity figurings) which point of fact delineates that the acknowledged structure is a vivacious inductor of 15.03h. You can at present investigate the inductive nature plotting impedance (in the middle of 1 and a few terminal) versus recurrence plot and estimating the linearity which cleary recommends the inductive idea of the circuit [3]. Both real and fanciful components likewise show a reverberation that constrains the usable recurrence scope of the ai. This conduct, much the same as the genuine one, which by the by ensures great exhibitions while the Inductor is used in a band-skip cell, in which misfortunes, outside the passband, blast the channel selectivity. The linearity of the ai is in like manner a basic capacity to be considered. The ai, being an invaluable comments Circuit, is naturally uproarious; in this way, it isn't reasonable for managing low-power alarms. With the goal that you can have an unreasonable pleasant thing, nonetheless, the precise inclination of the enthusiastic components and of its predisposition factor is of foremost hugeness.

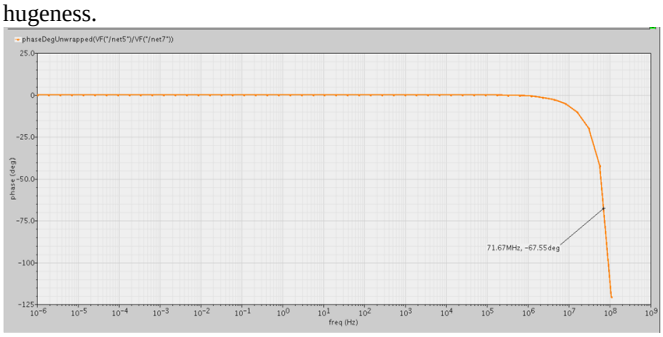

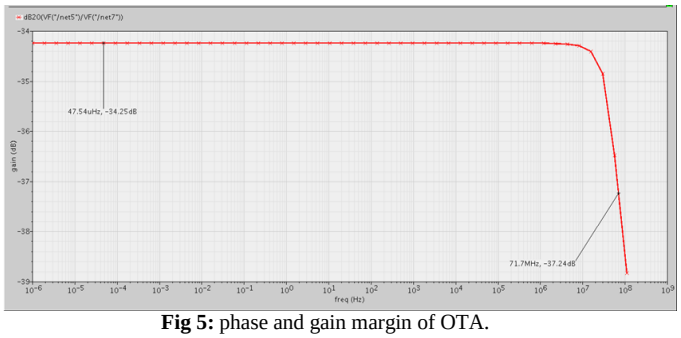

Fig 5: phase and gain margin of OTA.

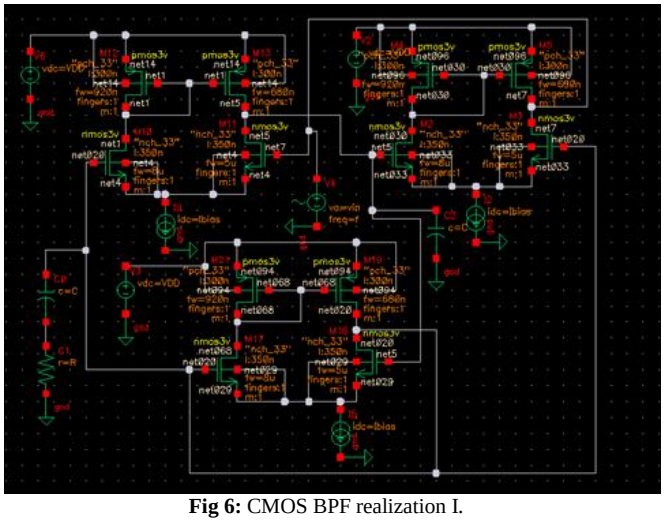

Fig 6: CMOS BPF realization I.

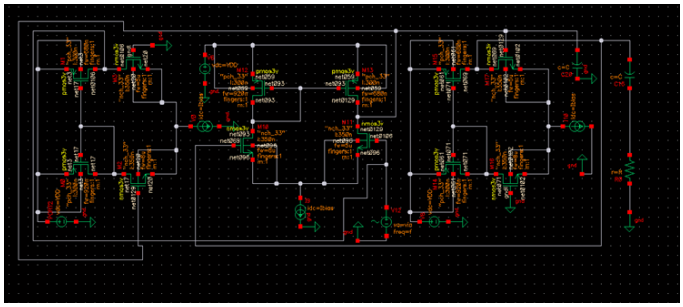

Fig 7: CMOS realization II.

the circuit has been recreated on rhythm virtuoso

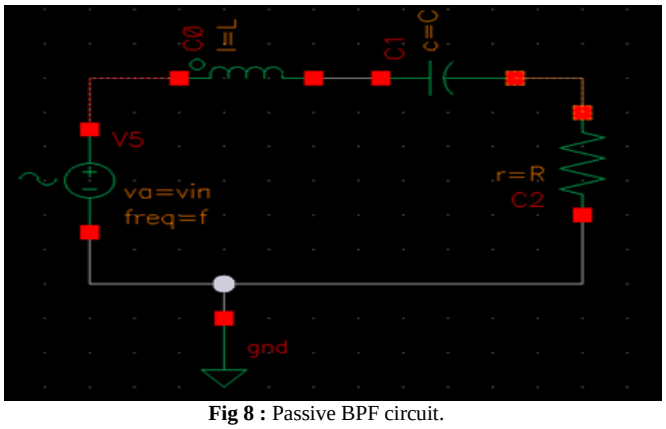

Fig 8 : Passive BPF circuit.

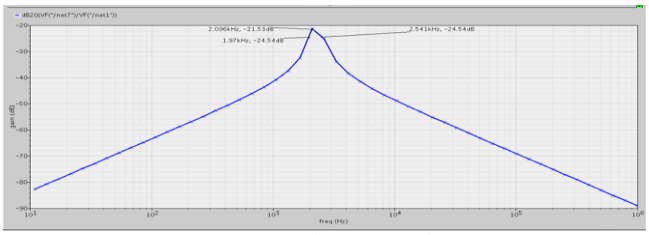

Fig 9: Passive band pass filter gain vs frequency plot.

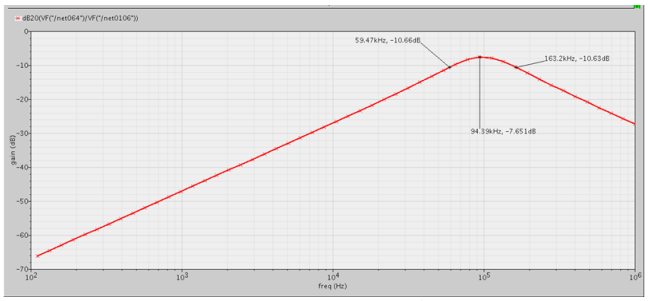

Fig 10: Active inductor based BPF gain vs frequency realization.

The channel is focused at 94.39KHz, for Bluetooth and radar applications, where there is a stringent requirement for amazing component and high reverberation recurrence .

The deliberate aggregate traverse of the dynamic inductor acknowledged II is 103.73 kHz; the pick up is nearly approximy as that of the inactive partner. The aggregate power utilization of the composed BPF appeared in fig (7) is 297uW.

5. Conclusion

We have proposed an inordinate q, high-linearity, and high assortment fre-quency ai, requiring a negligible scope of parts. An over the top pleasant issue band-pass channel alongside the ai has been planned as a demonstrator. The sift through has an inside recurrence of ninety four.37khz, in the bluetooth recurrence range and favorable position of db.The proposed ai, if pleasantly composed, is unequivocally strong in the whole recurrence assortment and can be utilized as a part of sensible bundles. We proclamation that this thing is typically belittled in the writing, and, to our brilliant seeing, best couple of works supply records about ai soundness, vitality taking care of, and clamor.

References

[1] T.Asto and T. Ito,"Design of low distortion active inductor and its applications", Analog, Integer Circ Sig Process(2013) 75:245-255.

[2] Pipat Prommee and Kobchai Dejhan," An integrable electronic controlled quadrature, sinusoidal oscillator using CMOS operational transconductance amplifier", INT.

[3] J. ELECTRONICS, 2002, VOL. 89, NO. 5, 365-379. (Taylor and Francis).

[4] M. Fakhfakh, M. Pierzchala,"Synthesis of active inductors using SFG stamps", Microelectronics Journal 44(2013) 1107-1122.

[5] P. Soni, B.P. Singh, M. Bharadwaj,"Design of OTA based floating inductor", IEEE, conference 2011.

[6] E.Sanchez-Sinencio and J.Silvia-Martinez,"CMOS transconductance amplifiers,architectures, and active filters: a tutorial", IEE Proc.-Desvice Syst., No. 1,February 2000.

[7] R. Banchum, R. Chaisricharoen, B.Chipipop and B.Sirinaovakul,"In depth analysis of the CMOS OTA-based floating inductors", 2006 International Symposium on Intelligent Signal Processing and Communication System, Tottori, Japan.

[8] M. Kumngern, B. Knobnob, K. Dejhan, "Electronically tunable high-input impedance, voltage mode universal biquadratic filter based on simple CMOS OTAs",Int. J. Electron. Commun. (AEU)64(2010)934-939.

[9] Koton, Jaroslav, Norbert Herenscar, Kamil Vrba and Bilgin Metin,"Current and voltage mode, third order quadrature oscillator", 2012 13th International Conference of Electrical and Electronic Equipment(OPTIM) 2012.