International Journal of Engineering & Technology, 7 (3.19) (2018) 97-104

International Journal of Engineering & Technology

Website: www.sciencepubco.com/index.php/IJET

Research paper

The Development of a Process Control System for the Production of Partially Reducing Nickel Oxide in a Tubular Rotary Kiln

Yu.V. Sharikov[1], C. Liu[2]

[1]Professor of Saint-Petersburg Mining University
[2]postgraduate student of Saint-Petersburg Mining University

Abstract

This article describes the results of a control system development by the process of nickel oxide reducing to obtain partially reducing nickel oxide (PRNO) in a tubular rotary kiln (TRK). The purpose of the recovery in TRK is to obtain an enlarged, maximally recovered product before the anode electric fusion, since such an electrically conductive product, as partially reduced nickel oxide (PRNO), allows to reduce the electricity and reducing agent consumption during the process of electric smelting, which is economically advantageous. TRK is an object with distributed parameters. The reducing product quality is determined by the temperature profile along a kiln length. The development of a temperature profile control system is required, ensuring the receipt of a specified quality product for the objects with distributed parameters. The cell model was used in the work, corresponding to the 5 technological zones of the process, the dynamic model of the object was constructed and the dynamic behavior of the object was studied with step perturbations and the use of 3 different control systems. The analysis of the obtained data made it possible to establish that the best control results are obtained by a fuzzy regulator use.

Keywords:

1. Introduction

The obtaining of PRNO in the calcining department of a refining shop includes the following basic operations: the thickening of the nickel concentrate pulp, nickel concentrate filtration, an oxidizing firing of the nickel concentrate in a fluidized bed (FB) kiln with a cinder obtaining, a partial reduction of cinder in the rotary kilns with the cooling of the obtained PRNO.

The selection of optimal parameters to carry out regenerative roasting helps to increase the degree of PRNO metallization.

Restorative firing is one of the most solid-phase processes used most of all in modern pyrometallurgy [1]. The quality of the product obtained depends significantly on the selected temperature regime and the accuracy of its maintenance. Therefore, the temperature control system has a decisive influence on the quality and technical and economic parameters of nickel production process. Figure 1 shows nickel cinder firing scheme in a TRK.

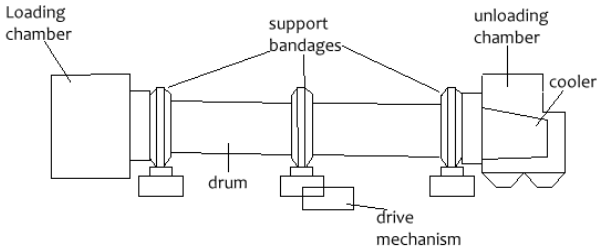

Figure 1: Installation scheme for nickel cinder calcination

The theory of the TRK operation shows that the productivity and the main dimensions of the kilns depend on the four most important processes occurring in these kilns: chemical process, the movement of materials, the movement of gases and heat exchange process.

The main thing in a kiln is the process of physical-chemical transformations of raw materials and the products of metallurgical processing. All processes must be subordinated to this main process.

The reduction of metal oxides by carbon is one of the main methods used in metallurgy for the production of metals, alloys and various compounds.

The interactions of solid carbon with gaseous oxidants - complete and incomplete combustion, the reactions with carbon dioxide - are heterogeneous ones and refer to the following type:

solid phase + gas = gas

All of them lead to the disappearance of the solid phase, to its gasification.

Schematically, the combustion of carbon can be divided into several successive stages [2].

The first of these is the delivery of an oxidant from the core of the gas atmosphere to the surface of phase division by molecular and convective diffusion.

The second stage develops under the influence of the force field created by carbon atoms on the surface of its crystals, and consists in the physical and chemical adsorption of oxidant molecules,

Copyright © 2018 Authors. This is an open access article distributed under the Creative Commons Attribution License, which permits unrestricted use, distribution, and reproduction in any medium, provided the original work is properly cited.

accompanied by volumetric dissolution in some cases.

The third stage is reduced to the interaction of the adsorbed oxidant with the surface carbon atoms and to the development of reaction products also adsorbed on carbon.

Finally, the fourth and the fifth stages are the desorption of the reaction products and their removal to the gas phase.

Thus, the combustion process of carbon includes three categories of stages as a whole: diffusion, adsorption and actually chemical one, of which the last two are intertwined very closely. The speed of the combustion process diffusion stage is determined by the speed of gas flow, its nature, the dimensions of solid carbon pieces, the temperature, the total pressure and the nature of the substances that make up the gas mixture.

The process of metal oxide reduction by solid carbon passes through three reactions:

$$\begin{aligned} &\text{I.MeO} + \text{CO} = \text{Me} + \text{CO}_2 \\ &\text{II.CO}_2 + \text{C} = 2\text{CO} \\ &\text{III.MeO} + \text{C} = \text{Me} + \text{CO} \end{aligned} \quad (1)$$

The reaction III is equal to the sum of I and II. These reactions can be completed, i.e. perform the complete disappearance of metal and carbon oxide, if, of course, the gas phase is removed from the reaction zone.

The beginning of oxide reduction by carbon occurs according to the following reaction:

$$\text{MeO} + \text{C} = \text{Me} + \text{CO} + \Delta Z^{\circ}. \quad (2)$$

This process is determined by the value of the isobar potential ΔZ°. From the dissociation pressure of the metal oxide and carbon monoxide, it is also possible to determine the onset of reduction.

If the dissociation pressure of the metal oxide is greater than the dissociation pressure of the carbon monoxide, then the reduction reaction takes place, otherwise the metal oxidizes with carbon monoxide.

The metal oxides in a cinder are in a solid state. Consequently, the reduction of nickel, copper, iron and cobalt oxides in TRK occurs in the solid phase.

2. Mathematical Model of Control Object

The aim of tubular rotary kiln control is to stabilize the operating temperature of a kiln operation in order to improve the quality of the obtained PRNO at a kiln outlet by temperature strict control in the reduction and cooling zones. In order to simulate the process of nickel oxide reduction in the TRK, a cell model of the kiln was used, the number and size of the cells corresponded to the number of technological zones observed during the kiln operation [3].

Figure 2 shows the structure of flows in the kiln, from which it is possible to isolate the main channels of managing and disturbing influences of a control object.

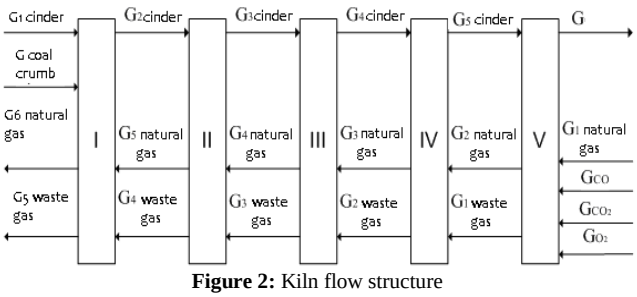

Figure 2: Kiln flow structure

A reducing firing kiln can be considered as an object with distributed parameters, but this representation of an object complicates its mathematical description [4-7]. In this paper a cell model is presented as a set of models of ideal mixing for each zone [8,9]

The purpose of simulation is to obtain static and dynamic characteristics of a control object through various channels to calculate the control systems for technological parameters. A control object model is a closed system of differential equations under known initial conditions.

Each of five zones of a kiln is presented in the form of a perfect mixing unit. Mathematically, this object is described by the system of five differential equations, which are the expressions of the dynamic heat balance.

$$\begin{cases} m_I c_I \dfrac{dT_I}{dt} = G_{1cinderFBD} c_{1cinderFBD} T_{1cinderFBD} + G_{coalcrumb} c_{coalcrumb} T_{coalcrumb} + \\ + G_{5naturalgas} c_{5INaturalgas} T_{5naturalgas} + G_{4Wastegas} c_{4Wastegas} T_{4OWastgas} - G_{2cinder} c_{2cinder} T_{2cinder} - \\ - G_{6NaturalGas} c_{6naturalgas} T_{6naturalgas} - G_{5WasteGas} c_{5WasteGas} T_{5WasteGas} \\ m_{II} c_{II} \dfrac{dT_{II}}{dt} = G_{2cinder} c_{2cinder} T_{2cinder} + G_{4NaturalGas} c_{4NaturalGas} T_{4NaturalGas} + \\ + G_{3WasteGas} c_{3WasteGas} T_{3WasteGas} - G_{5NaturalGas} c_{5NaturalGas} T_{5NaturalGas} - \\ - G_{4WasteGas} c_{4WasteGas} T_{4WasteGas} - G_{3cinder} c_{3cinder} T_{3cinder} \\ m_{III} c_{III} \dfrac{dT_{III}}{dt} = G_{3cinder} c_{3cinder} T_{3cinder} + G_{3NaturalGa} c_{3NaturalGas} T_{3NaturalGas} + \\ + G_{2WasteGas} c_{2WasteGas} T_{2WasteGas} - G_{4cinder} c_{4cinder} T_{4cinder} - G_{4NaturalGa} c_{4NaturalGas} T_{4NaturalGas} - \\ - G_{3WasteGas} c_{3WasteGas} T_{3WasteGas} \\ m_{IV} c_{IV} \dfrac{dT_{IV}}{dt} = G_{4cinder} c_{4cinder} T_{4cinder} + G_{2NaturalGa} c_{2NaturalGas} T_{2NaturalGas} + \\ + G_{1WasteGas} c_{1WasteGas} T_{1WasteGas} - G_{5cinder} c_{5cinder} T_{5cinder} - G_{3NaturalGa} c_{3NaturalGas} T_{3NaturalGas} - \\ - G_{2WasteGas} c_{2WasteGas} T_{2WasteGas} \\ m_V c_V \dfrac{dT_V}{dt} = G_{5cinder} c_{5cinder} T_{5cinder} + G_{1NaturalGa} c_{1NaturalGas} T_{1NaturalGas} + G_{CO_2} c_{CO_2} T_{CO_2} + \\ + G_{CO} c_{CO} T_{CO} + G_{O_2} c_{O_2} T_{O_2} - G_{PRNO} c_{PRNO} T_{PRNO} - G_{2NaturalGa} c_{2NaturalGas} T_{2NaturalGas} - \\ - G_{1WasteGas} c_{1WasteGas} T_{1WasteGas} \end{cases} \quad (3)$$

Having transformed the equations, we obtain the following:

$$\begin{cases} m_I c_I \dfrac{dT_I}{dt} = G_{1cinderFBF} c_{1cinderFBF} T_{1cinderFBF} + G_{coalcrumb} c_{coalcrumb} T_{coalcrumb} + \\ + G_{5NaturalGa} c_{5NaturalGas} T_{5NaturalGas} + G_{4WasteGas} c_{4WasteGas} T_{4WasteGas} - G_{2cinder} c_{2cinder} T_{2cinder} - \\ - G_6 c_{6NaturalGas} T_{6NaturalGas} - G_{5WasteGas} c_{5WasteGas} T_{5WasteGas} \\ m_{II} c_{II} \dfrac{dT_{II}}{dt} = G_{2cinder} c_{2cinder} T_{2cinder} + G_{4NaturalGa} c_{4NaturalGas} T_{4NaturalGas} + \\ + G_{3WasteGas} c_{3WasteGas} T_{3WasteGas} - G_{5NaturalGa} c_{5NaturaGas} T_{5NaturalGas} - \\ - G_{4WasteGas} c_{4WasteGas} T_{4WasteGas} - G_{3cinder} c_{3cinder} T_{3cinder} \\ m_{III} c_{III} \dfrac{dT_{III}}{dt} = G_{3cinder} c_{3cinder} T_{3cinder} + G_{3NaturalGa} c_{3NaturalGas} T_{3NaturalGas} + \\ + G_{2WasteGas} c_{2WasteGas} T_{2WasteGas} - G_{4cinder} c_{4cinder} T_{4cinder} - G_{4NaturalGa} c_{4NaturalGas} T_{4NaturalGas} - \\ - G_{3WasteGas} c_{3WasteGas} T_{3WasteGas} \\ m_{IV} c_{IV} \dfrac{dT_{IV}}{dt} = G_{4cinder} c_{4cinder} T_{4cinder} + G_{2NaturalGa} c_{2NaturalGas} T_{2NaturalGas} + \\ + G_{1WasteGas} c_{1WasteGas} T_{1WasteGas} - G_{5cinder} c_{5cinder} T_{5cinder} - G_{3NaturalGa} c_{3NaturalGas} T_{3NaturalGas} - \\ - G_{2WasteGas} c_{2WasteGas} T_{2WasteGas} \\ m_V c_V \dfrac{dT_V}{dt} = G_{5cinder} c_{5cinder} T_{5cinder} + G_{1NaturalGa} c_{1NaturalGas} T_{1NaturalGas} + G_{CO_2} c_{CO_2} T_{CO_2} + \\ + G_{CO} c_{CO} T_{CO} + G_{O_2} c_{O_2} T_{O_2} - G_{PRNO} c_{PRNO} T_{PRNO} - G_{2NaturalGa} c_{2NaturalGas} T_{2NaturalGas} - \\ - G_{1WasteGas} c_{1WasteGas} T_{1WasteGas} \end{cases} \quad (4)$$

Where

Q_i – heat flow;

G_i – mass consumption;

c_i – heat capacity;

T_i – the temperature in a certain kiln zone.

The resulting system of dynamic model equations was solved in the MathCad program to determine the dynamic characteristics of a control object.

3. Determination of Object Dynamic Characteristics

During the determination of the dynamic characteristics for an object by its ramp-up curve the input is provided with either a stepped test signal or with a square pulse. In the second case, the response curve must be completed to a corresponding acceleration curve [10].

When an acceleration curve is removed, it is necessary to fulfill a number of conditions:

1. If a stabilization system is projected, an acceleration curve must be removed in the vicinity of a process operating point.

2. The acceleration curves must be removed both with positive and with negative jumps of the control signal. By the type of curves, one can judge the degree of an object asymmetry. With a small asymmetry, it is recommended to calculate the controller settings according to the average values of the transfer function parameters. Linear asymmetry is manifested in thermal control objects most often.

3. If a noisy output is present, it is better to shoot several acceleration curves with their subsequent overlapping and an average curve obtaining.

4. When you shoot an acceleration curve, it is necessary to choose the most stable process modes, for example, night shifts, when the action of external random perturbations is unlikely.

5. When you shoot an acceleration curve, the amplitude of a test input signal must be large enough to distinguish the acceleration curve against the noise background clearly on the one hand, and it must be small enough not to disturb the normal course of the process on the other hand.

Having shot the acceleration curve and having evaluated the nature of a control object (with or without self-alignment), you can determine the parameters of a corresponding transfer function. Before the processing, it is recommended to normalize an acceleration curve (the range of a normalized curve variation makes 0 - 1) and to single out the amount of pure time lag [10] from its initial section, as Fig. 3 shows.

The example of an acceleration curve processing for an object whose pure lag time $\tau_з = 3\text{min}$ is shown on Figure 3.

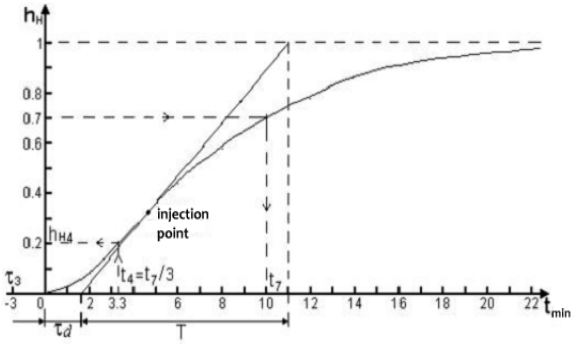

Figure 3: Acceleration curve graph

The dynamic gain ratio K of an object is defined as the ratio of an output signal increment to an input signal increment in the vicinity of an operating point.

The dynamic characteristics of objects can be determined by the acceleration curve in two ways.

1) The method of the tangent to the point of the acceleration curve inflection. In this case, the inflection point corresponds to the transition of the curve from the acceleration mode to the deceleration rate of an output signal rate increase.

The time constant T and the dynamic lag $\tau_д$ are determined in accordance with the graph on Figure 3, i.e. $\tau = \tau_з - \tau_д$.

2) The formula method allows one to calculate the value of the dynamic delay and the time constant analytically using the formulas [10].

$$\tau_д = \frac{\mathrm{t_B}\ln(1-h_A) - \mathrm{t_A}\ln(1-h_B)}{\ln(1-h_A) - \ln(1-h_B)} \qquad (5)$$

$$T = \frac{\mathrm{t_A} - \tau_д}{n(1-h_A)}$$

where the value h_A, in the vicinity of the curve inflection point, and the value h_B is taken equal to 0,8 - 0,85. By these values, the moments of time $\mathrm{t_A}$ and $\mathrm{t_B}$ are determined [10].

In this paper, the first method was used to determine the dynamic characteristics: the tangent method at the point of the acceleration curve inflection.

4. Transfer Function Characteristic Desctiption

Since the transfer function of the system determines its dynamic properties, the initial task of SAR calculation is reduced to its transfer function determination.

The graphs of the transfer functions determine the gain and transfer functions along the perturbation channels. Figure 4 shows a transient process example.

$$K = \frac{\Delta T}{\Delta X} \qquad (6)$$

where K - the gain factor, ºC/kg;

ΔT - the difference between the final and the initial values of temperatures, ºC;

ΔX - the difference between the final and the initial values of the flow, kg.

$$W(p) = \frac{K}{Tp+1}e^{-\tau \cdot p} \qquad (7)$$

where K - the gain factor, ºC/kg;

T - the time constant, c.;

τ - lag time.

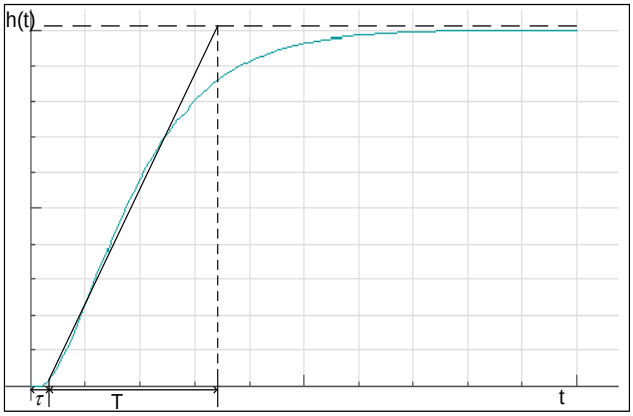

Figure 4: Transient process example

4.1 Creation of the Process Model in the Matlab Program Based on the Heat Mode of the Tubular Kiln

Specifying internal and external perturbations, we obtain transient characteristics through the system of equations solution (4), according to which the transfer functions are developed (see Figures 5-9).

Perturbation channels:

1. nickel oxide consumption (external disturbance);

2. coal crumb consumption (external disturbance);

3. the temperature in the hottest zone of the kiln (internal disturbance).

Control channel:

1. The consumption of natural gas

The expenses for nickel oxide, coal crumb and natural gas were increased by 50%, 20% and 10%, respectively. The temperature in the kiln hottest zone was increased by 100 °C.

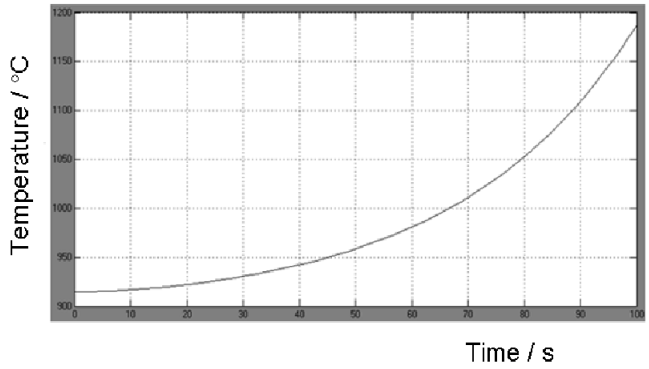

Figure 5- Nickel oxide consumption increase by 50%

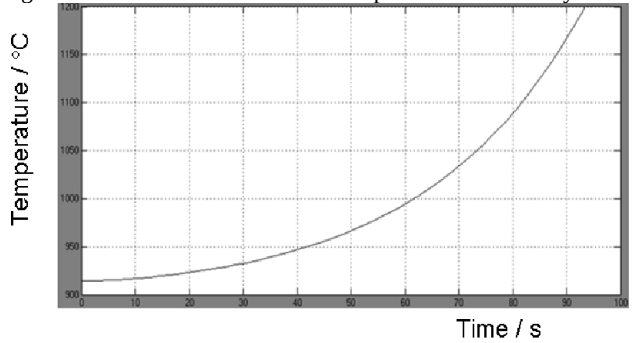

Figure 6: Coal crumb consumption increase by 20%

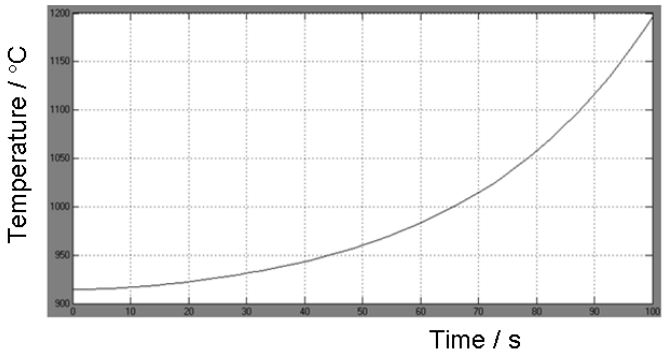

Figure 7: Natural gas consumption increase by 10%

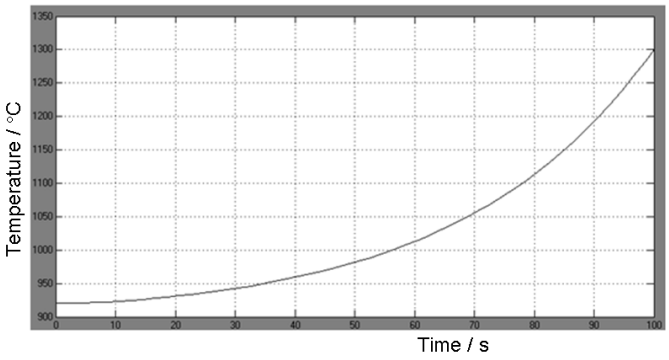

Figure 8: Temperature increase in the kiln hottest zone by 100°C

4.2 Determination of Transfer Function Characteristics

Transfer function with nickel oxide consumption increase by 50%:

$$K = \frac{300}{80{,}68} = 3{,}718, \quad W(p) = \frac{3{,}718}{10p+1}$$

Transfer function at coal crumb consumption increase by 20%:

$$K = \frac{300}{74{,}81} = 4, \quad W(p) = \frac{4}{11p+1}$$

Transfer function at natural gas consumption increase by 10%:

$$K = \frac{300}{77{,}73} = 3{,}859, \quad W(p) = \frac{3{,}859}{3p+1}$$

Transfer function at temperature increase in the kiln hottest zone by 100°C:

$$K = \frac{300}{108} = 2{,}77, \quad W(p) = \frac{2{,}77}{9p+1}$$

5. Control System Synthesis for Kiln Temperature Stabilization

In order to stabilize kiln temperature, we take the system acting on the deviation of the stabilized value from the set value (see Figure 9).

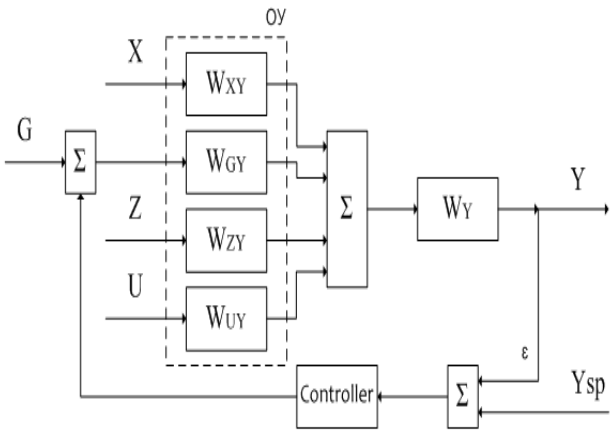

Figure 9: Block diagram of the automatic temperature control system

CO - control object;

X – perturbation (cinder consumption);

Z – disturbance (coal crumb consumption);

U – disturbance (the temperature in the kiln hottest zone);

G – control signal (natural gas consumption);

Y – output parameter of an object (temperature at kiln output);

$Y_{зад}$ – the set value of an output parameter;

W_{XY} – CO transfer function over the perturbation channel;

W_{ZY} – CO transfer function over the perturbation channel;

W_{UY} – CO transfer function over the perturbation channel;

W_{GY} - CO transfer function over the perturbation channel;

ε - an error on the regulator input.

A linear regulator with proportional-integral-differential (PID) regulation law, the regulator with Smith pre-fusion and a fuzzy-regulator were chosen as a regulator for this model. The schemes of regulatory processes with the abovementioned regulators are presented on Figures (10-12). Figure 10 shows the scheme of the process control system for the recovery roasting of nickel oxide with PID regulator, where the control parameter is the consumption of natural gas. Figure 11 shows the graph of the transient process according to the temperature at the kiln exit with PID-regulation.

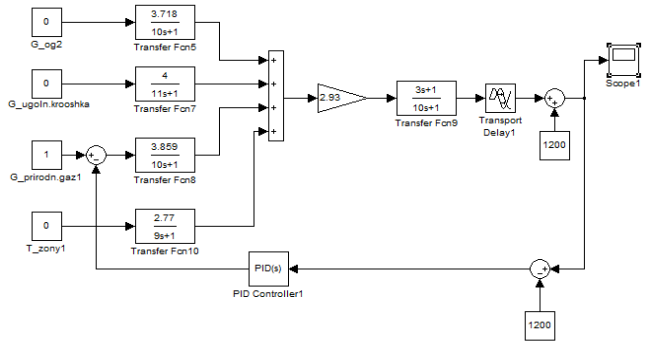

Figure 10: Schematic diagram of the process control system for regenerative roasting of nickel oxide with a PID regulator

PID regulator characteristics:

Kp=0,35

Ki=0,05

Kd=0,083

It is possible to recommend the use of a PID regulator for the most important circuits, which provides the highest speed in the system. However, it should be borne in mind that this condition is met only with its optimal settings (three parameters are configured). With the increase of delay, negative phase shifts increase sharply in the system, which reduces the effect of the regulator differential component. Therefore, the quality of the PID regulator operation for the systems with a long delay becomes comparable to the quality of PI regulator operation. Besides, the presence of noise in the measuring channel within the PID regulator system leads to significant random oscillations of the control regulator signal, which increases the variance of the control error and an actuator value. Thus, the PID regulator should be selected for control systems with a relatively low noise level and a lag value in a control object. The examples of such systems are temperature control systems.

When you choose a regulator type, it is recommended to be guided by the value of delay ratio to the time constant in the object τ / T . If τ / T <0,2 you can select relay, continuous or digital regulators. If 0,2< τ / T <1, then a continuous or a digital, PI or PID regulator must be selected. If τ / T <1, then they select a special digital regulator with a predictor that compensates for the delay in a control loop. However, the same regulator is also recommended for use at lower τ / T ratios [9].

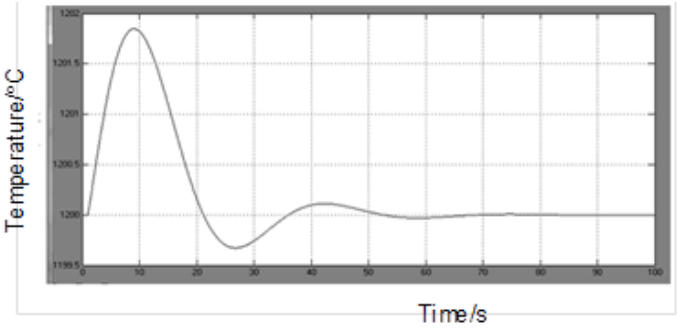

Figure 11: Transient process diagram by temperature at the kiln output for PID regulation

PID regulator was set manually. The calculation of parameters by formulas can not give an optimal adjustment of a regulator, since the obtained results are based analytically on greatly simplified models of an object. Besides, models use the parameters identified with a certain error [10].

The setting is based on the rules that are used for manual configuration. These rules are derived from experience, theoretical analysis and numerical experiments. They are reduced to the following:

- the increase of the proportional coefficient increases the speed and reduces the margin of stability;

- the control error decreases more rapidly with time at the decrease of the integral component;

- the decrease of the integration constant reduces the stability margin;

- the increase of the differential component increases the stability margin and speed [10].

The main indicators of the system regulation quality with PID regulator (see Table 1).

Automatic control systems require not only the stability of control processes in the entire range of loads to an object. An operational system also requires that the automatic control process is carried out while ensuring certain quality indicators. Such indicators are the following ones: [10].

1. Regulation period.

2. Re-adjustment.

3. Oscillation index.

4. Attenuation degree.

The control time is the time in which the regulated value begins to differ from a steady-state value in the transient process by less than a predetermined value δ, where δ is the control accuracy. It is usually assumed that $\delta = 3\% - 5\%$ from the magnitude of the jump by a reference signal [10].

When the perturbing effect is worked out, the amount of overregulation is determined from the following relation

$$\delta = \frac{X_2}{X_1} \cdot 100\% \quad (8)$$

where X_2 - the second amplitude peak of the transition curve;

X_1 - the first amplitude peak of the transition curve.

The oscillation index characterizes the magnitude of the modulus maximum of the frequency transfer function in a closed system (at the resonance frequency) and, thereby, characterizes the oscillatory properties of the system [10].

The degree of damping shows the degree of oscillation attenuation, and it is determined by the formula 9

$$\psi = \frac{X_1 - X_3}{X_3} \quad (9)$$

where X_1 - the first amplitude peak of transition curve;

X_3 - the third amplitude peak m of the transition curve;

Table.1: Indicators of regulation quality during PID regulator use

Regulation period, s	Re-adjustment, %	Variation indicator	Attenuation degree, %
65	18,9	1,85	0,113

Smith predictor or time lag compensator is one of disturbance control types, in which delays are taken into account directly to stabilize a control loop [10].

The purpose of compensator introduction is the delay block removal from the loop with a direct connection, which is the cause of instability, and its removal from the contour, where it does not affect the stability of the system.

The main drawback of control methods with one control loop is the impossibility to take into account the influence of all process variables on the system output. One of the main problems requiring a solution is the description of the interrelationships between several process variables [10, 11].

The Smith controller was used in order to ensure a net lag compensation. The control scheme for the reduction of nickel oxide is presented on Figure 12. The Smith regulator is used in the cases when the quality requirements for the transient processes in a control system are high. Figure 12 shows the graph of the transition process by temperature at the kiln outlet for the system regulation using a time lag compensator.

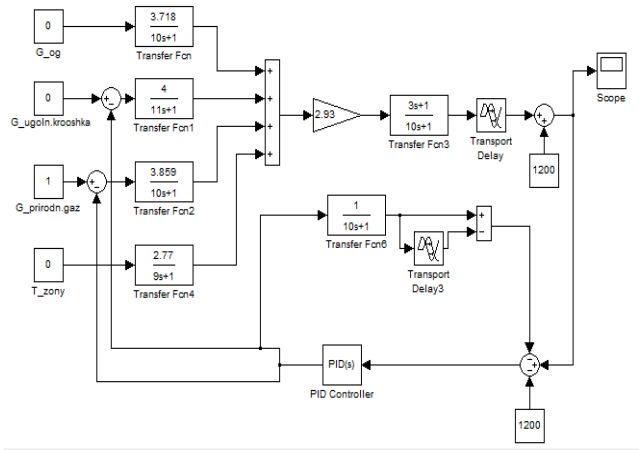

Figure 12: The scheme of the process control system for the regenerative roasting of nickel oxide with Smith regulator

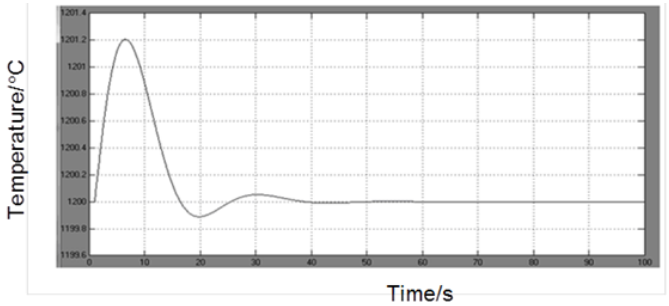

Figure 13: Transient process graph of system regulation by temperature at the kiln output with the Smith regulator

The calculation of the system main quality indicators using the Smith regulator was carried out in the manner similar to the calculations of the system indicators using the PID regulator (see Table 2).

Table 2: Regulation quality indicators with the Smith regulator use

Regulation period, s	Re-adjustment, %	Variability indicator	Attenuation degree, %
40	8,33	1,2	0,23

The model with FUZZY regulator was also considered.

Fuzzy Logic Toolbox allows you to create and edit fuzzy-control systems with fuzzy logic, called in the terms of the MATLAB program system as Fuzzy Inference System or FIS. These systems can be created using both graphical tools and MATLAB working window commands [13, 14].

Fuzzy logic is the generalization of traditional Aristotelian logic for the case when truth is regarded as a linguistic variable that takes values of the type "very true", "more or less true", "not very false", etc. These linguistic values are represented by fuzzy sets.

The variable that takes the values from a set of words or phrases of some natural or artificial language is called linguistic one. The set of admissible values of a linguistic variable is a term-set. The setting of a variable value with words (without the use of numbers) is more natural for a person. Every day we make decisions based on linguistic information such as: "a very high temperature"; "a long trip"; "a quick response"; "a beautiful bouquet"; "a harmonious taste", etc. Psychologists have determined that almost all numerical information is verbally recoded and stored as linguistic terms in the human brain. The concept of a linguistic variable plays an important role in a fuzzy logical inference and in decision-making on the basis of approximate reasoning [15, 16].

FIS-editor is designed to create, save, load and print the systems of fuzzy inference, as well as to edit the following properties:

• a system type;

• a system name;

• a number of input and output variables;

• the name of input and output variables;

• fuzzy logic output parameters [15,16]

PID - like fuzzy - regulator was implemented (Figure 14).

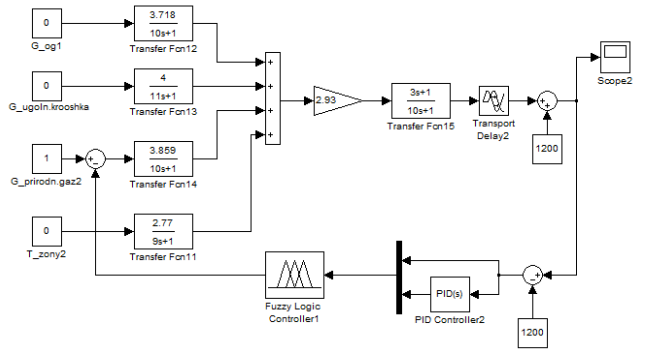

Figure 14: Schematic diagram of the process control system for regenerative roasting of nickel oxide with a fuzzy regulator

PID regulator characteristics:

Kp=1,093

Ki=0,86

Kd=0,206

A fuzzy system is implemented that implements the PID regulator using the graphical user interface (GUI) tools of the "Fuzzy Logic Toolbox" package. Using the "Fuzzy Logic Toolbox" package, you can build the fuzzy systems of two types - Mamdani and Sugeno. Let us consider the system of Mamdani type. With the fuzzy command in the MATLAB window, we call the Fuzzy Inference System Editor window, select the Mamdani system type, specify three inputs for the proportional, integral and differential components (x1, x2 and x3) and one output y.

The base of rules for the fuzzy-regulator was developed. The rules are formed by the type: IF ... AND ..., THEN .... The resulting file is saved as fuzzy1.fis.

The fuzzy1 file name is specified in the Fuzzy Logic Controller window of unit parameters. The Model Properties option is selected in the model window from File menu. CallBacks tab is selected in an opened window and the Model pre-load function field has the following: fuzzy1 = readfis ('fuzzy1').

This command will place the file fuzzy1.fis in WorkSpace (the working space of the Matlab system) each time the model file is opened. This is necessary for the normal functioning of the model. It is worth noting that when you make changes to the fis-file, you need to place its corrected version in WorkSpace, either by using Export/To Workspace option item of File menu, or by pressing Ctrl + T, or by closing and opening the model file each time (however, the last option is tiring).

The parameter "off" must be set in the Simulation Parameters dialog window of the Simulation menu, in the Advanced tab for the Boolean logic signals option. In this case, the logic blocks will allow the variables in a floating-point form.

The graphs of transient processes are presented on Figure 15 for the model with fuzzy-regulator. Table 3 shows the main indicators of system regulation quality with fuzzy-regulator.

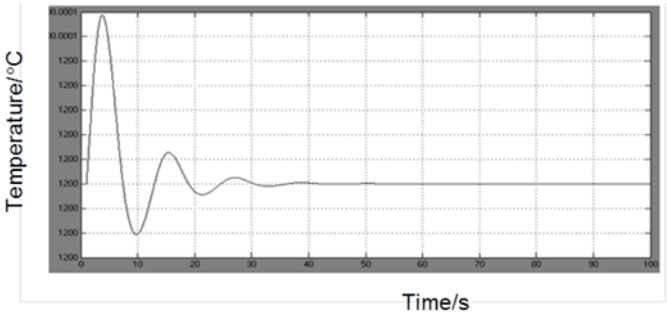

Figure 15: Transient process graph of system regulation with a fuzzy regulator by the temperature at the kiln output

Table 3: Quality control indicators at fuzzy - regulator use

Regulation period, s	Re-adjustment, %	Variability indicator	Attenuation degree, %
35	0,571	0,000175	1,74

In order to evaluate the work of models of the nickel oxide recovery roasting in the control systems presented on Figure 10, 12, and 14, oscilloscope blocks (Scope) were installed, which show the reactions of objects through the control channels (Figures 11, 13, 15).

For the convenience of transfer process regulator graph comparison using all the systems under consideration, the regulation is presented on the same graph (Figure 16).

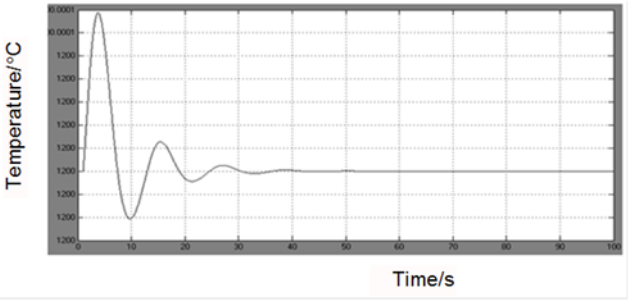

Figure 16: System regulation transient process diagrams by temperature at the kiln output with PID regulator (black line), the Smith regulator (red line), and the fuzzy regulator (blue line)

Also, for the ease of control system comparison, the regulation quality indicators are summarized in one table (Table 4).

Table 4: Regulation quality indicators

Regulation quality indicators / Regulation systems	Regulation period, s	Re-adjustment, %	Variability indicator	Attenuation degree, %
PID regulator	65	18,9	1,85	0,113
Smith regulator	40	8,33	1,2	0,23
Fuzzy regulator	35	0,571	0,000175	0.174

Fig. 16 shows that only PID regulator gives an incomparably greater amplitude of temperature oscillations and a longer time to reach the set temperature (65 seconds) by the system. Consequently, only two control systems are sufficient for further comparison: the Smith regulator and fuzzy regulation.

The time when the systems reach the set value with the Smith regulator and with fuzzy-regulation is almost the same one, it differs in 5 seconds (40 seconds and 35 seconds, respectively). On the basis of the vibrational index, the system with fuzzy regulation behaves better. It also has a lower degree of process attenuation (0.174%).

If we compare Figure 15 and 16, we can see that Fig. 15 has the graph of the system transient process with the fuzzy-regulator and it is represented by a straight line, but Fig. 15 demonstrates slight oscillation amplitudes. We can say that the process goes smoothly

without overregulation. The system almost instantly reaches the set mode at 1200 °C.

Figure 15 shows that with the system regulating the process of nickel oxide restorative roasting, using a fuzzy regulator, the number of transfer function oscillations is greater than at the control with PID regulator and with the Smith controller. But, it should be noted that the amplitude of these oscillations is negligible.

6. Summary

The purpose of controlling the process of nickel oxide restorative roasting in a tube-type rotary kiln is to obtain a ground concentrated nickel powder for its further processing in electric furnaces. In order to obtain a nickel powder of a certain size, it is necessary to maintain the kiln temperature at a predetermined level. Thus, we analyzed different control systems and used various regulators: the PID regulator, the Smith regulator, and a fuzzy regulator. The analysis showed, that the control system of nickel oxide restorative roasting in the TRK with a fuzzy regulator is the most optimal one in comparison with the other systems under consideration. However, the system with fuzzy-regulation is complex in implementation. In order to perform a fuzzy operation, the regulator needs more time than PID regulator or Smith regulator. But this is not a significant drawback of this control device, which is not considered as the quality indicator of system regulation.

References

[1] Zhunusov M.T. Metallurgy of nickel at "Severonickel" plant. / Zhunusov M.T., Sinko A.V., Maltsev N.A. / Selected lectures, 1994. - 153 p.
[2] Metallurgy of copper, nickel and cobalt. V.2. / I.F. Khudyakov, A.I. Tikhonov, V.I. Deev, S.S. Naboichenko. - Moscow: Metallurgy, 1977. - 263 p.
[3] Y.Sharikov, F. Sharikov, O. Titiv. Mathematical modeling of the processes in the tubular rotatry kiln. LAP, Lambert Academic Publishing, AV Akademikverlag, GmbH & Co, KG Heinrich-Boecking-Str. 6-8, 662121, SaarBruecken, Deutschland, Germany, 2013.
[4] Matzopoulos M. Dynamic Process Modeling: Combining Models and Experimental Data to Solve Industrial Problems. // *Process Systems Engineering*: *Vol. 7 DynaIfhbrjmic Process Modeling.* Edited by M.C. Georgiadis, J.R. Banga and E.N. Pistikopoulos. ©2011 WILEY-VCH Verlag GmbH & Co.
[5] Asprey S.P., Macchietto S. Statistical tools for optimal dynamic model building. // *Computers and Chemical Engineering* 24 (2000), P. 1261–1267.
[6] Schneider R., Sander F., Gorak A. Dynamic simulation of industrial reactive absorption processes. // *Chemical Engineering and Processing* 42 (2003), P. 955–964.
[7] Foss B.A., Lohmann B., Marquardt W. A field study of the industrial modeling process. // *Journal of Process Control,* 8 (1998), P. 325–338.
[8] Yu.V. Sharikov, I.N. Beloglazov, The modeling of systems. Part 1. Synthesis of technological object models on the basis of equations of hydrodynamics and chemical kinetics, St. Petersburg Mining University, St. Petersburg, 2011., 108 p.
[9] Yu.V. Sharikov, I.N. Beloglazov, The modeling of systems. Part 2. The methods of mathematical model numerical realization. St. Petersburg Mining University, St. Petersburg, 2012., 118 p.
[10] Fedorov A.F., Kuzmenko E.A. Control systems for chemical-technological processes: the manual. - Tomsk: Publishing house of Tomsk Polytechnic University, 2009. - 224 p.
[11] T. Ya. Lazareva, Yu. F. Martemyanov. Fundamentals of Automatic Control Theory, Tambov, TSTU Publishing house, 2003
[12] Encyclopaedia of ACS TP [Electronic resource]. www.bookasupt.ru/Chapter5_5.aspx (Reference date 06.06.2015).
[13] Matlab. Exponenta. Competence center MathWorks [Electronic resource]. http://matlab.exponenta.ru/simulink/book3/6.php (Reference date 24.06.2015).
[14] Matlab. Exponenta. Competence center MathWorks [Electronic resource]. http://matlab.exponenta.ru/fuzzylogic/book1/1_7.php (Reference date 23.06.2015).
[15] Matlab. Exponenta. Competence center MathWorks [Electronic resource]. http://matlab.exponenta.ru/fuzzylogic/book1/7_1.php (Reference date 23.06.2015).
[16] Competence center MathWorks [Electronic resource]. http://matlab.ru/products/matlab (Reference date 30.06.2015).