International Journal of Engineering &Technology, 7 (3.12) (2018) 661-665

International Journal of Engineering & Technology

Website: www.sciencepubco.com/index.php/IJET

Research paper



An Efficient Approach for Secure Storage, Search using AES in Cloud Storage

P Anjaiah[1], C. Raghavendra[2], K. Rajendra Prasad[3]

[1, 2, 3]*CSE Department, Institute of Aeronautical Engineering, Hyderabad*
**Corresponding Author E-mail: crg.svch@gmail.com*

Abstract

The expanded rate of development and adaption of distributed computing, day by day, more delicate data is being brought together onto the cloud. For the security of profitable data, the information must be encoded before externalization. The current inquiry procedures enable the client to seek over encoded information utilizing keyword yet these methods represent just correct hunt. There is no resilience for grammatical errors and organization irregularities which are typical client conduct. This makes compelling information stockpiling and use an exceptionally difficult errand, providing client seeking extremely baffling and wasteful. In this paper, we concentrate on secure capacity utilizing Advanced Encryption Standard (AES) and data recovery by performing Fuzzysearch on information which is scrambled while transferring on the cloud. We are proposing the execution of a progressed Fuzzykeywordtechnique called the Wildcard based procedures which restores the coordinating records when clients seeking inputs definitely coordinate the predefined keyword or the nearest conceivable coordinating documents in light of likeness catchphrase semantics when correct match comes up short. In the proposed method, using alter separation to measure keywords similitude and build up a proficient strategies for developing fuzzy keyword sets, which concentrate on diminishing the capacity and portrayal overtop.

Keywords: *Fuzzy inquiry, encryption on cloud, distributed computing, AES, trump card.*

1. Introduction

Distributed computing is a fundamental stage for sharing assets. This sharing of assets depends on three models: Infrastructure-as-a-benefit (IaaS), Platform-as-a-benefit (PaaS), Software-as-a-benefit (SaaS).These administrations are tweaked according to client request. Distributed computing all the more ideally alluded as "the cloud", likewise concentrates on expanding the adequacy of shared assets. Typically cloud assets are shared by numerous clients as well as reallocated according to the client request. The capacity of information on cloud decreases the weight of capacity and upkeep of information on the client. Considering this colossal development of touchy data on cloud, cloud security is of indispensable significance for endeavours. The way that the data proprietors and merchant provisioned cloud servers are not a piece of the same trusted space may put the outsourced information in danger. This development of cloud servers are not a piece of the same trusted area may put the outsourced information in danger. This development of cloud benefit clients has shockingly been went with a development in pernicious movement in cloud. An ever increasing number of vulnerabilities are being examined consistently. A large number of clients are subscribing to the cloud based administrations, in this way wellbeing and security of these administrations are of most extreme significance. The eventual fate of cloud, considerably more in growing scope of utilizations, includes a substantially more profound degree confirmation and protection. Proposed here is a straightforward information insurance display where information is scrambled utilizing Advanced Encryption Standard (AES) before it is propelled into the cloud, accordingly guaranteeing information secrecy and security.

To guarantee security amid data recovery, we are utilizing an accessible encryption mechanism.in a standard accessible encryption plot, a file is made for each catchphrase of intrigue and it is related with the documents that contain the keyword. The trapdoors of the keyword are incorporated with the list data, accordingly powerful catchphrase look is acknowledged without trading off document content. During a time of wise inquiry frameworks, the standard accessible encryption plot supporting a correct catchphrase coordinate is conflicting with easygoing client look practices. Typical client seek inquiries will have grammatical errors and portrayal inconsistencies which may not coordinate the pre-set keyword strings. A client looking for "APPLE" can inadvertently sort "APLE" and someone else may question for "P.O.BOX" on the grounds that he is insensible about the put away keyword.

In this manner, we move our attention on empowering viable protection safeguarding Fuzzy catchphrase look for data put away in cloud situations. Fuzzykeywords seek expands framework convenience by restoring the coordinating documents when clients looking information sources precisely coordinate the pre-characterized keyword or the nearest conceivable coordinating records in light of keyword similitude semantics, when correct match fizzles. Alter remove is utilized to measure keyword likeness and for the improvement of the novel strategy, i.e., a special case based system, for developing Fuzzykeyword sets. This procedure disposes of the requirement for tallying all the Fuzzykeyword and the aggregate size of the Fuzzykeywords set is fundamentally diminishes.

Copyright © 2018 Authors. This is an open access article distributed under the Creative Commons Attribution License, which permits unrestricted use, distribution, and reproduction in any medium, provided the original work is properly cited.

2. Related Work

Plaintext Fuzzy Keyword Search

Right now a significant part of the significance is given to Fuzzy scan for plain content with the assistance of Fuzzy catchphrase look by numerous groups [2]. This issue was illuminated by dismissing utilizing of attempt and see approach for seeking related work and rather utilizing string coordinating calculations. Be that as it may, again this technique needs as far as protection as programmers may apply measurable or vocabulary assault and increase unapproved access to the records.

Accessible Encryption

Conventional accessible encryption [3-9], [11] has been of much significance in cryptography. In this approach each word is scrambled autonomously under two layer encryption develop to give security. Sadly, the plan isn't secure against factual examination over various questions and can release the places of the questioned keywords in a record. The looking overhead is direct since each word in the record is encoded freely. To accomplish more effective pursuit, Goh [5] set forward to utilize Bloom channels to develop the record for each document a makes this influence the hunt to conspire autonomous of the document encryption. Likewise, the intricacy of each pursuit ask for is around corresponding to the quantity of records in the gathering. A. Behm [12] proposed the formal security idea of accessible encryption. Besides, they set forward comparable "list" approaches, where one scrambled hash table file is developed for the whole document accumulation. In the file table, each passage comprised of the trapdoor of a keyword and an encoded set of related record identifiers. Bao et al. [10] additionally proposed an accessible encryption conspire in multi-client setting, where a gathering of clients can share information in a way that can contribute accessible substance and can look through a scrambled document accumulation without unveiling their privileged insights. [13-17]

Finish Search

In total inquiry client sorts the catchphrase letter by letter and framework recovers every one of the records that contain the keyword.

3. Proposed System

Primary Modules

- AES Encryption
- Wildcard-Based Technique
- Grams-Based Technique

AES is a piece figure that has square length of 128 bits. Three distinctive key lengths are permitted in it i.e. 128, 192, or 256 bits. We propose AES with 128 piece key length. The encryption procedure is of 10 rounds of handling for 128-piece key. But of the last round in each of the case, every single other round are identical.16 byte encryption key, as 4-byte words is ventured into a key timetable comprising of 44 4-bytes words. The 4X4 network of bytes produced using 128-piece input square is alluded to as the state exhibit. Before any round-based handling for encryption can start, input state is XORed with the initial four expressions of calendar. The significance of Fuzzy pursuit has gotten consideration in the acknowledgment of plaintext hunting down data recovery. This issue was tended to by enabling client to look applicable data in view of estimated string coordinating. It appears to be workable for one to specifically apply these string coordinating calculations to the setting of accessible encryption by figuring the trapdoors on a character base inside a letters in order. Be that as it may, this straightforward development experiences word reference and measurable assaults because of absence of security safeguarding encryption strategies. Among the accessible encryption methods, the greater part of those works are centredaround productivity enhancements and formalization of security definitions. Accessible encryptions first development was proposed by melody at al, in which each word in the report is encoded autonomously under an exceptional two layered encryption development. Goh proposed to utilize blossom channels for developing the lists for information fiels.to accomplish more proficient inquiry, Chang et al And Curtmole et al both proposed comparative methodologies in which a solitary encoded hash table list is worked for the entire of document gathering. In this every section comprises of the trap-entryway of a keyword and an encoded set of record identifiers whose relating information documents contain the catchphrase. A reciprocal approach was introduced by Boneh el al as an open key based accessible encryption plot. Proposed Work.

Distributed computing is a build that enables you to get to applications that really dwell a remote area. Distributed computing utilizes the web and focal remote servers to keep up information and applications; the information is put away in off-premises and getting to this information through keyword seek. Encryption on information in cloud is finished utilizing the Advanced Encryption Standard (AES) calculation. The client chooses to cloud benefits and outsource his information on the cloud. Client presents his administration prerequisites with Could Service Providers (CSPs) and picks the supplier offering best determined administrations. To completely misuse capability of distributed computing there ought to be constrained limitations on handling and calculation. This conceivable when we empower scrambled information look. For this, there exists a model where CSP's can incompletely get to the information without undoing the encryption. Refreshing, questioning or sharing a dataset without releasing any data to the cloud supplier is conceivable.

Enactment of fuzzy keyword search

We propose a situation where a private endeavour might want to unify its information stockpiling to 5s5cloud.The venture information records are scrambled utilizing AES and outsourced to distributed storage. In the meantime the accompanying data is put away in a FILE INDEX: a) File ID. b) File name. c) Keywords. We determine out Fuzzy keyword sets from this FILE INDEX utilizing Edit Distances and Wild-Cards area. These Fuzzy keyword sets related with their particular record recognizable pieces of proof. On the Fuzzy Keyword Sets created, the trap-entryway work is connected. The keyword trapdoors and File IDs are currently outsourced to distributed storage. Presently, the venture adds clients who are approved to get to their information. The client enters a look inquiry for record recovery. The trapdoor work is connected on the pursuit words and contrasted and the current keyword trapdoors. The applicable coordinating records are gotten and client chooses his/her document of intrigue. The chose document is then decoded and made accessible for the client.

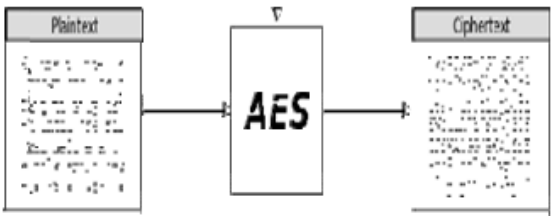

Fig. 1: Advance Encryption Standards

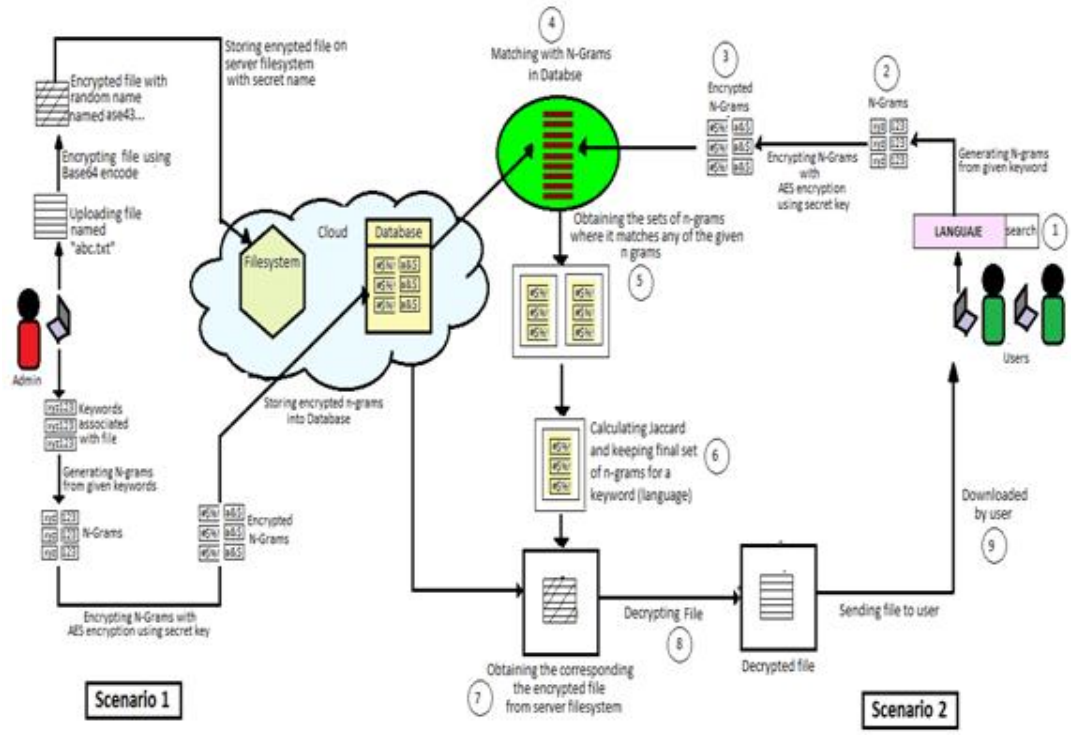

Fig. 2: Proposed Architecture

4. Methodology

1. Wildcard Based Fuzzy Set Construction

In a direct approach, each and every one of the variations of the watchwords must be recorded regardless of the possibility that an operation is performed with different examples on one position. In view of this, we proposed to utilize a special case to mean alter operations at a similar position. The fluffy set (in view of the trump cards) of wi with alter remove d is indicated as S wid={S 'wi, S' wi,1, … , S' wi,d}, where S' wi,t means the arrangement of words W' I with t special cases. Here, each trump card speaks to an alter operation on wi. For instance, for the catchphrase APPLE with the pre-set alter separation of 1, its fluffy watchword set in view of special cases can be developed as Sapple,1 = {APPLE, *APPLE, *PPLE, A*PPLE, A*PLE, APPL*E, APPL*, APPLE*}. The aggregate no of variations on APPLE built on along these lines is just 13 + 1, rather than 13 x 26 + 1 as in the above comprehensive count approach when the alter remove set as 1. For a given watchword wi, by and large, with length l, the span of Swi,1 will be just 2l +1+1, when contrasted with (2l + 1) x 26 + 1 acquired by utilizing the direct approach. Bigger the pre-set alter remove, increasingly the capacity overhead which can be lessened: with an indistinguishable setting of the case from showed in the clear approach, the proposed procedure can help diminish the capacity of the list from 30GB to down to almost 40GB. If there should be an occurrence of the alter remove being set to 2 and 3, the extent of Swi,2 and Swi,3 will be Csqr1l + 1 + Csqr1l * 2Csqr2l + 2 and Csqr1l + 1 + Csqr3l + 2Csqr2l + 2Csqr2l * Csqr1l. As it were, the number is O(lsqrd) for the catchphrase with length l and alter separate d.

5. The Efficient Fuzzy Keyword Set Construction Scheme

In view of the capacity proficient fluffy watchword sets, we demonstrate the development of a productive and compelling fluffy catchphrase seek conspire. The fluffy watchword look conspire goes like:

1) To form a record for wi, having an alter remove d, the information proprietor should first build a fluffy watchword set Swi, d utilizing the trump card based procedure. At that point he figures trapdoor set {Tw'i} for each w'i E Swi, d with a mystery

key sk shared between information proprietor and approved clients. The information proprietor encodes FID wi as Enc(sk,FIDwi || wi). The record table {({Tw'i}w'i E Swi,d, Enc(sk, FIDwi || wi))}wi E w and scrambled information documents are outsourced to the cloud server for capacity;

2) To hunt with (w, k), the approved client processes the trapdoor set {Tw'} w'ESw, k, where Sw, k is likewise gotten from the trump card based fluffy set development. He at that point sends {Tw'}w'ESw, k to the server;

3) Upon the accepting the inquiry ask {Tw'} w'ESw, k, the server contrasts them and the file table and returns all the conceivable encoded document identifiers {Enc(sk,FIDwi || wi)} in view of the meanings of the fluffy catchphrase. The client would then be able to decode the returned comes about and recover pertinent records. The strategy of building look ask for w is the same as the development of a catchphrase list. Along these lines, the hunt ask for is a trapdoor set on the premise of Sw, k, rather than a solitary trapdoor of the clear technique. Going in this way, the looking outcome accuracy can be guaranteed. Conclusion and Future Scope

Later on extent of this framework we will do the ordering of the mapped words and fluffy sets to build the usefulness of the inquiry strategy. Encryption of more record arrangements should be possible. Additionally decoding of picture and media records should be possible. In this paper we plan to make a security saving fluffy scan for accomplishing viable utilization of remotely put away encoded information in mists figuring. We are outlining a propelled seek calculation system (i.e. Trump card Based Technique) for building stockpiling proficient fluffy catchphrase sets in view of the similitude metric alter separate. In view of the fluffy catchphrase sets, we propose a fluffy watchword seek strategy.

6. Results

The idea of this paper is executed and diverse outcomes are demonstrated as follows. The proposed paper is executed in .net innovation on a Pentium-IV PC with 20 GB hard-circle and 256 MB RAM with apache web server.

The propose paper ideas indicates productive outcomes and has been proficiently tried on various Datasets. The Fig 1 portrays fluffy set development time utilizing separation equivalent to 1, Fig 2 depicts fluffy set development time utilizing separation equivalent to 2, Fig 3 demonstrates the hunting time down alter remove equivalents to 1 and Fig 4 demonstrates the hunting time down alter remove equivalents to 2 are the constant outcomes thought about.

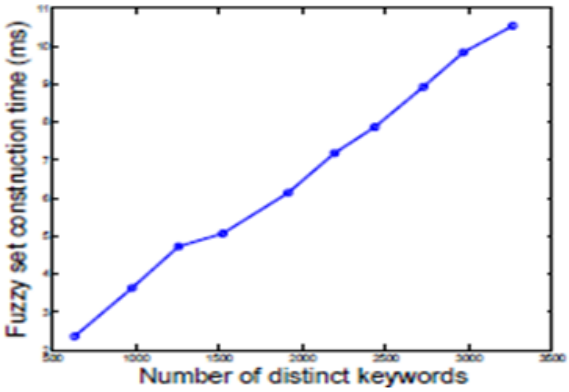

Fig. 3: Fuzzy set construction time using wild card distance=1

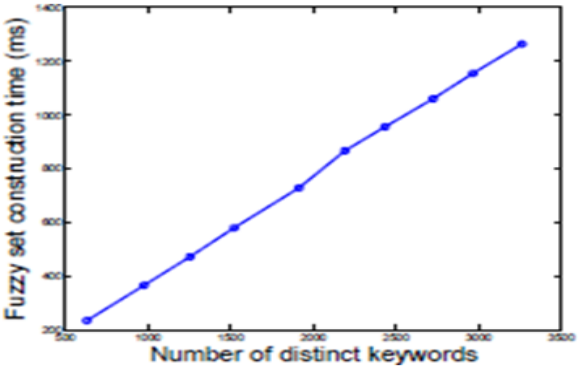

Fig. 4: fuzzy set construction using wild card distance=2

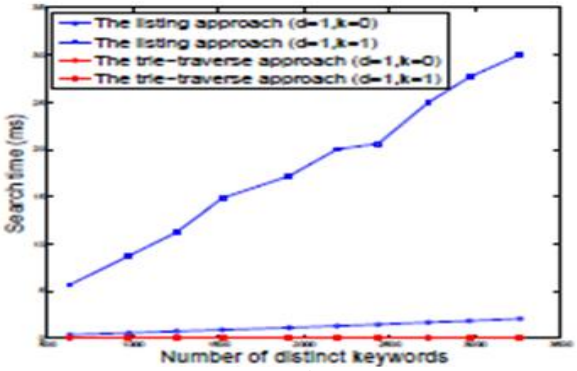

Fig. 5: Searching time for edit distance=1

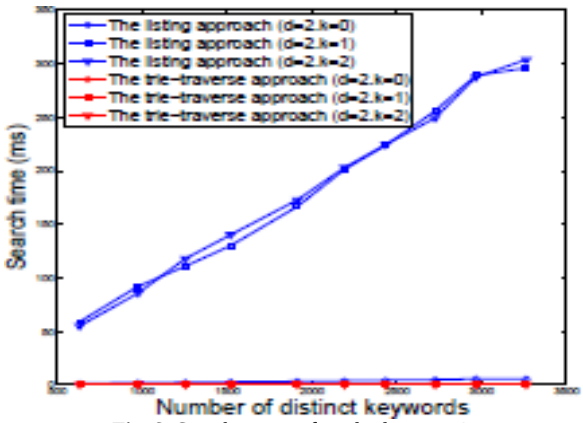

Fig. 6: Searching time for edit distance=2

7. Conclusion

In this paper, we endeavour to formalize and take care of the issue of giving effective fluffy hunt to remotely put away information in distributed computing.

We plan two further developed strategies (i.e., Gram-based and Symbol-based tree navigate seek procedures) to build effective fluffy catchphrase sets. By giving security, we demonstrate that the proposed arrangement is secure and protection saving. Test comes about show the effectiveness of our proposed arrangement.

We will keep on researching on security systems that help seek positioning that sorts the looking outcomes as per the pertinence inquiry and semantics that thinks about conjunction of catchphrases, the arrangement of watchwords, and even the mind boggling common dialect semantics to create very important query items.

References

[1] Google, “Britney spears spellingcorrection”, Referenced online at http:// www.google.com/jobs/britney.html, June 2009.

[2] M. Bellare, A. Boldyreva, and A. O’Neill, “Deterministic and efficiently searchable encryption,” in Proceedings of Crypto 2007, volume 4622 of LNCS. Springer-Verlag,2007.

[3] K.Rajendra Prasad, C.Raghavendra,Padakandla Vyshnav, “Intelligent System for Visualized Data Analytics A Review”, International Journal of Pure and Applied Mathematics, Volume 116 No. 21 2017, 217-224.

[4] E.-J. Goh, “Secure indexes,” Cryptology ePrint Archive, Report 2003/216, 2003, http://eprint.iacr.org/.

[5] D. Boneh, G. D. Crescenzo, R. Ostrovsky, and G. Persiano, “Public key encryption with keyword search,” in Proc. of EUROCRYP’04,2004.

[6] B. Waters, D. Balfanz, G. Durfee, and D. Smetters, “Building an encrypted and searchable audit log,” in Proc. of 11th Annual Network and Distributed System, 2004.

[7] C. Nalini, C. Raghavendra, K. Rajendra Prasad, “Comparative Observation and Performance Analysis of Multiple Algorithms on Iris Data”, International Journal of Pure and Applied Mathematics, Volume 116 No. 9 2017, 319-325.

[8] R. Curtmola, J. A. Garay, S. Kamara, and R. Ostrovsky, “Searchable symmetric encryption: improved definitions and efficient constructions,” in Proc. of ACM CCS’06,2006.

[9] K. Rajendra Prasad, C. Raghavendra, K Sai Saranya, “A Review on Classification of Breast Cancer Detection using Combination of The Feature Extraction Models”, International Journal of Pure and Applied Mathematics, Volume 116 No. 21 2017, 203-208.

[10] F. Bao, R. Deng, X. Ding, and Y. Yang, “Private query on encrypted data in multi-user settings,” in Proc. of ISPEC’08,2008.

[11] C. Raghavendra, Dr. A Kumaravel, A. Anjaiah, “A New Hybrid Method for Image De-Noising In Light Of Wavelet Transform”, International Journal of Pure and Applied Mathematics, Volume 116 No. 21 2017, 197-202.

[12] A. Behm, S. Ji, C. Li, , and J. Lu, “Space- constrained gram-based indexing for efficient approximate string search,” in Proc.

ofICDE'09.
[13] S. Ji, G. Li, C. Li, and J. Feng, "Efficient interactive fuzzy keyword search," in Proc. of WWW'09,2009.
[14] C. Raghavendra, A. Kumaraveland S. Sivasuramanyan, "Features Subset Selection using Improved Teaching Learning based Optimisation (ITLBO) Algorithms for Iris Recognition", Indian Journal of Science and Technology, Vol 10(34), DOI: 10.17485/ijst/2017/v10i34/118307, September 2017.
[15] R. Ostrovsky, "Software protection and simulations on oblivious rams," Ph.D dissertation, Massachusetts Institute of Technology,1992.
[16] C. Raghavendra, A. Kumaravel and S. Sivasuramanyan, "Identifying images on moving objects to enhance the recognition", Indian Journal of Science and Technology, Vol 7(1.5), pp. 279-282, December 2017.
[17] Fuzzy keyword search over encrypted data in cloud computing" by T. Balamuralikrishna.