International Journal of Engineering &Technology, 7 (3.12) (2018) 512-515

International Journal of Engineering & Technology

Website: www.sciencepubco.com/index.php/IJET

Research paper

Design & Analysis of S-Band Right Hand Circularly Polarized Conical Horn Antenna for NavIC Receiver

Likith N[1], Gayathri K M[2], Thusshara S[3], Maria Sanjeetha[4], Thangadurai N[5*]

[1, 3, 4]UG Scholars, [2]Assistant Professor, [5]Associate Professor & Head of the Department
Department of Electronics and Communication Engineering, School of Engineering and Technology,
Jain University, Bangalore, Karnataka, India
** Corresponding Author E-mail: [5]mrgoldjain2015@gmail.com*

Abstract

In satellite communication systems the horn antennas are being used widely due to its robustness and capable to operate at frequencies which are very high. Here, the right hand circular polarized conical horn antenna is designed for S-band NavIC receiver. The waveguides and conical horn antenna dimensions are designed by using standard formulas and after that they are given to a simulation tool for the S band frequency. The performance parameters like return loss, radiation pattern, gain and directivity are considered for further analysis. In the circular waveguide from the TE11 mode conical horn antenna is to be designed into high gain and a good VSWR.

Keywords: *Conical Horn, S-Band, VSWR, Right Hand Circular Polarization.*

1. Introduction

A. NavIC

The abbreviation of Indian Regional Navigational Satellite System is IRNSS which is India's own satellite navigation system which covers Indian region as well1500Kms extended from the Indian region. Fig1 represents the IRNSS coverage area. The government had approved the system in May 2006.This project was established in order to have an independent navigation system and not to depend on other country satellite system in hostile conditions. The Development of the satellite system was done by Indian Space Research Organization (ISRO) which was renamed later as NavIC Navigation Indian Constellation [1][2][10].



Fig. 1: NavIC coverage

IRNSS has three segments the first one is Space segment which consists of 8 satellites. Fig 2 represents satellites in space and Fig 3 represents the space segment [3-4].

The second segment is Ground segment in which the IRNSS system are maintained and operated. The Ground segment consists of Data communication network, Laser ranging stations, IRNSS CDMA stations, IRNSS Navigation center etc. The third segment is User segment where it has single or dual frequencies capable of receiving signals. The Fig 3 represents three segments in IRNSS.

The S Band frequency range is 2-4GHz.The wavelength range is 7.5-15cm. It is used in IRNSS, GPS, surface ship radar, weather radar etc.

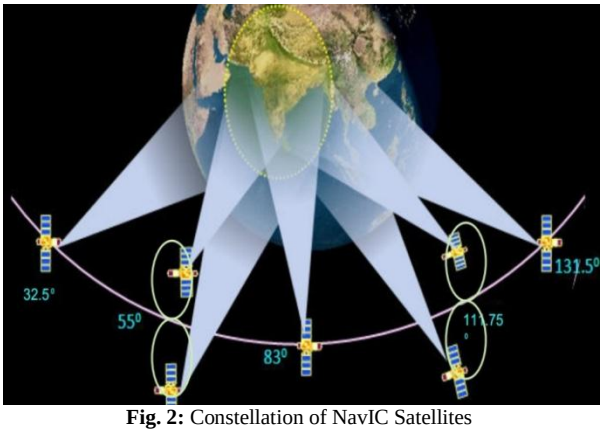

Fig. 2: Constellation of NavIC Satellites

B. Horn Antenna

Antenna is a transducer in which it transforms electromagnetic waves to alternating currents and vice versa. Horn antenna is the simplest and most commonly used microwave antennas and they find applications in the areas of communication. The Conical Horn Antenna is being fed by conical aperture and circular

Copyright © 2018 Authors. This is an open access article distributed under the Creative Commons Attribution License, which permits unrestricted use, distribution, and reproduction in any medium, provided the original work is properly cited.

waveguide. With the help of spherical coordinate system, we can estimate the traveling modes in the antenna, the Bessel Functions and the Legendre polynomials are also used. A Horn antenna is utilized as feeders for parabolic dish antenna. Moderate directivity (gain), low SWR, broad bandwidth and simple in construction and adjustment are few of their advantages. A small diameter horn where possibly the cross-polarization level is low has become an exception for this horn. The smallest mode to propagate, having a transverse field pattern is the TE11 mode which is dominant in a circular waveguide.

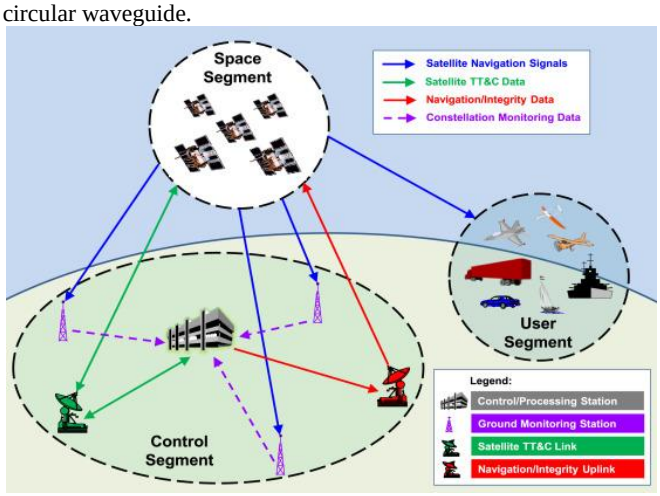

Fig. 3: Segmentation of NavIC system

Low aperture diameter has high aperture efficiency with low phase factor which results to compact size horn. The modes which are of high order are excited at the junction between the waveguide and aperture due to flare angles which are considerately large. At the junction TM11, next mode which is higher can be generated. A standard calibration antenna used for other antennas to measure their gain is the Conical Horn antenna [5-6]. Some of the applications are the microwave radiometers, automatic door openers, radar guns and etc. The flare angle goes on decreasing and the gain keeps increasing, until the gain reaches a definite limit beyond where it begins to decrease. When the flare angle reaches zero or length of horn tends to infinity, the directivity obtained maximum for constant aperture horn. For minimizing quadratic phase error, a lens is commonly placed at conical horn antenna's aperture.

The Fig 4 represents basic types of horn antenna (i.e., conical and pyramidal horn antenna). Other types include Exponential, Sectorial (E or H plane), Ridged, Corrugated and Septum Horns.



Fig 4: Pyramidal Horn and Conical Horn structures

The impedance matching will be required with radio frequency transmission lines. The transmitting waves get malfunctioned due to frequency and standing waves leads to increased losses. The impedance at the interface of transmission of microwave changes abruptly, when one considers a waveguide without a horn in operation due to sudden interface of the free air or conductive walls. The reflections, losses and standing waves are the resultants obtained. The process has a tendency to accept that of a horn-less antenna thereby resulting in losses, reflection and standing wave when the flare angle becomes too enormous and when it goes to 90 degrees. In design, for different horn types, there is an optimum flare angle where all the said problems remain very negligible. Horn antenna designed with the optimum flare angle is referred to be the optimum Horn [7-9].

Horn antenna shape is like a horn to direct the waves in a beam. For parabolic antenna structures horns are used as feed which provide low standing wave ratio, high directivity and broad bandwidth. The conical horn antenna is utilized as its construction is simple, directivity is high, bandwidth is about 10% and the conical horn antenna with a parabolic reflector can provide high gain.

If the waves are in clockwise direction that is towards the propagation direction then it is called as Right Hand Circular Polarization (RHCP). RHCP is used because it reduces interference and gives a clear signal where the signal strength is not lost, signal degradation will be less during weather conditions. The satellites transmit LHCP signals where this signal reflect the ground and transmit RHCP signals. Fig.5 represents RHCP.

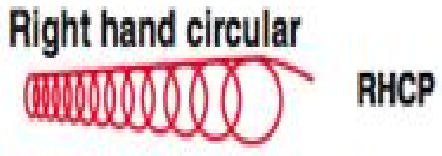

Fig. 5: RHCP

2. Design Specifications

A. Dimensions:

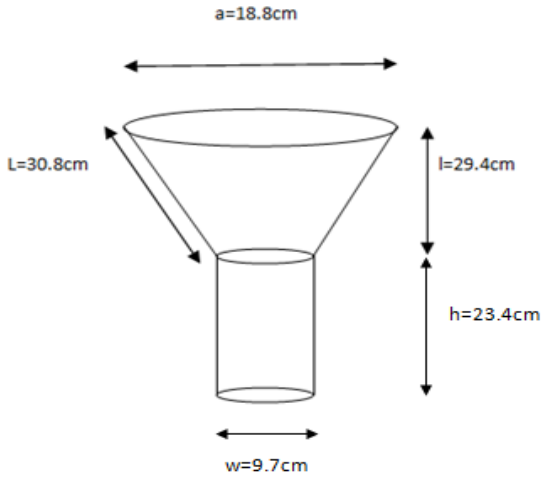

Fig. 6: Dimensions of Conical horn Antenna

B. Mathematical Representation

1. VSWR

$$VSWR = \frac{1+|\gamma|}{1-|\gamma|} \quad (1)$$

2. Reflection co-efficient:

$$|\gamma| = \frac{VSWR-1}{VSWR+1} \quad (2)$$

3. Reflected power (%):

$$RF\% = 100 * |\gamma|^2 \quad (3)$$

4. Reflected power(dB):

$$RF(dB) = 10log_{10}|\gamma|^2 \quad (4)$$

5. Non-reflected power:

$$|\tau| = 1 - |\gamma|^2 \quad (5)$$

6. Mismatch loss:

$$ML(dB) = 10log_{10}|\tau|^2 \quad (6)$$

Fig 7 is the VSWR graph obtained by simulating the conical horn in the range of 2GHz - 2.5GHz:

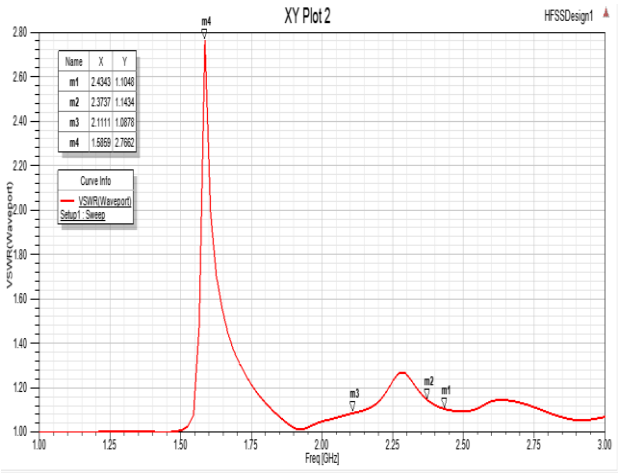

Fig. 7: VSWR plot

Table 1: Different values of VSWR for different parameters

Sl. No.	VSWR	Reflection co-efficient (γ)	Reflected power (%)	Reflected power (dB)	Mismatch loss(dB)
1.	1.1048	0.05	0.2	-26.06	0.01
2.	1.1434	0.07	0.4	-23.49	0.02
3.	1.0878	0.04	0.2	-27.52	0.01
4.	2.7662	0.47	22	-6.58	1.08

The antenna is designed to operate at a center frequency of 2.4GHz. The VSWR plot obtained by the simulation of the designed antenna shows minimal reflections between 2.1GHz – 2.5GHz which in turn imply minimum losses. Apart from the frequency range mentioned above, losses are quite significant at other operating frequencies as shown in the graph above.
From the Table1 we can observe the variations in the power loss and the reflected power for different VSWR values.

C. Gain Calculations

For L=30.8 cm, f= 2.4GHz,

Wave length:$\lambda = \frac{c}{f}\lambda = \frac{3x10^8}{2.4x10^9} = 0.125m$ (7)

Diameter: $d = \sqrt{3\lambda L}\; d = 0.33m$ (8)

Gain:$G = \left[\frac{\pi d}{\lambda}\right]^2 E_a$

Where E_a= Efficiency 0.5

$G = 34.35$

$G = 15.36dB$ (9)

3. Results and Discussions

The chosen horn antenna specification has been designed in antenna simulation tool. The geometric structure is shown in Fig. 8. The Fig.9 and Fig 10 shows the rectangular gain plot and 3D radiation pattern respectively.

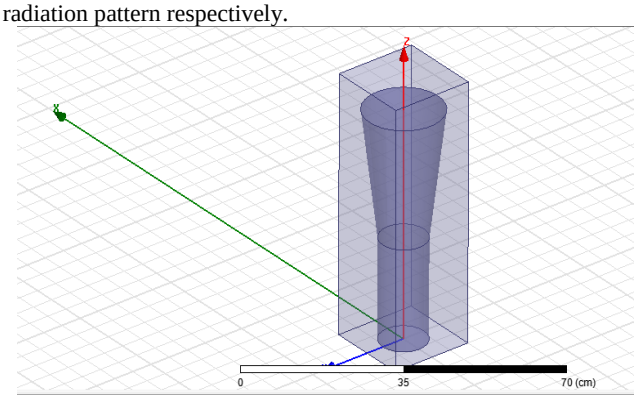

Fig. 8: Geometric Representation of Conical Horn Feed

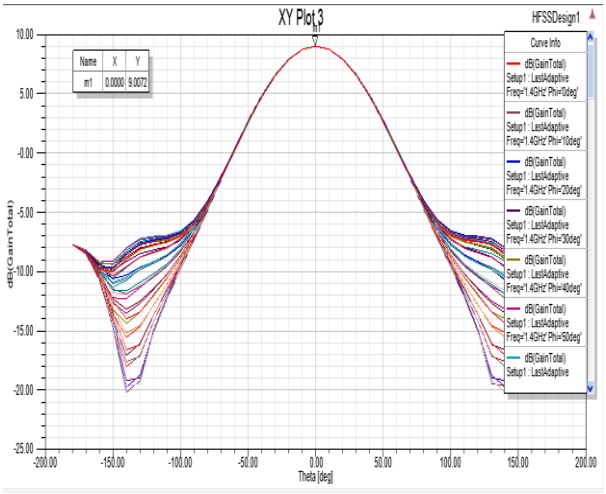

Fig. 9: Rectangular Gain plot showing gain of 9.0072dB

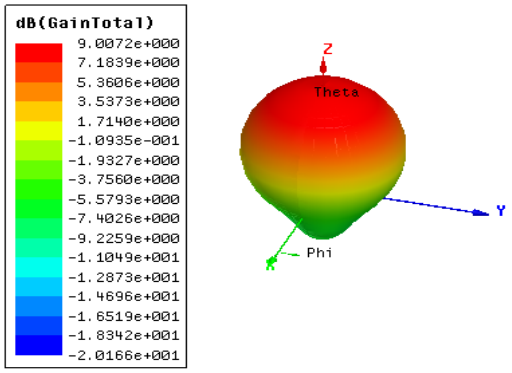

Fig. 10: 3D Radiation Pattern for simulated frequency of 2.4GHz

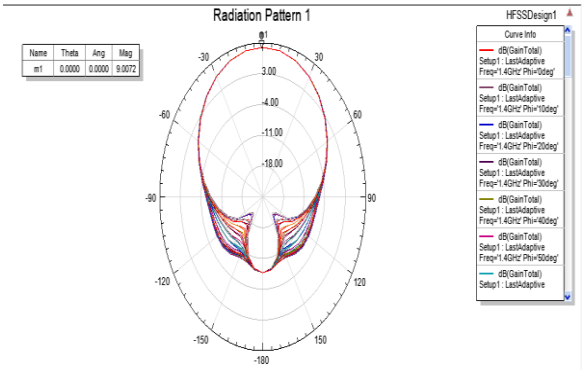

Fig. 11: Radiation pattern showing gain of 9.0072dB

There are some parameters which verify the obtained simulation results of the designed antenna such as gain, polarization, directivity, beam width, impedance matching, front lobe to side-lobe ratios, etc. The parameters can be calculated theoretically and can be verified with the simulation results. The 2D simulation radiation rectangular plot Fig. 9, shows suppressed side lobes level of -20 dB and gain of 9.0072dB. For optimum antenna design the side lobe power must be as low as possible which ensures that all the energy supplied to the antenna is focussed on the main lobe. Fig 11 shows the 2D radiation pattern.

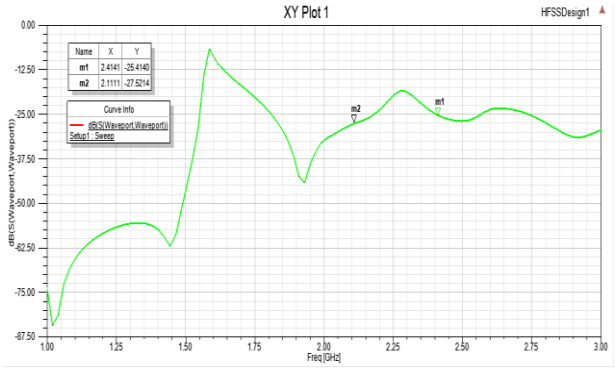

Fig. 12: S Parameter Plot

Fig 12 shows the plot for S Parameter which has values of -25.414 and -27.5214 for frequencies of 2.4141GHz and 2.1111GHz respectively. The desirable value of S Parameter is usually below -15dB.

4. Conclusion

This paper discusses about the design and analysis of the S-band right hand circular polarized conical horn antenna for NavIC receiver. The theoretical design is done using relevant formulae and the physical design on the simulation tool, which results in a gain of 9.0072dBfrom the simulation of the antenna and 15.36dB theoretical gain at an operating frequency of 2.4GHz. The desired S parameter value is -15dB or lesser and the simulation yields a value of -25.414dB at the operating frequency, this shows that there are minimum losses and reflections in the operating frequency. The antenna is to be fabricated and tested and the practical values are to be correlated with the obtained theoretical and simulation results.

5. Acknowledgement

This research work was carried out with the project grant sanctioned by ISRO-SAC under project ID - NGP06. Authors also thank Space Applications Centre - Indian Space Research Organisation (SAC-ISRO) for providing IRNSS receiver and encouraging us to work on navigation studies. Authors thank Dr G. Raju, Professor, Jain University, Bengaluru for his constant support to complete this work successfully. The authors acknowledge the necessary infrastructure and supporting facility provided by Jain University.

References

[1] Constantine. A. Balanis, "Antenna Theory Analysis & Design", John Wiley, & Sons INC, Third Edition.

[2] Ganeshan, A. S., Rathnakara, S. C., Gupta, R. and Jain, A. K., Indian regional navigation satellite system (IRNSS) concept. ISRO Satellite Centre J. Spacecraft Technol., vol. 15, Iss. 2, pp. 19–23, 2005,

[3] Gayathri. K M, Thangadurai. N and Vasudha M P, "Performance Analysis of IRNSS receiver signal strength and accuracy on a moving vehicle", Proceedings of International conference on Advance communication Control and Computing Technologies (ICACCCT), 2016.

[4] Gayathri. KM, N. Thangadurai and M. P. Vasudha, "Positioning and signal strength Analysis of IRNSS and GPS receiver in plain terrain along with foliage loss", Research Communications, Current Science, Vol. 112, No. 8, 2017.

[5] Gordon Maythew, Ridgers, Johann W. Odendaal, Johan Joubert, "Horn antenna Analysis as Applied to the Evaluation of the Gain Transfer Method", IEEE transaction on Instrumentation and Measurement, Vol. 49, No.5, 2000.

[6] Gurpinder Singh, Deepinder Singh, "Design and Analysis of Conical Horn Antenna for Ku-Band Applications", International Journal of Science and Research, Vol. 3 Iss. 7, pp 1729-1733, 2014.

[7] ISRO, Indian Regional Navigation Satellite System Signal In Space ICD for Standard Positioning Service (Version 1.0, ISRO-IRNSSICD-SPS-1.0), Indian Space Research Organization, 2014.

[8] John D. Kraus, Ronald Marhefka and Ahmad Khan "Antennas and Wave Propagation" Special India Edition, McGraw Hill Education, Fourth edition.

[9] Thangadurai N, Vasudha M P "A Review of Antenna Design and Development for IndianRegional Navigational Satellite System" Proc. of IEEE International Conference onAdvanced Communication Control and Computing Technologies (ICACCCT), Ramanathapuram, pp.299-306, 2016.

[10] Vasudha. MP and G. Raju, "Comparative Evaluation of IRNSS Performance with Special Reference to Positional Accuracy," in Gyroscope and Navigation, Vol. 8, Iss. 2, pp. 136-149, 2017.