International Journal of Engineering &Technology, 7 (3.12) (2018) 19-22

International Journal of Engineering & Technology

Website: www.sciencepubco.com/index.php/IJET

Research paper



Modeling Transport Layer Protocol Behaviour to Improve Data Center Network Performance

Amitkumar J. Nayak [1], Amit P. Ganatra[2]

[1]*Assistant Professor, IT Department, CSPIT, Gujarat, India*
[2]*Professor (Principal), Devang Patel Institute of Advance Technology & Research, Gujarat, India*
**Corresponding Author Email: [1]amitnayak.it@charusat.ac.in*

Abstract

Today, there is a generalized standard usage of internet for all.The devices via multiple technologies that facilitates to provide few communication methods to scholars to work with. By forming multiple paths in the data center network, latest generation data centers offer maximum bandwidth with robustness. To utilize this bandwidth, it is necessary that different data flows take separate paths. In brief, a single-path transport seems inappropriate for such networks. By using Multipath TCP, we must reconsider data center networks, with a diverse approach as to the association between topology, transport protocols, routing. Multipath TCP allows certain topologies that single path TCP cannot use. In newer generation data centers, Multipath TCP is already deployable using extensively deployed technologies such as Equal-cost multipath routing. But, major benefits will come when data centers are specifically designed for multipath transports. Due to manifold of technologies like Cloud computing, social networking, and information networks there is a need to deploy the number of large data centers. While Transport Control Protocol is the leading Layer-3 transport protocol in data center networks, the operating conditions like high bandwidth, small-buffered switches, and traffic patterns causes poor performance of TCP. Data Center TCP algorithm has newly been anticipated as a TCP option for data centers which address these limitations. It is worth noting that traditional TCP protocol.

Keywords: *Data Center Network, Transport Protocol, Multipath Transport, Data Center TCP, Multipath TCP.*

1. Introduction

TCP is the leading protocol on the Internet and has demonstrated its scalability to operating conditions of the network. TCP is leading Layer-3 transport protocol in the data centre situation, particularly in cloud computing data centres. However, its performance in the data centre is of poor, and the prime reason is the small-buffered and high-speed switches used in the data centre. Also, the types of traffic of applications in data centers are quite different from WAN; data centre applications produce a mixture of burst traffic, short Messages, and often have firm deadlines for the completion of those data traffic In the last decade, data centres have dominated the computing market. Nowadays, large data centres have thousands of servers which performs distributed applications that distribute computation and storage to thousands of machines. It is unfeasible to manually allocate tasks to machines when there are so many hosts. Though we can write applications to take benefit of locality in the data centre, huge distributed calculations are distributed across many racks of machines, with the adverse result creating bottleneck networks.

Such topologies creating bottleneck networks are in progress to be conveyed; Amazon Web Service's most recent EC2 server farm has a repetitive structure - between a few hosts, there are multi-path accessible. Regularly switches run a variation of Equal-cost multipath routing, casually hashing streams to meet cost ways to adjust the heap over the topology.

Nonetheless, with most such topologies it takes numerous synchronous TCP associations per host to produce adequate streams to verge on adjusting activity.

With more regular load levels, utilizing ECMP on these multi-arrange topologies causes flows to collide on at least one link with high probability.

The techniques used by Data Center Transport Protocol are a queue management scheme called as active queue management at the switch, based on Explicit Congestion Notification and a sender/receiver window control scheme at the source end device, which reacts to Explicit Congestion Notification marks by reducing the window size in proportion to the fraction of packets that are marked with special characteristics used for marking congestion in the packet. The performance of Data Center TCP relies on two important parameters associated with Data Center TCP protocol : (1) K, the threshold on the queue at the switch above which packets are marked with special characteristics used for marking congestion and (2) g, the weight parameter used for exponentially averaging explicit congestion notification mark values at the sender end node [01].

It has been observed that modern data center has different traffic requirements. If we classify the data center based on the type of traffic handled by the data center, then network traffic is broadly classified as under following.

Data center which handles query traffic (inflows and outflows) (very short length traffic like Google search query). Data center which handles medium range traffic (inflows and outflows) (like e commerce traffic consist of images and other relevant information).

Copyright © 2018 Authors. This is an open access article distributed under the Creative Commons Attribution License, which permits unrestricted use, distribution, and reproduction in any medium, provided the original work is properly cited.

Data center which handles heavy traffic (inflows and outflows) (like Face book).Based on the traffic handled by data centers we can take a call that some data centers are delay sensitive while some data centers are throughput sensitive.
Our goal is to fine tune transport layer protocol parameters to achieve convincing results.
Our observation says that for the above data centers if we finely tune the protocol properties then we can achieve optimistic results.

2. Datacenter TCP (DCTCP)

Explicit Congestion Notification (ECN) is an extension of the TCP/IP protocol that facilitates network congestion acknolowlegement without having packet drops as the feedback technique. ECN relies on Queue management technique as Active Queue Management (AQM) schemes like RED to keep track network congestion at a switch. When a network switch encounters congestion, it marks the Congestion Encountered (CE) bit in the Internet Protocol header, thus results in informing the endpoints about the congestion. The endpoints observe this Congestion Encountered (CE) bit feedback available in header and reduces their sending rate up to some extent [01].
DCTCP protocol is suitable for modern data center and the mechanism incorporated in DCTCP protocols helps data center network to deal with traffic requirement and shaping the network traffic which results in effective management of congestion compared to traditional TCP protocol. To address the problem of network congestion DCTCP carefully totals the one-piece ECN criticism from different parcels and various RTTs to frame a numerous piece, weighted-normal metric for estimating the window. Utilizing this metric, the senders adjust their window sizes in a smooth way, without thrashing. As a result, Data Center TCP cuts the 99th percentile of network latency in OLDIs by 29% [02].

3. Multipath TCP (MPTCP)

Multipath TCP protocol is an extension of TCP protocol. In Multipath TCP protocol it is possible to transmit data from end to end devices by creating multiple sub flows between end to end devices. Multipath TCP requires Multipath TCP capable end devices. Multipath TCP protocol gives moderately good throughput in data center because of its internal mechanism. Transport Layer Protocol available for internet may not be suitable for data center network and even inside data center; it requires different types of transport layer protocol based on the data center traffic characteristics. Multipath TCP and TCP comparison shows that Multipath TCP produces improved results in terms of throughput and lower delay. Multipath TCP protocol in the latter, the sub flows are internally identified by the source end node and destination end node IP addresses. Techniques can be used, relying on the network routing scheme used in a specific data center [03].
Once different sub-streams have been built up, the sending host's TCP stack stripes information over the sub-streams. Extra TCP alternatives enable the receiver to reorder the received information in the original form. There is no requirement for an application to know that Multipath TCP is being utilized as a part of place of TCP.

4. Comparison of TCP with MPTCP

TCP, as shown in the figure 1 one link (shown by dotted arrows) is available but it remained unused.

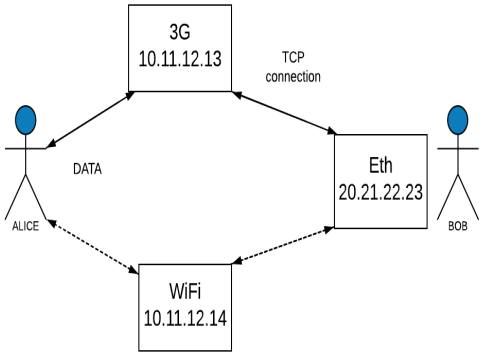

Fig. 1: Transmission of data with TCP

In MPTCP, as shown in the figure 2 all the available links are used.

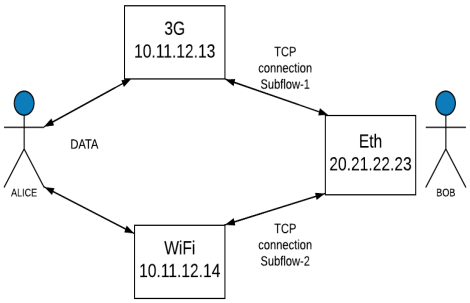

Fig. 2: Transmission of data with MPTCP

Table 1: Difference between TCP and MPTCP

	TCP	MPTCP
Bandwidth provided	Less compared to MPTCP	More
Redundancy provided	Not good as MPTCP	Better

4.1 Functionalities of MPTCP not Present in TCP

Two different sub flows are generated if one interface has both ipv4 and ipv6. One for ipv4 and one for ipv6. In the event that you have in excess of 2 association interfaces, increasingly that two paths are made. Paths that don't work are dropped after a specific time out interim.
In the event that one of the paths fails, at that point the other accessible working way is utilized to illuminate the receiver that a specific way has flopped, instead of waiting for the timeout to finish. Multipath TCP is protocol carries very good properties to deal with congestion and avoid network delay in the network.

5. Comparison of TCP with DCTCP

Table 2: Difference between TCP and DCTCP

Explicit Congestion Control Mark bits	TCP	Data Center TCP
1011110111	Reduce window by 50%	Reduce window by 40%
0000000001	Reduce window by 50%	Reduce window by 5%

Consider following results (figure 3 and 4) for better understanding of congestion window in TCP and DCTCP.

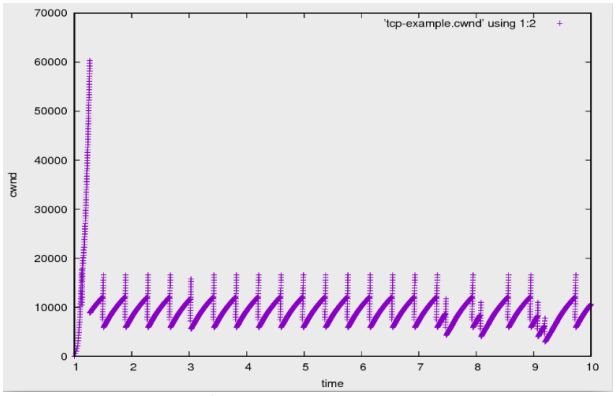

Fig. 3: TCP performance in Ns3 (Congestion Window)

TCP:

- **Sender:** reduces congestion window to half as soon as it receives ECE segment. Congestion window reduced is marked only when the host receives congestion window reduced.
- **Receiver:** Keep sending the segment with ECE until the host receives CWR (congestion window reduced) and then ECE is marked.

DCTCP:

- **Sender:** reduces congestion window using the proportion of marked bytes. When the host reduces congestion window CWR is marked.
- **Receiver:** Send a segment with ECE only when the packet is marked CE (congestion experienced) and send the immediate acknowledgment when CE state has changed.

6. Results

Experiments are based on evaluating fine tuning against the Multipath TCP protocol available in NS3.as it is said that if proper fine tuning is done then we can achieve good results. Our mail goal is to work upon the data center transport issues like outcast, delay and throughput and as a result of this our observations shows that there is a scope of improvement in the existing transport layer protocols available for data center type network.

In our simulation we have considered multipath TCP bulk send application to generate end to end traffic between two nodes. The reason behind considering bulk send application is nowadays data center network deals with the bulk traffic and major implication of bulk traffic is it will lead to congestion in the network. We have carefully fine tuned parameters of multipath tcp protocol to take benefit of multiple sub flows are created in the network which will give high throughput. The need of modern data center network is high throughput and proportionally less delay so as a result of that we can propagate the same behaviour in the live data center network.

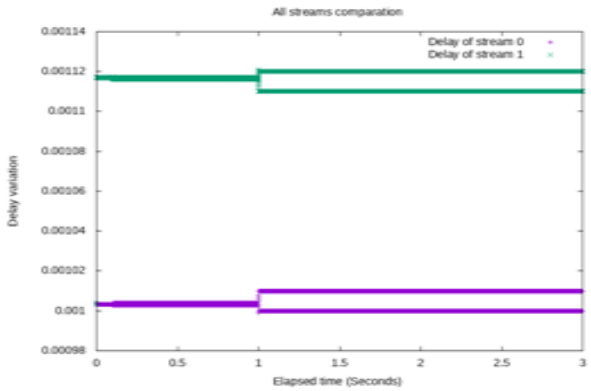

Fig. 4: MPTCP stream comparison

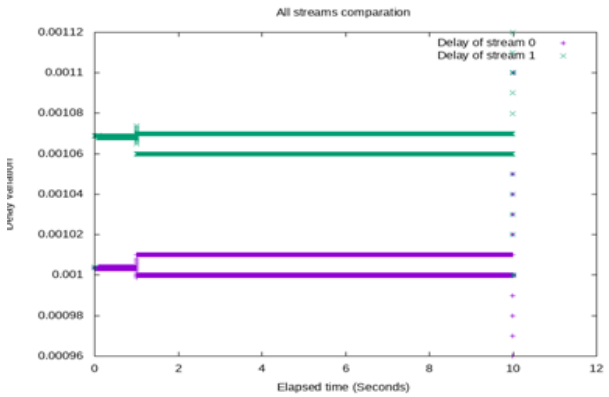

Fig. 5: MPTCP stream comparison

Figure 4 and 5 shows graph of delay variation versus time elapsed in seconds. It gives comparison of all streams. Figure 5 represents improvement in delay variation compared to figure 4.

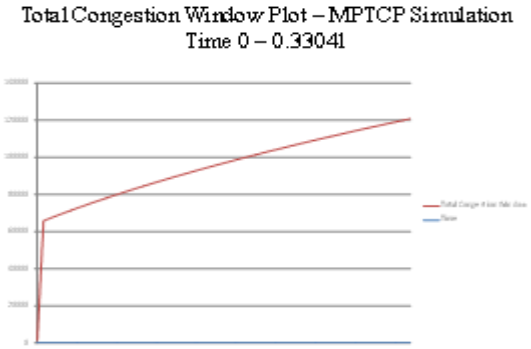

Fig. 6: MPTCP Total Congestion Window Plot
[Total congestion window vs. time]

In Network Simulator – 3 We have executed Multipath TCP script for which we have captured total congestion window which is a sum of congestion window value on all possible sub flows created under Multipath Transmission Control Protocol. The simulation runs for 10 second of time and we have gathered thousands of records for total congestion window. To demonstrate the behavior of total congestion window in MPTCP protocol for the sample topology presented as per figure number 8 we have considered fraction of total simulation time. Figure-6 and 7 is the graph of total congestion window plotted for the scenario presented in figure-8 where it is indicated that two end devices are interacting with each other by using Multipath TCP proctol. As it is seen from figure-6 and 7 that total congestion window is growing exponentially without any fluctuations.

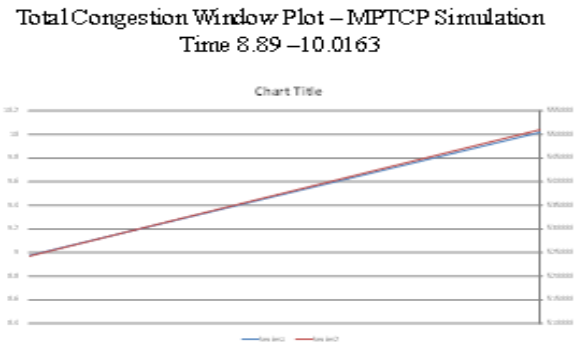

Fig. 7: MPTCP Total Congestion Window Plot
[Total congestion window vs. time]

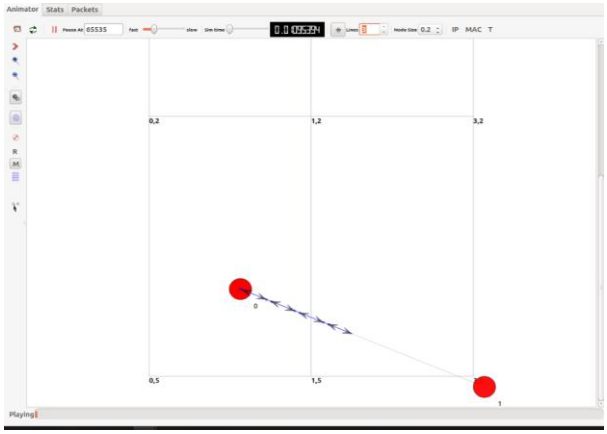

Fig. 8: MPTCP execution in Ns3

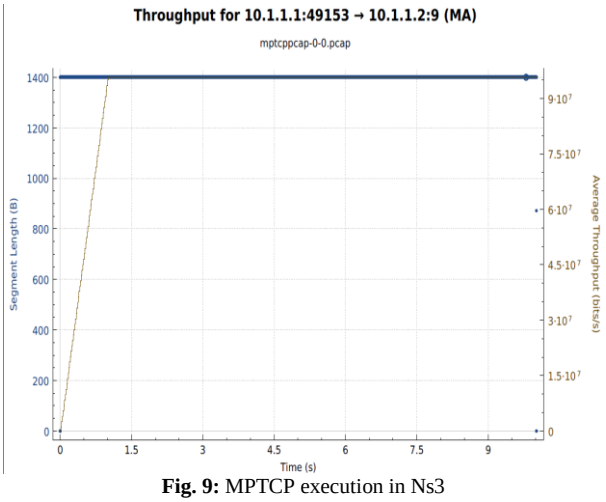

Fig. 9: MPTCP execution in Ns3

Figure-9 and 10 shows that by fine tuning the parameters like allocating more bandwidth and increasing the data rate will eventually improves throughput in Multipath Transport.

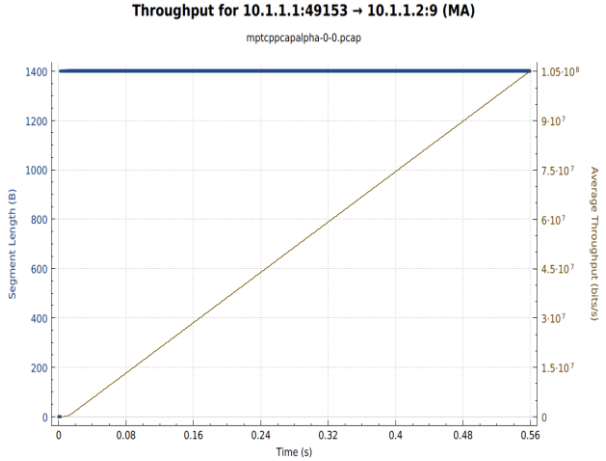

Fig. 10: MPTCP execution in Ns3

7. Conclusion

In this paper we have gone through various parameters of DCTCP and MPTCP protocols which can be fine tuned and as a result of that we can achieve optimum transport layer protocols by considering congestion control as the important parameter to improve the data center network performance. It is also important to work with one of the most important parameter of multipath tcp protocol which is how the value of alpha is calculated in multipath TCP protocol. The alpha parameter comes in to the consideration whenever multipath tcp protocol faces congestion in the network. Future researchers can modify the alpha parameter equation to add some more interesting network oriented parameters to improve the working of multipath tcp protocol which results in optimum handling of congestion control for the multipath transport.

References

[1] Mohammad Alizadeh, Albert Greenberg, David A. Maltz, Jitendra Padhye,Parveen Patel, Balaji Prabhakar,, Sudipta Sengupta, Murari Sridharan. Data Center TCP (DCTCP), SIGCOMM '10.

[2] Mohammad Alizadeh, Adel Javanmard, and Balaji Prabhakar.Analysis of DCTCP: Stability, Convergence, and Fairness. SIGMETRICS 2011.

[3] Olivier B O naventure, Mark Handley, and COstin raiCiu An Overview of Multipath TCP, USENIX 2012.